ST10 FAMILY
16 BIT MCU

USER MANUAL

1st EDITION

APRIL 1992

USE IN LIFE SUPPORT DEVICES OR SYSTEMS MUST BE EXPRESSLY AUTHORIZED.

SGS-THOMSON PRODUCTS ARE NOT AUTHORIZED FOR USE AS CRITICAL COMPONENTS IN LIFE SUPPORT DEVICES OR SYSTEMS WITHOUT THE EXPRESS WRITTEN APPROVAL OF SGS-THOMSON Microelectronics.

As used herein :

1. Life support devices or systems are those which (a) are intended for surgical implant into the body, or (b) support or sustain life, and whose failure to perform, when properly used in accordance with instructions for use provided with the product, can be reasonably expected to result in significant injury to the user.

2. A critical component is any component of a life support device or system whose failure to perform can reasonably be expected to cause the failure of the life support device or system, or to affect its safety or effectiveness.

GENERAL INDEX

INTRODUCTION

FEATURES

1 ARCHITECTURAL OVERVIEW

1.1 BASIC CPU CONCEPTS AND OPTIMIZATIONS 1-1
1.1.1 High Instruction Bandwidth/Fast Execution 1-1
1.1.2 High Function 8-bit and 16-bit Arithmetic and Logic Unit 1-2
1.1.3 Extended Bit Processing and Peripheral Control 1-2
1.1.4 High Performance Branch-, Call-, and Loop Processing 1-2
1.1.5 Consistent and Optimized Instruction Formats 1-3
1.1.6 Programmable Multiple Priority Interrupt Structure 1-3
1.2 FUNCTIONAL BLOCKS 1-4
1.2.1 16-Bit CPU 1-4
1.2.1.1 INSTRUCTION DECODING 1-4
1.2.1.2 ARITHMETIC AND LOGIC UNIT 1-4
1.2.1.3 BARREL SHIFTER 1-4
1.2.2 Peripheral Event Controller (PEC) and Interrupt Control 1-4
1.2.3 Internal RAM 1-4
1.2.4 Internal Program Memory 1-4
1.2.5 Clock Generator 1-6
1.2.6 Peripherals and Ports 1-6

2 SYSTEM DESCRIPTION

2.1 MEMORY ORGANIZATION 2-2
2.2 EXTERNAL BUS CONTROLLER 2-2
2.3 CENTRAL PROCESSING UNIT (CPU) 2-2
2.4 INTERRUPT SYSTEM 2-4
2.5 CAPTURE/COMPARE (CAPCOM) UNIT 2-4
2.6 GENERAL PURPOSE TIMER (GPT) UNIT 2-5
2.7 A/D CONVERTER 2-5
2.8 SERIAL CHANNELS 2-6
2.9 WATCHDOG TIMER 2-6
2.10 PARALLEL PORTS 2-6

GENERAL INDEX

3 MEMORY ORGANIZATION

3.1 INTERNAL PROGRAM MEMORY 3-5

3.2 EXTERNAL MEMORY 3-5

3.3 INTERNAL RAM 3-6

3.3.1 System Stack 3-6

3.3.2 General Purpose Registers 3-7

3.3.3 Pec Source and Destination Pointers 3-9

3.4 INTERNAL SPECIAL FUNCTION REGISTERS 3-10

4 ON-CHIP FLASH MEMORY 4-1

5 CENTRAL PROCSSING UNIT

5.1 INSTRUCTION PIPELINING 5-2

5.1.1 Sequential Instruction Processing 5-2

5.1.2 Standard Branch Instruction Processing 5-3

5.1.3 Cache Jump Instruction Processing 5-3

5.1.4 Particular Pipeline Effects 5-4

5.2 INSTRUCTION STATE TIMES 5-5

5.2.1 Time Unit Definitions 5-5

5.2.2 Minimum State Times 5-5

5.2.3 Additional State Times 5-6

5.3 CPU SPECIAL FUNCTION REGISTERS 5-8

5.3.1 SYSCON: System Configuration Register 5-9

5.3.1.1 INTERNAL ROM OR FLASH MEMORY/EXTERNAL MEMORY ACCESS MODE SELECTION 5-9

5.3.1.2 EXTERNAL BUS TIMING CONTROL (VIA MCTC, MTTC, RWDC) 5-9

5.3.1.3 BYTE HIGH ENABLE PIN CONTROL (VIA BYTDIS) 5-9

5.3.1.4 READY PIN CONTROL (VIA RDYEN) 5-10

5.3.1.5 CLOCK OUTPUT PIN CONTROL (VIA CLKEN) 5-11

5.3.1.6 NON-SEGMENTED MEMORY MODE SELECTION (VIA SGTDIS) 5-11

5.3.1.7 MAXIMUM SYSTEM STACK SIZE SELECTION (VIA STKSZ) 5-11

5.3.2 BUSCON1: Bus Configuration Register 5-13

5.3.3 ADDRSEL1: ADDRESS SELECT REGISTER 5-13

5.3.4 PSW: Processor Status Word 5-14

5.3.4.1 ALU STATUS (N, C, V, Z, E, MULIP) 5-14

5.3.4.2 CPU INTERRUPT STATUS (IEN, ILVL) 5-16

5.3.4.3 HOLD/HLDA/BREQ BUS ARBITRATION 5-16

GENERAL INDEX

5.3.5 IP: Instruction Pointer 5-16
5.3.6 CSP: Code Segment Pointer 5-17
5.3.7 DPP0, DPP1, DPP2, DPP3: Data Page Pointers 5-18
5.3.8 CP: Context Pointer 5-20
5.3.8.1 IMPLICIT CP USE WITH SHORT 4-BIT GPR ADDRESSES 5-20
5.3.8.2 IMPLICIT CP USE WITH SHORT 8-BIT REGISTER ADDRESSES 5-20
5.3.9 SP: Stack Pointer 5-22
5.3.10 STKUN: Stack Underflow Pointer 5-24
5.3.11 STKOV: Stack Overflow Pointer 5-24
5.3.12 MDH: Multiply/Divide Register High Portion 5-25
5.3.13 MDL: Multiply/Divide Register Low Portion 5-25
5.3.14 MDC: Multiply/Divide Control Register 5-26
5.3.15 ONES: Constant Ones Register 5-26
5.3.16 ZEROS: Constant Zeros Register 5-26

6 INSTRUCTION SET OVERVIEW

6.1 SUMMARY OF INSTRUCTION CLASSES 6-1
6.1.1 Arithmetic Instructions 6-1
6.1.2 Logical Instructions 6-1
6.1.3 Boolean Bit Manipulation Instructions 6-1
6.1.4 Compare and Loop Control Instructions 6-1
6.1.5 Shift and Rotate Instructions 6-2
6.1.6 Prioritize Instruction 6-2
6.1.7 Data Movement Instructions 6-2
6.1.8 System Stack Instructions 6-2
6.1.9 Jump and Call Instructions 6-2
6.1.10 Return Instruction 6-2
6.1.11 System Control Instructions 6-2
6.1.12 Miscellaneous 6-3
6.1.13 Software Instruction Set 6-3
6.2 ADDRESSING MODES 6-3
6.2.1 Constants 6-3
6.2.2 Short Addressing Modes 6-4
6.2.3 Long Addressing Mode 6-5
6.2.4 Indirect Addressing Modes 6-6
6.2.5 Branch Target Addressing Modes 6-7
6.3 CONDITION CODE SPECIFICATION 6-8

GENERAL INDEX

7 INTERRUPT AND TRAP FUNCTION

7.1 INTERRUPT SYSTEM STRUCTURE 7-2

7.2 NORMAL INTERRUPT PROCESSING AND PEC SERVICE 7-4

7.2.1 Interrupt System Register Description 7-5
7.2.1.1 INTERRUPT CONTROL REGISTERS 7-5
7.2.1.2 INTERRUPT CONTROL FUNCTIONS IN THE PSW 7-8

7.2.2 PEC Service Channels Register Description 7-9
7.2.2.1 PEC CHANNEL COUNTER/CONTROL REGISTERS 7-9
7.2.2.2 PEC SOURCE AND DESTINATION POINTERS 7-10

7.2.3 Prioritization of Interrupt and PEC Service Requests 7-12
7.2.3.1 ENABLING AND DISABLING OF INTERRUPT SOURCES 7-12
7.2.3.2 PRIORITY LEVEL STRUCTURE 7-12
7.2.3.3 EXAMPLE FOR THE USE OF THE CPU PRIORITY 7-12

7.2.4 Interrupt Procedure 7-14
7.2.4.1 INTERRUPT PROCEDURE WITH SEGMENTATION DISABLED 7-14
7.2.4.2 INTERRUPT PROCEDURE WITH SEGMENTATION ENABLED 7-14
7.2.4.3 CONTEXT SWITCHING FOR INTERRUPT SERVICE ROUTINES 7-15

7.2.5 Interrupt Processing via the Peripheral Event Controller PEC 7-15

7.2.6 Interrupt and PEC Response Times 7-17

7.2.7 External Interrupts 7-19

7.3 TRAP FUNCTIONS 7-21

7.3.1 Software Traps 7-21

7.3.2 Hardware Traps 7-21
7.3.2.1 EXTERNAL NMI TRAP 7-22
7.3.2.2 STACK OVERFLOW TRAP 7-22
7.3.2.3 STACK UNDERFLOW TRAP 7-23
7.3.2.4 UNDEFINED OPCODE TRAP 7-23
7.3.2.5 PROTECTION FAULT TRAP 7-23
7.3.2.6 ILLEGAL WORD OPERAND ACCESS TRAP 7-23
7.3.2.7 ILLEGAL INSTRUCTION ACCESS TRAP 7-23
7.3.2.8 ILLEGAL EXTERNAL BUS ACCESS TRAP 7-23

8 PERIPHERALS

8.1 CAPTURE/COMPARE (CAPCOM) UNIT 8-2

8.1.1 Timers T0 and T1 8-5
8.1.1.1 TIMER MODE 8-5
8.1.1.2 COUNTER MODE 8-6
8.1.1.3 RELOAD 8-7
8.1.1.4 TIMER T0 AND T1 INTERRUPTS 8-7
8.1.1.5 BLOCK DIAGRAM 8-8

GENERAL INDEX

8.1.2 Capture/Compare Registers 8-9
8.1.2.1 CAPTURE MODE 8-11
8.1.2.2 COMPARE MODES 8-12
8.1.2.3 CAPTURE/COMPARE INTERRUPTS 8-19

8.2 GENERAL PURPOSE TIMERS (GPT) 8-19

8.2.1 GPT1 Block 8-22
8.2.1.1 GPT1 CORE TIMER T3 8-23
8.2.1.2 GPT1 AUXILIARY TIMERS T2 AND T4 8-27

8.2.2 GPT2 Block 8-36
8.2.2.1 GPT2 CORE TIMER T6 8-37
8.2.2.2 GPT2 AUXILIARY TIMER T5 8-38
8.2.2.3 GPT2 CAPTURE/RELOAD REGISTER CAPREL 8-41

8.3 A/D Converter (ADC) 8-45

8.3.1 Conversion Modes and Operation 8-45
8.3.1.1 SINGLE CHANNEL CONVERSION MODE 8-48
8.3.1.2 SINGLE CHANNEL CONTINUOUS CONVERSION 8-48
8.3.1.3 AUTO SCAN CONVERSION MODE 8-49
8.3.1.4 AUTO SCAN CONTINUOUS CONVERSION 8-49

8.3.2 A/D Converter Interupt Control 8-49

8.4 SERIAL CHANNELS 8-49

8.4.1 Modes of Operation 8-51
8.4.1.1 ASYNCHRONOUS OPERATION 8-52
8.4.1.2 SYNCHRONOUS OPERATION 8-56

8.4.2 Baud Rates 8-58
8.4.2.1 ASYNCHRONOUS MODE BAUD RATES 8-58
8.4.2.2 SYNCHRONOUS MODE BAUD RATES 8-59

8.4.3 Serial Channels Interrupt Control 8-60

8.5 WATCHDOG TIMER (WDT) 8-61

9 EXTERNAL BUS INTERFACE

9.1 EXTERNAL BUS CONFIGURATION DURING RESET 9-2

9.2 SINGLE CHIP MODE 9-4

9.3 16/18-BIT ADDRESS, 8-BIT DATA, NON-MULTIPLEXED BUS 9-4

9.4 16/18-BIT ADDRESS, 8-BIT DATA, MULTIPLEXED BUS 9-5

9.5 16/18-BIT ADDRESS, 16-BIT DATA, MULTIPLEXED BUS 9-6

9.6 16/18-BIT ADDRESS, 16-BIT DATA, NON-MULTIPLEXED BUS 9-8

GENERAL INDEX

9.7 EXTERNAL BUS TRANSFER CHARACTERISTICS 9-9

9.7.1 Multiplexed Bus Transfer Characteristics 9-9

9.7.1.1 MULTIPLEXED BUS MEMORY READS 9-10

9.7.1.2 MULTIPLEXED BUS MEMORY WRITES 9-10

9.7.2 Non-Multiplexed Bus Transfer Characteristics 9-10

9.7.2.1 NON-MULTIPLEXED BUS MEMORY READS 9-11

9.7.2.2 NON-MULTIPLEXED BUS MEMORY WRITES 9-11

9.8 USER SELECTABLE BUS CHARACTERISTICS 9-12

9.8.1 Programmable Memory Cycle Time 9-12

9.8.2 Programmable Memory Tri-State Time 9-14

9.8.3 Read/Write Signal Delay 9-16

9.8.4 ALE signal delay 9-17

9.8.5 Switching between the Bus Modes. 9-18

9.9 EXTERNAL MEMORY ACCESS VIA THE DATA READY SIGNAL 9-19

10 PARALLEL PORT

10.1 PORTS 0 THROUGH 4 10-1

10.1.1 Port 0 and Port 1 10-4

10.1.2 Port 2 10-6

10.1.3 Port 3 10-10

10.1.3.1 PORT 3 PINS T0IN, T2IN, T3IN, T4IN, T3EUD, CAPIN, AND READY 10-11

10.1.3.2 PORT 3 PINS T3OUT, T6OUT, TXD0, TXD1, WR, CLKOUT 10-12

10.1.3.3 PORT 3 PIN BHE 10-13

10.1.3.4 PORT 3 PINS RXD0 AND RXD1 10-14

10.1.4 Port 4 10-15

10.2 PORT 5 10-16

11 SYSTEM RESET

11.1 $\overline{\text{RSTIN}}$ and $\overline{\text{RSTOUT}}$ Pins 11-1

11.2 RESET VALUES FOR ST10x166 REGISTERS 11-2

11.3 WATCHDOG TIMER OPERATION AFTER RESET 11-3

11.4 PORTS AND EXTERNAL BUS CONFIGURATION DURING RESET 11-3

11.5 INITIALIZATION SOFTWARE ROUTINE 11-4

11.6 THE BOOT-STRAP MODE 11-4

GENERAL INDEX

12 POWER REDUCTION MODE

12.1 POWER DOWN MODE 12-1

12.2 IDLE MODE 12-1

12.3 STATUS OF OUTPUT PINS DURING IDLE AND POWER DOWN MODE 12-2

13 SYSTEM PROGRAMMING

13.1 INSTRUCTIONS PROVIDED AS SUBSETS OF INSTRUCTIONS 13-1

13.1.1 Directly Substitutable Instructions 13-1

13.1.2 Modification of System Flags 13-1

13.1.3 External Memory Data Access 13-1

13.2 MULTIPLICATION AND DIVISION 13-2

13.3 BCD CALCULATIONS 13-3

13.4 STACK OPERATIONS 13-3

13.4.1 Internal System Stack 13-3

13.4.1.1 USE OF STACK UNDERFLOW/OVERFLOW REGISTERS 13-4

13.4.2 User Stacks 13-5

13.5 REGISTER BANKING 13-5

13.6 PROCEDURE CALL ENTRY AND EXIT 13-5

13.6.1 Passing Parameters on the System Stack 13-5

13.6.2 Cross Segment Subroutine Calls 13-5

13.6.3 Providing Local Registers for Subroutines 13-6

13.7 TABLE SEARCHING 13-7

13.8 PERIPHERAL CONTROL AND INTERFACE 13-7

13.9 FLOATING POINT SUPPORT 13-7

13.10 TRAP/INTERRUPT ENTRY AND EXIT 13-7

GENERAL INDEX

APPENDICES

A INSTRUCTION SET

A.1 **DEFINITIONS** A-1

A.1.2 **Instruction Name** A-1

A.1.3 **Syntax** A-1

A.1.4 **Operation / Description** A-1

A.1.5 **Data Types** A-2

A.1.6 **Condition Flags** A-2

A.1.7 **Addressing Modes** A-3

A.1.8 **Format** A-4

A.1.9 **Number of Bytes** A-4

A.2 **SINGLE INSTRUCTION DESCRIPTION** A-4

B REGISTERS

B.1 **CPU GENERAL PURPOSE REGISTERS (GPRs)** B-2

B.2 **SPECIAL FUNCTION REGISTERS Ordered by Address** B-4

B.3 **SPECIAL FUNCTION REGISTERS ALPHABETICAL ORDER** B-12

C APPLICATION EXAMPLE

EXTERNAL BUS AND MEMORY CONFIGURATIONS C-1

CALCULATION OF THE USER SELECTABLE BUS TIMING PARAMETERS C-6

D APPLICATION NOTE, PROGRAMMING FLASH MEMORY D-1

E EXAMPLE BOOT-STRAP LOADER E-1

F DATASHEETS

ST10F166

ST10166 and ST10R166

INTRODUCTION

The rapidly growing area of embedded control applications represents one of the most time-critical operating environments for today's microcontrollers. Complex control algorithms must be processed based on a large number of digital as well as analog input signals, and the appropriate output signals must be generated within a defined minimum response time. With the increasing complexity of embedded control applications, a significant increase in CPU performance and peripheral functionality over conventional 8-bit controllers is required of microcontrollers.

Driven by the non-volatile FLASH memory technology developed internally by SGS-THOMSON Microelectronics, the new ST10 family of 16-bit CMOS microcontrollers achieves this high performance goal. The ST10 family offers a 16 bit core, FLASH/ROM and RAM capabilities, and advanced peripheral functions.

The real 16-bit core of the ST10 family combines the advantages of both RISC and CISC processors. It consists of a RISC-like architecture with a 16-bit ALU, 4 stages of instruction pipeline and dedicated Special Function Registers (SFRs) and a CISC-like instruction set for the high performance CPU (10 million instructions per second).

Intelligent peripherals have been integrated to reduce the need for CPU intervention to a minimum extent. The ST10 family includes a 10 channel Analog to Digital Converter with 10 bits of resolution and 9.75µs of conversion time, Multifunction Timers, a Capture/Compare unit, 2 serial channels (USARTs) offering 625Kbaud in full duplex asynchronous communication and 2.5Mbaud in half duplex synchronous communication, an 8 channel Peripheral Event Controller allowing data transfer in only 1 instruction cycle time and 76 I/O lines with individual bit addressability.

Based on a von Neumann architecture, up to 256Kbytes of linear address space for code and data can be accessed with the External Bus Controller interface.

This high performance 16 bit microcontroller family with its different sets of on-chip peripherals and the FLASH memory technology meet the requirements of real-time control applications such as automotive engine control, industrial control and data communication.

In addition, many applications require program or data updating during the product life. In the same way it can be very helpful to modify the program during the development or production phase in many control applications. With the on-chip Flash memory of the ST10F166, flexibility and security are brought to these applications.

The ST10x166 family currently includes:

ST10R166 : ROMless Version

ST10166 : mask-programmable ROM-Version for volume production.

ST10F166 : reprogrammable FLASH-Version for prototyping, preproduction, small volume and reprogrammable applications.

Note: In this document, any reference to the ST10x166 can be applied to the different members of the family unless otherwise noted. The ST10R166 is ROMless, and the ST10166 and ST10F166 are fully compatible except for the program mode of the FLASH memory of the ST10F166. All time specifications

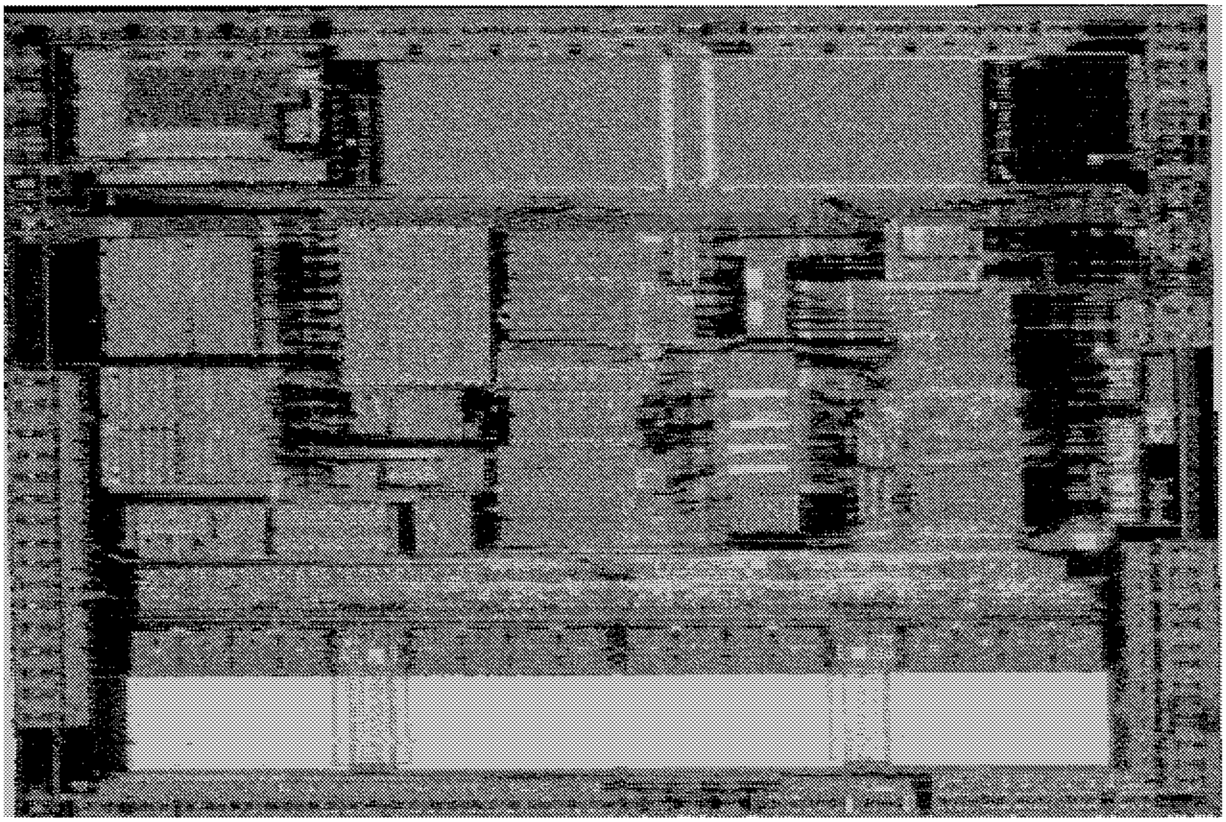

Die photo of ST10F166 with 32K on-chip FLASH Memory

FEATURES

High Performance 16-Bit CPU With Four Stage Pipeline

- 100ns minimum instruction cycle time, with most instructions executed in 1 cycle
- 500ns multiplication (16-bit x 16bit), 1µs division (32-bit/16bit)
- High bandwidth internal data buses
- Register based design with multiple variable register banks
- Single cycle context switching support
- 256Kbytes linear address space for code and data (von Neumann architecture)
- System stack cache support with automatic stack overflow/underflow detection

Control Oriented Instruction Set with High Efficiency

- Bit, byte, and word data types
- Flexible and efficient addressing modes for high code density
- Enhanced boolean bit manipulation with direct addressability of 4Kbits for peripheral control and user defined flags
- Hardware traps to identify exception conditions during runtime

Integrated On-chip Memory

- 1Kbyte internal RAM,
- 32Kbytes internal ROM (ST10166)
- 32Kbytes internal FLASH memory (ST10F166)

External Memory Expansion Interface

- Supports 3 different bus configurations plus segmentation capability

16 Priority Level Interrupt System

- 32 interrupt sources with separate interrupt vectors
- 300/500ns typical/maximum interrupt latency in case of internal program execution

8 Channel Peripheral Event Controller (PEC)

- Interrupt driven single cycle data transfer
- Transfer count option (CPU interrupt generation after a programmable number of PEC transfers)
- Eliminates overhead of saving and restoring system state for interrupt requests

Intelligent Peripheral Subsystems

- 10-Channel 10-bit A/D Converter, 9.75µs conversion time, auto scan modes
- 16-Channel Capture/Compare Unit with 2 independent time basesvery flexible PWM unit/event recording unit with 5 different operating modes, includestwo 16-bit timers/counters with 400ns maximum resolution
- 2 Multifunctional General Purpose Timer Units
  GPT1: three 16-bit timers/ counters, 400ns maximum resolution
  GPT2: two 16-bit timers/counters, 200ns maximum resolution
- 2 Serial Channels (USART) with independent baud rate generators provide parity, framing, and overrun error detection
- Watchdog Timer with programmable time intervals

76 I/O Lines With Individual Bit Addressability

- Tri-stated in input mode, Schmitt-Trigger characteristics

Different Temperature Ranges

-0 to 70°C, -40 to 85°C, -40 to 105°C

Micron Multifunctional Cmos Process

- Low Power CMOS Technology, including power saving Idle and Power Down modes

100-Pin Metric Plastic Quad Flat Pack (PQFP) Package

- JEDEC standard, 0.65mm lead spacing, surface mount technology

Complete Development Support

- ‘C’ Compiler
- Macro Assembler, Linker, Locater, Library Manager, Object-to-Hex-Converter
- Simulator for the complete simulation of the CPU and the on-chip peripherals
- Real-Time In-Circuit Emulator
- Flash programming board for ST10F166
- Evaluation Board with monitor program

NOTES:

CHAPTER 1

ARCHITECTURAL OVERVIEW

1. ARCHITECTURAL OVERVIEW

This chapter contains an overview of the ST10x166's architecture with combines advantages of both RISC and CISC processors in a very well-balanced way. It introduces the features which do in sum result in a high performance microcontroller which is the right choice not only for today's applications, but also for future engineering challenges.

1.1 BASIC CPU CONCEPTS AND OPTIMIZATIONS

To meet the demand for greater performance and flexibility, a number of areas has been optimized in the processor core. These are summarized below, and described in detail in the following sections:

- **High Instruction Bandwidth/Fast Execution**
- **High Function 8-bit and 16-bit Arithmetic and Logic Unit**
- **Extended Bit Processing and Peripheral Control**
- **High Performance Branch-, Call-, and Loop Processing**
- **Consistent and Optimized Instruction Formats**
- **Programmable Multiple Priority Interrupt Structure**

1.1.1 High Instruction Bandwidth/Fast Execution

To achieve the desired performance, a goal of approximately one instruction executed during each machine cycle was set for the core CPU. Primarily, this goal has been reached except for branch-, multiply- or divide instructions. These instructions, however, have also been optimized. For example, branch instructions only require an additional machine cycle when a branch is taken, and most branches taken in loops require no additional machine cycles.

The instruction cycle time has been dramatically reduced through the use of instruction pipelining. This technique allows the core CPU to process portions of multiple sequential instruction stages in parallel. The following four stage pipeline provides the optimum balancing for the ST10x166 family's CPU core:

FETCH:	**In this stage, an instruction is fetched from the internal ROM or RAM, or from the external memory based on the current IP value.**
DECODE:	**In this stage, the previously fetched instruction is decoded and the required operands are fetched.**

EXECUTE: In this stage, the specified operation is performed on the previously fetched operands

WRITE BACK: In this stage, the result is written to the specified location.

If this technique were not used, each instruction would require four machine cycles. This increased performance allows a greater number of tasks and interrupts to be processed.

1.1.2 High Function 8-bit and 16-bit Arithmetic and Logic Unit

Most internal execution blocks have been optimized to perform operations on either 8-bit or 16-bit quantities. Once the pipeline has been filled, one instruction is completed per machine cycle except for multiply and divide. An advanced Booth algorithm has been incorporated to allow four bits to be multiplied and two bits to be divided per machine cycle. Thus, these operations require four and nine machine cycles, respectively, to perform a 16-bit by 16-bit (or 32-bit by 16-bit) calculation plus one machine cycle to setup and adjust the operands and the result. Even these longer multiply and divide instructions can be interrupted during their execution to allow for very fast interrupt response. Instructions have also been provided to allow byte packing in memory while providing sign extension of bytes for word wide arithmetic operations. The internal bus structure also allows transfers of bytes or words to or from peripherals based on the peripheral requirements.

A set of consistent flags is automatically updated in the PSW after each arithmetic, logical, shift, or movement operation. These flags allow branching on specific conditions. Support for both signed and unsigned arithmetic is provided through user-specifiable branch tests. These flags are also preserved automatically by the CPU upon entry to an interrupt or trap routine.

1.1.3 Extended Bit Processing and Peripheral Control

A large number of instructions has been dedicated to bit processing. These instructions provide efficient control and testing of peripherals while enhancing data manipulation. Unlike many current microcontrollers, these instructions provide direct access to two operands in the bit-addressable space without requiring movement into temporary flags.

The same logical instructions available for words and bytes are also supported for bits. This allows the user to compare and modify a control bit for a peripheral in one instruction. Multiple bit shift instructions have been included to avoid long instruction streams of single bit shift operations. These are also performed in a single machine cycle.

In addition, bit field instructions have been provided which allow the modification of multiple bits from one operand in a single instruction.

1.1.4 High Performance Branch-, Call-, and Loop Processing

Due to the high percentage of branching in controller applications, branch instructions have been optimized to require one extra machine cycle only when a branch is taken. This is implemented by precalculating the target address while decoding the instruction. To decrease loop execution overhead, three enhancements have been provided. The first solution provides single cycle branch execution after the first iteration of a loop.

Thus, only one machine cycle is lost during the execution of the entire loop. In loops which fall through upon completion, no machine cycles are lost when exiting the loop. No special instructions are required to perform loops, and loops are automatically detected during execution of branch instructions.

The second loop enhancement allows the detection of the ends of tables and avoids the use of two compare instructions embedded in loops. One simply places the lowest negative number at the end of the specific table, and specifies branching if neither this value nor the compared value have been found. Otherwise the loop is terminated if either condition has been met. One can then test which condition has occurred. This method is described in detail in section 13.7.

The third loop enhancement provides a more flexible solution than the Decrement and Skip on Zero instruction which is found in many other microcontrollers. Through the use of Compare and Increment or Decrement instructions, the user can make comparisons to any value. This allows loop counters to cover any range. This is particularly advantageous in table searching.

Saving of system state is automatically performed on the internal system stack avoiding the use of instructions to preserve state upon entry and exit of interrupt or trap routines. Call instructions push the value of the IP on the system stack, and require the same execution time as branch instructions.

Instructions have also been provided to support indirect branch and call instructions. This supports implementation of multiple CASE statement branching in assembler macros and high level languages.

1.1.5 Consistent and Optimized Instruction Formats

To obtain optimum performance in a pipelined design, an instruction set has been designed which incorporates concepts from Reduced Instruction Set Computers (RISC). These concepts primarily allow fast decoding of the instructions and operands while reducing pipeline holds. These concepts, however, do not preclude the use of complex instructions which are required by microcontroller users. The following goals were used to design the instruction set:

1) Provide powerful instructions to perform operations which currently require sequences of instructions and are frequently used. Avoid transfer into and out of temporary registers such as accumulators and carry bits. Perform tasks in parallel such as saving state upon entry to interrupt routines or subroutines

2) Avoid complex encoding schemes by placing operands in consistent fields for each instruction. Also avoid complex addressing modes which are not frequently used. This decreases the instruction decode time while also simplifying the development of compilers and assemblers.

3) Provide most frequently used instructions with one-word instruction formats. All other instructions are placed into two-word formats. This allows all instructions to be placed on word boundaries, which alleviates the need for complex alignment hardware. It also has the benefit of increasing the range for relative branching instructions.

1.1.6 Programmable Multiple Priority Interrupt Structure

A number of enhancements have been included to allow processing of a large number of interrupt sources. These are presented below:

1) Peripheral Event Controller (PEC): This processor is used to off-load many interrupt requests from the CPU. It avoids the overhead of entering and exiting interrupt or trap routines by performing single-cycle interrupt-driven byte or word data transfers.

2) Multiple Priority Interrupt Controller: This controller allows all interrupts to be placed at any specified priority. Interrupts may also be grouped, which provides the user with the ability to prevent similar priority tasks from interrupting each other.

3) Multiple Register Banks: This feature allows the user to specify up to sixteen general purpose registers located anywhere in the internal RAM. A single one machine cycle instruction is used to switch register banks from one task to another.

4) Interruptable Multiple Cycle Instructions: Reduced interrupt latency is provided by allowing multiple cycle instructions (multiply, divide) to be interruptable.

1.2 FUNCTIONAL BLOCKS

The ST10x166 family clearly separates peripherals from the core.

This structure permits the maximum number of operations to be performed in parallel and allows peripherals to be added or deleted from family members without modifications to the core. Each functional block processes data independently and communicates information over common buses. Functional blocks in the CPU core are controlled by signals from the instruction decode logic. Peripherals are controlled by data written to the Special Function Registers (SFRs).

The following sections describe the functional blocks of the ST10x166 and interactions between these blocks.

1.2.1 16-Bit CPU

1.2.1.1 INSTRUCTION DECODING

Instruction decoding is primarily generated from PLA outputs based on the selected opcode. No microcode is used and each pipeline stage receives control signals staged in control registers from the decode stage PLAs. Pipeline holds are primarily caused by wait states for external memory accesses and cause the holding of signals in the control registers. Multiple-cycle instructions are performed through instruction injection and simple internal state machines which modify required control signals.

1.2.1.2 ARITHMETIC AND LOGIC UNIT

All standard arithmetic and logical operations are performed in a 16-bit ALU. In addition, for byte operations, signals are provided from bits six and seven of the ALU result to correctly set the condition flags. Multiple precision arithmetic is provided through a 'CARRY-IN' signal to the ALU from previously calculated portions of the desired operation. Booth multiplication and division are supported by an extended ALU and a bit shifter placed on two coupled 16-bit registers, MDL and MDH. All targets for branch calculations are also computed in the central ALU.

1.2.1.3 BARREL SHIFTER

A 16-bit barrel shifter provides multiple bit shifts in a single cycle. Rotates and arithmetic shifts are also supported.

1.2.2 Peripheral Event Controller (PEC) and Interrupt Control

Each interrupt source is prioritized every machine cycle in the interrupt control block. If PEC service is selected, a PEC transfer is started. If CPU interrupt service is requested, the current CPU priority level stored in the PSW register is tested to determine whether a higher priority interrupt is currently being serviced. When an interrupt is acknowledged, the current state of the machine is saved on the internal system stack and the CPU branches to the system specific vector for the peripheral.

The PEC contains a set of SFRs which store the count value and control bits for eight data transfer channels. In addition, the PEC uses a dedicated area of RAM which contains the source and destination addresses. The PEC is controlled similar to any other peripheral through SFRs containing the desired configuration of each channel.

1.2.3 Internal RAM

A dual port 512 by 16-bit internal RAM provides fast access to General Purpose Registers (GPRs), user data, and system stack. A unique decoding scheme provides flexible user register banks in the internal memory while optimizing the remaining RAM for user data.

Hardware detection of the selected memory space is placed at the internal memory decoders and allows the user to specify any address directly or indirectly and obtain the desired data without using temporary registers or special instructions.

1.2.4 Internal Program Memory

For both code and data storage, the ST10166 provides an internal ROM of 32 Kbytes and the ST10F166 provides an internal FLASH memory of 32Kbytes. For both, this memory area is connected to the CPU via a 32-bit bus. Thus, an entire double word instruction can be fetched in one machine cycle. Program execution from the on-chip ROM or FLASH memory is the fastest of all possible alternatives.

Figure 1-1. Functional Block Diagram

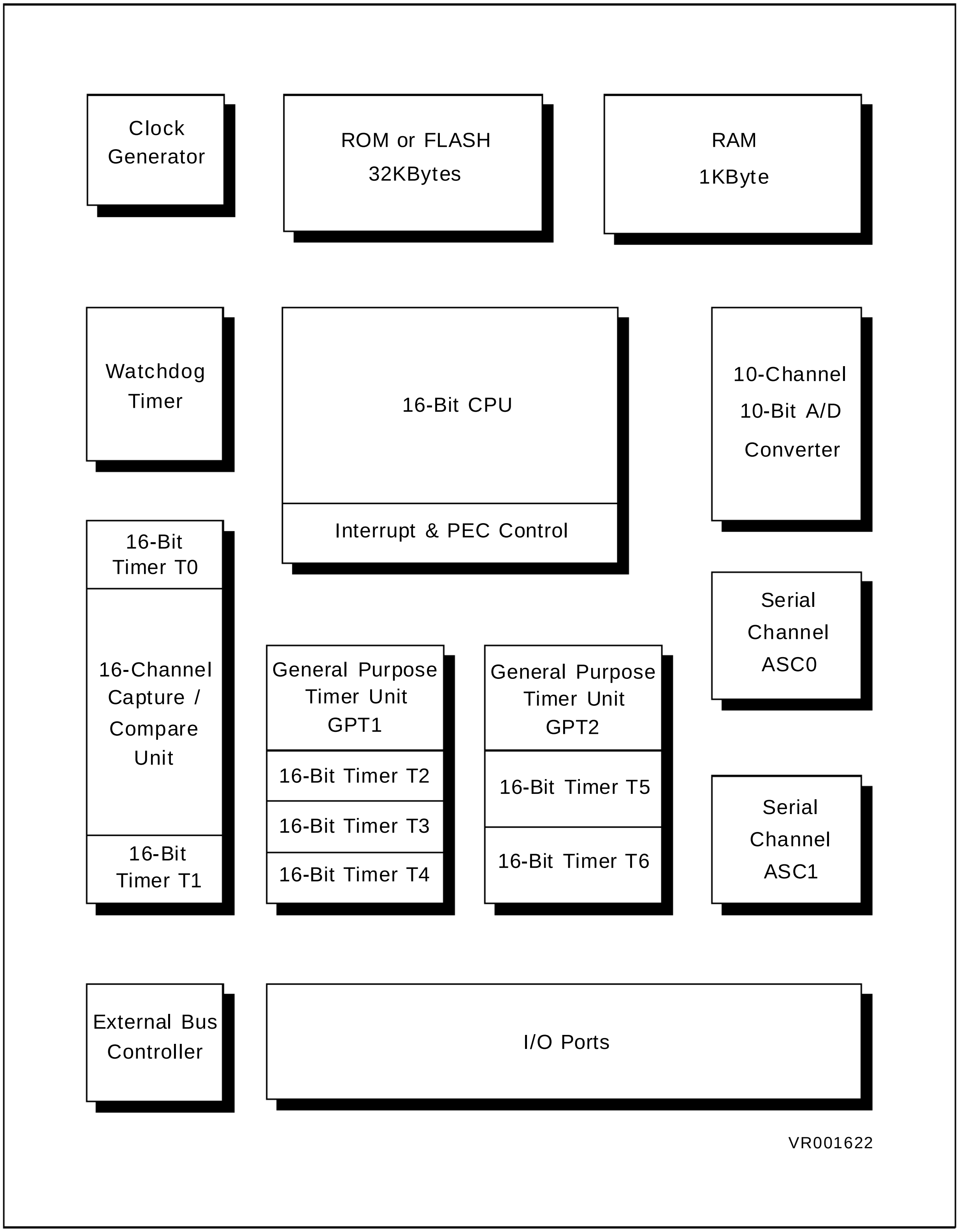
Clock Generator
ROM or FLASH 32KBytes
RAM 1KByte
Watchdog Timer
16-Bit CPU
Interrupt & PEC Control
10-Channel 10-Bit A/D Converter
16-Bit Timer T0
16-Channel Capture / Compare Unit
16-Bit Timer T1
General Purpose Timer Unit GPT1
16-Bit Timer T2
16-Bit Timer T3
16-Bit Timer T4
General Purpose Timer Unit GPT2
16-Bit Timer T5
16-Bit Timer T6
Serial Channel ASC0
Serial Channel ASC1
External Bus Controller
I/O Ports
VR001622

1.2.5 Clock Generator

The on-chip clock generator contains a prescaler which divides the external clock frequency by 2. Thus, the internal clock frequency is half the external clock frequency (i.e. f_{OSC} = 40MHz at internal clock frequency = 20MHz). Two separated clocks are generated for the CPU and the peripheral part of the chip. While the CPU clock is stopped during wait states or during the idle mode, the peripheral clock keeps running. Both clocks are switched off when the power down mode is entered.

1.2.6 Peripherals and Ports

The ST10x166 also contains:

- **two blocks of general purpose timers**
- **a capture/compare unit**
- **two serial interface channels**
- **an A/D converter**
- **a watchdog timer**
- **six I/O ports with a total of 76 I/O lines**

Each peripheral also contains a set of SFRs which control the functionality of the peripheral and temporarily store intermediate data results. Each peripheral has an associated set of status flags. Individually selected clock signals are generated for each peripheral from binary multiples of the system clock.

CHAPTER 2

SYSTEM DESCRIPTION

2. SYSTEM DESCRIPTION

In this chapter, a summary of the ST10x166 is presented. The following block diagram gives an overview of the different on-chip components and of the advanced, high bandwidth internal bus structure of the ST10F166.

Figure 2-1. Block Diagram

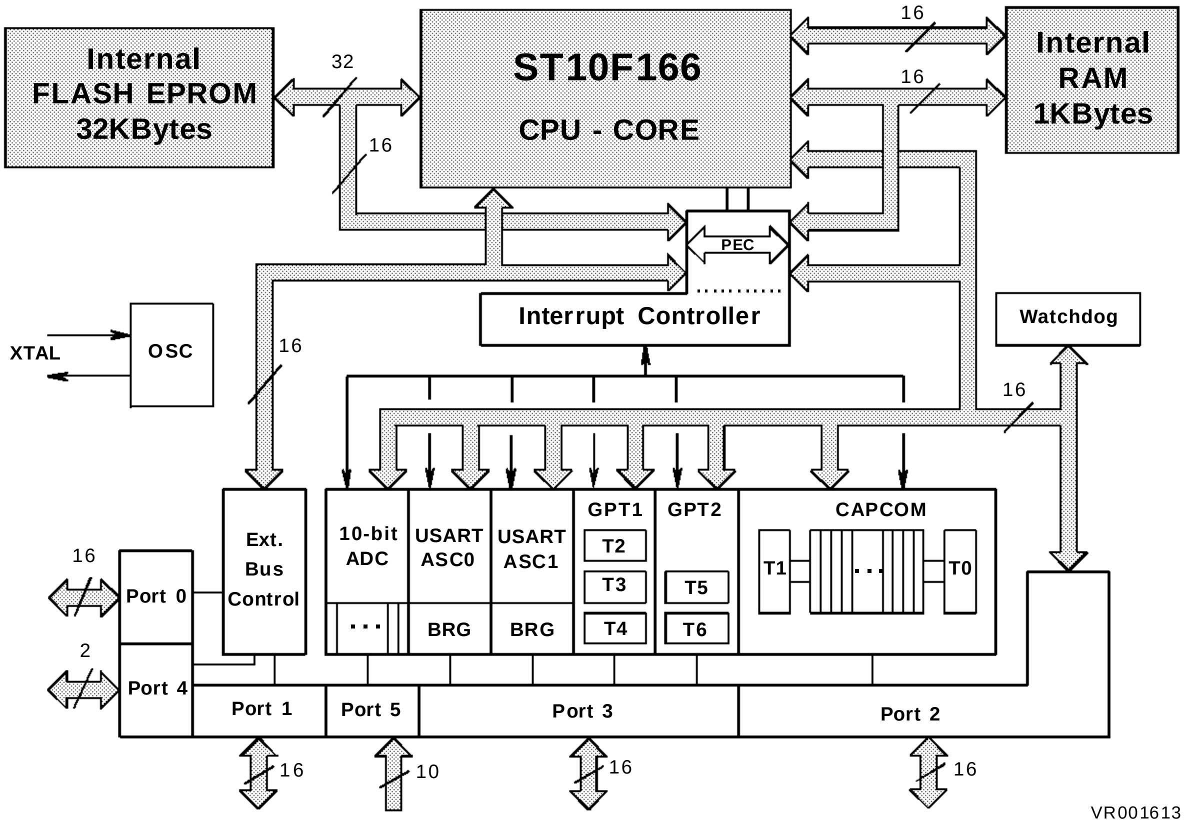
Internal
FLASH EPROM
32KBytes
32
16
ST10F166
CPU - CORE
16
16
Internal
RAM
1KBytes
PEC
Interrupt Controller
Watchdog
XTAL
OSC
16
16
16
Port 0
2
Port 4
Ext.
Bus
Control
10-bit
ADC
USART
ASC0
BRG
USART
ASC1
BRG
GPT1
T2
T3
T4
GPT2
T5
T6
CAPCOM
T1
T0
Port 1
Port 5
Port 3
Port 2
16
10
16
16
VR001613

2.1 MEMORY ORGANIZATION

The memory space of the ST10x166 is configured in a Von Neumann architecture which means that code memory, data memory, registers and I/O ports are organized within the same linear address space which currently includes 256Kbytes. Address space expansion to 16 Mbytes is provided for future versions. The entire memory space can be accessed by byte or by word. Particular portions of the on-chip memory have additionally been made directly bit addressable.

The ST10166 contains 32Kbytes of mask-programmable on-chip ROM for code or constant data.

The ST10F166 contains 32Kbytes of reprogrammable on-chip FLASH memory for code or constant data.

A large dual port RAM of 1Kbyte is contained on all members of the ST10x166 family. This internal RAM is provided as a storage for user defined variables, for the system stack, general purpose register banks and even for code. A register bank can consist of up to 16 wordwide (R0 to R15) and/or bytewide (RL0, RH0, ..., RL7, RH7) called General Purpose Registers (GPRs).

512 bytes of the address space are reserved for the Special Function Register (SFR) area. SFRs are wordwide registers which are used for controlling and monitoring functions of the different on-chip units. 118 SFRs are currently implemented. Unused SFR addresses are reserved for future members of the ST10x166 family.

In order to meet the needs of designs where more memory is required than is provided on chip, up to 256Kbytes of external RAM and/or ROM can be connected to the microcontroller.

2.2 EXTERNAL BUS CONTROLLER

All of the external memory accesses are performed by a particular on-chip External Bus Controller (EBC). It can be programmed to either the Single Chip Mode when no external memory is required, or to one of four different external memory access modes, which are as follows:

- 16-bit/18-bit Addresses, 16-bit Data, Non-Multiplexed
- 16-bit/18-bit Addresses, 16-bit Data, Multiplexed
- 16-bit/18-bit Addresses, 8-bit Data, Multiplexed
- 16-bit/18-bit Addresses, 8-bit data, Non-Multiplexed

In the non-multiplexed bus mode, Port 1 is used as an output for addresses and Port 0 is used as an input/output for data; the upper half of Port 0 can not be used for general purpose I/O in the 8-bit data bus mode. In the multiplexed bus modes, one 16-bit port, Port 0, is used as an input/output for both addresses and data.

Important timing characteristics of the external bus interface (Memory Cycle Time, Memory Tri-State Time and Read/Write Delay) have been made programmable to allow the user the adaption of a wide range of different types of memories. Access to very slow memories is supported via a particular 'Ready' function.

For applications which require less than 64Kbytes of memory space, a non-segmented memory model can be selected. In this case, all memory locations can be addressed by 16 bits, and thus Port 4 is not needed as an output for the two most significant address bits (A17 and A16), as is the case when using the segmented memory model.

2.3 CENTRAL PROCESSING UNIT (CPU)

The main core of the CPU consists of a 4-stage instruction pipeline, a 16-bit arithmetic and logic unit (ALU) and dedicated SFRs. Additional hardware has been spent for a separate multiply and divide unit, a bit-mask generator and a barrel shifter.

Based on these hardware provisions, most of the ST10x166's instructions can be executed in just one machine cycle which requires 100ns at 20MHz CPU clock. For example, shift and rotate instructions are always processed during one machine cycle independent of the number of bits to be shifted. All multiple-cycle instructions have been optimized so that they can be executed very fast as well: A 32-bit/16-bit division in 1µs, a 16-bit x 16-bit multiplication in 0.5µs, and branches in 200ns. Another pipeline optimization, the 'Jump Cache', allows reducing the execution time of repeatedly performed jumps in a loop from 200ns to 100ns.

The CPU disposes of an actual register context consisting of up to 16 wordwide GPRs which are physically allocated within the on-chip RAM area. A Context Pointer (CP) register determines the base address of the active register bank to be accessed by the CPU at the time. The number of register banks is only restricted by the available internal RAM space. For easy parameter passing, register banks can also be organized to overlap.

Figure 2-2. CPU Block Diagram

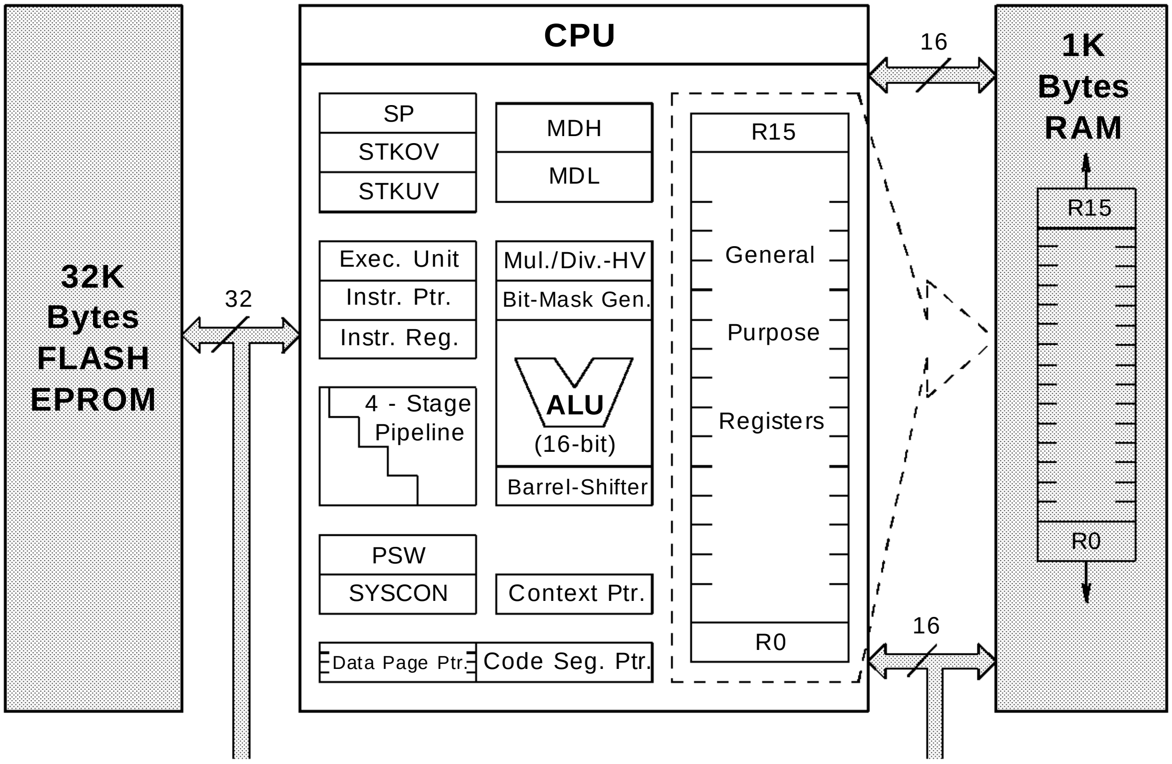
32K Bytes FLASH EPROM
32
CPU
SP
STKOV
STKUV
MDH
MDL
Exec. Unit
Instr. Ptr.
Instr. Reg.
Mul./Div.-HV
Bit-Mask Gen.
4 - Stage Pipeline
ALU
(16-bit)
Barrel-Shifter
PSW
SYSCON
Context Ptr.
Data Page Ptr.
Code Seg. Ptr.
R15
General Purpose Registers
R0
16
16
1K Bytes RAM
R15
R0

VR001614

A system stack of up to 512 bytes is provided as a storage for temporary data. The system stack is allocated in the on-chip RAM area, and it is accessed by the CPU via the stack pointer (SP) register. Two separate SFRs, STKOV and STKUN, are implicitly compared against the stack pointer value upon each stack access for the detection of a stack overflow or underflow.

The high performance offered by the hardware implementation of the CPU can efficiently be utilized by a programmer via the highly functional ST10x166 instruction set which includes the following instruction classes:

- Arithmetic Instructions
- Logical Instructions
- Boolean Bit Manipulation Instructions
- Compare and Loop Control Instructions
- Shift and Rotate Instructions
- Prioritize Instruction
- Data Movement Instructions
- System Stack Instructions
- Jump and Call Instructions
- Return Instructions
- System Control Instructions
- Miscellaneous Instructions

The basic instruction length is either 2 or 4 bytes. Possible operand types are bits, bytes and words. A variety of direct, indirect or immediate addressing modes are provided to specify the required operands.

2.4 INTERRUPT SYSTEM

With an interrupt response time within a range from just 250ns to 500ns (in case of internal program execution), the ST10x166 is capable of reacting very quickly to the occurrence of non-deterministic events.

The architecture of the ST10x166 supports several mechanisms for fast and flexible response to service requests which can be generated from various sources internal or external to the microcontroller. Any of these interrupt requests can be programmed to be serviced by the Interrupt Controller or by the Peripheral Event Controller (PEC).

In contrast to a standard interrupt service where the current program execution is suspended and a branch to the interrupt vector table is performed, just one cycle is 'stolen' from the current CPU activity to perform a PEC service. A PEC service implies a single byte or word data transfer between any two memory locations with an additional increment of either the PEC source or the destination pointer. An individual PEC transfer counter is implicitly decremented for each PEC service except when performing in the continuous transfer mode. When this counter reaches zero, a standard interrupt is performed to the corresponding source related vector location. PEC services are very well suited, for example, for supporting the transmission or reception of blocks of data, or for transferring A/D converted results to a memory table. The ST10x166 has 8 PEC channels each of which offers such fast interrupt-driven data transfer capabilities.

A separate control register which contains an interrupt request flag, an interrupt enable flag and an interrupt priority bitfield, exists for each of the possible interrupt sources. Via its related register, each source can be programmed to one of sixteen interrupt priority levels. Once having been accepted by the CPU, an interrupt service can only be interrupted by a higher prioritized service request. For the standard interrupt processing, each of the possible interrupt sources has a dedicated vector location.

Software interrupts are supported by means of the 'TRAP' instruction in combination with an individual trap (interrupt) number.

The ST10x166 also provides an excellent mechanism to identify and to process exceptions or error conditions that arise during run-time, called 'Hardware Traps'. Hardware traps cause immediate non-maskable system reaction which is similiar to a standard interrupt service (branching to a dedicated vector table location). The occurrence of a hardware trap is additionally signified by a individual bit in the trap flag register (TFR). Except another higher prioritized trap service being in progress, a hardware trap will interrupt any actual program execution. In turn, hardware trap services can normally not be interrupted by standard or PEC interrupts.

2.5 CAPTURE/COMPARE (CAPCOM) UNIT

The CAPCOM unit supports generation and control of timing sequences on up to 16 channels with a maximum resolution of 400ns. The CAPCOM unit is typically used to handle high speed I/O tasks such as pulse and waveform generation, pulse width modulation (PWM), Digital to Analog (D/A) conversion, software timing, or time recording relative to external events.

Two 16-bit timers (T0/T1) with reload registers provide two independent time bases for the capture/compare register array.

The input clock for the timers is programmable to several prescaled values of the internal system clock, or may be derived from an overflow/underflow of timer T6 in module GPT2.

This provides a wide range of variation for the timer period and resolution and allows precise adjustment to the application specific requirements. In addition, an external count input for CAPCOM timer T0 allows event scheduling for the capture/compare registers relative to external events.

The capture/compare register array contains 16 dual purpose capture/compare registers, each of which may be individually allocated to either CAPCOM timer T0 or T1, and programmed for capture or compare function. Each register has one port pin associated with it which serves as an input pin for triggering the capture function, or as an output pin to indicate the occurrence of a compare event.

When a capture/compare register has been selected for capture mode, the current contents of the allocated timer will be latched ('captured') into the capture/compare register in response to an external event at the port pin which is associated with this register. In addition, a specific interrupt request for this capture/compare register is generated. Either a positive, a negative, or both a positive and a negative external signal transition at the pin can be selected as the triggering event. The contents of all registers which have been selected for one of the five compare modes are continuously compared with the contents of the allocated timers. When a match occurs between the timer value and the value in a capture/compare register, specific actions will be taken based on the selected compare mode.

2.6 GENERAL PURPOSE TIMER (GPT) UNIT

The GPT unit represents a very flexible multifunctional timer/counter structure which may be used for many different time related tasks such as event timing and counting, pulse width and duty cycle measurement, pulse generation, or pulse multiplication.

The GPT unit incorporates five 16-bit timers which are organized in two separate modules, GPT1 and GPT2. Each timer in each module may operate independently in a number of different modes, or may be concatenated with another timer of the same module.

Each of the three timers T2, T3, T4 of the GPT1 module can be configured individually for one of three basic modes of operation, which are Timer, Gated Timer, and Counter Mode. In Timer Mode, the input clock for a timer is derived from the internal system clock, divided by a programmable prescaler, while Counter Mode allows a timer to be clocked in reference to external events.

Pulse width or duty cycle measurement is supported in Gated Timer Mode, where the operation of a timer is controlled by the 'gate' level on an external input pin. For these purposes, each timer has one associated port pin which serves as gate or clock input. The maximum resolution of the timers in the GPT1 module is 400ns (@f_{OSC}=40MHz).

The count direction (up/down) for each timer is programmable by software. For timer T3, the count direction may additionally be altered dynamically by an external signal on a port pin to facilitate e.g. position tracking.

Timer T3 has an output toggle latch which changes its state on each timer overflow/underflow. The state of this latch may be output on a port pin e.g for time out monitoring of external hardware components, or may be used internally to clock timers T2 and T4 for measuring long time periods with high resolution.

In addition to their basic operating modes, timers T2 and T4 may be configured as reload or capture registers for timer T3. When used as capture or reload registers, timers T2 and T4 are stopped. The contents of timer T3 are captured into T2 or T4 in response to a signal at their associated input pins. Timer T3 is reloaded with the contents of T2 or T4 either by an external signal or by a selectable state transition of its toggle latch. When both T2 and T4 are configured to alternately reload T3 with the low and high times of a PWM signal, this signal can be constantly generated without software intervention.

With its maximum resolution of 200ns (@f_{OSC}=40MHz), the GPT2 module provides precise event control and time measurement. It includes two timers (T5, T6) and a capture/reload register (CAPREL). Both timers can independently count up or down, clocked with an input clock which is derived from a programmable prescaler. Concatenation of the timers is supported via the output toggle latch of timer T6, which changes its state on each timer overflow/underflow.

The state of this latch may be used to clock timer T5, or it may be output on a port pin. Overflows/underflows of timer T6 can additionally be used to clock the CAPCOM timers T0 or T1, and to cause a reload from the CAPREL register. The CAPREL register may capture the contents of timer T5 based on an external signal transition on the corresponding port pin, and timer T5 will be cleared by this external transition if the clear function is enabled. This allows absolute time differences to be measured or pulse multiplication to be performed without software overhead.

2.7 A/D CONVERTER

For analog signal measurement, a 10-bit A/D converter with 10 multiplexed input channels and a sample and hold circuit has been integrated on-chip. It uses the method of successive approximation which returns the conversion result for an analog channel within 9.75µs @ f_{OSC}=40MHz.

Overrun error detection capability is provided for the conversion result register: an interrupt request will be generated when the result of a previous conversion has not been read from the result register at the time the next conversion is complete.

For applications which require less than 10 analog input channels, the remaining channels can be used as digital input port pins.

The A/D converter of the ST10x166 supports four different conversion modes. In the standard Single Channel conversion mode, the analog level on a specified channel is once sampled and converted into a digital result. In the Single Channel Continous mode, the analog level is repeatedly sampled and converted without software intervention.

In the Auto Scan mode, the analog levels on a prespecified number of channels are sequentially sampled and converted. In the Auto Scan Continuous mode, the number of prespecified channels is repeatedly sampled and converted.

The Peripheral Event Controller (PEC) may be used to automatically store the conversion results into a table in memory for later evaluation, without requiring the overhead of entering and exiting interrupt routines for each data transfer.

2.8 SERIAL CHANNELS

Serial communication with other microcontrollers, processors, terminals, or external peripheral components is provided by two serial interfaces with identical functionality, Serial Channel 0 (ASC0) and Serial Channel 1 (ASC1).

Both channels support full-duplex asynchronous communication up to 625Kbaud and half-duplex synchronous communication up to 2.5 Mbaud.

Two dedicated baud rate generators allow to set up all standard baud rates without oscillator tuning. For transmission, reception, and erroneous reception 3 separate interrupt vectors are provided for each serial channel.

In the synchronous mode, one data byte is transmitted or received synchronously to a shift clock which is generated by the ST10x166. In the asynchronous mode, an 8- or 9bit data frame is transmitted or received, preceded by a start bit and terminated by one or two stop bits. For multiprocessor communication, a mechanism to distinguish address from data bytes has been included (8-bit data+wake up bit mode), and a loop back option is available for testing purposes.

A number of optional hardware error detection capabilities has been included to increase the reliability of data transfers. A parity bit can automatically be generated on transmission or be checked on reception. Framing error detection allows the recognition of data frames with missing stop bits. An overrun error will be generated if the last character received has not been read out of the receive buffer register at the time reception of a new character is complete.

2.9 WATCHDOG TIMER

The Watchdog Timer of the ST10x166 represents one of the fail-safe mechanisms which have been implemented to prevent the controller from malfunctioning for longer periods of time.

The Watchdog Timer of the ST10x166 is always enabled after a reset of the chip, and can only be disabled in the time interval until the EINIT (end of initialization) instruction has been executed. Thus, the chip's start-up procedure is always monitored. When the software has been designed to service the Watchdog Timer before it overflows, the Watchdog Timer times out if the program does not progress properly due to hardware or software related failures. When the Watchdog Timer overflows, it generates an internal hardware reset and pulls the $\overline{\text{RSTOUT}}$ pin low in order to allow external hardware components to reset.

The Watchdog Timer of the ST10x166 is a 16-bit timer which can either be clocked with f_{OSC}/4 or f_{OSC}/256. The high byte of the Watchdog Timer register can be set to a prespecified reload value in order to allow further variation of the monitored time interval. Each time it is serviced by the application software, the high byte of the Watchdog Timer is reloaded. Thus, time intervals between 25µs and 420ms can be monitored (@f_{OSC}=40MHz). The default Watchdog Timer interval after reset is 6.55ms.

2.10 PARALLEL PORTS

The ST10x166 provides 76 I/O lines which are organized into four 16-bit I/O ports (Port0 through 3), one 2-bit I/O port (Port 4), and one 10-bit input port (Port 5). All port lines are bit addressable, and all lines of Port 0 through 4 are individually bit-wise programmable as inputs or outputs via direction registers. The I/O ports are true bidirectional ports which are switched to the high impedance state when configured as inputs. During the internal reset, all port pins are configured as inputs.

Each port line has one programmable alternate input or output function associated with it. Ports 0 and 1 may be used as address and data lines when accessing external memory, while Port 4 outputs the additional segment address bits A16 and A17 in systems where segmentation is enabled to access more than 64Kbytes of memory. Port 2 is associated with the capture inputs/compare outputs of the CAPCOM unit, and Port 3 includes alternate functions of timers, serial interfaces, optional bus control signals ($\overline{\text{WR}}$, $\overline{\text{BHE}}$, $\overline{\text{READY}}$), and the system clock output (CLKOUT). Port 5 is used for the analog input channels to the A/D converter. When anyone of these alternate functions is not used, the respective port line may be used as general purpose I/O line.

CHAPTER 3

MEMORY ORGANIZATION

3. MEMORY ORGANIZATION

The ST10x166 family's memory space is configured in a von Neumann architecture. This means that code and data are accessed within the same linear address space. All of the physically separated memory areas, including the internal ROM (for the ST10166, internal FLASH memory for the ST10F166), internal RAM, internal Special Function Registers (SFRs), and external memory are mapped into a common address space.

The ST10x166 provides a total addressable memory space of 256Kbytes.

This address space is arranged in four segments of 64Kbytes each, and each segment is again subdivided in four pages of 16Kbytes each. The total addressable memory space can be expanded up to 16 Mbytes for future members of the ST10x166 family.

Figure 3-1. Memory Segment And Page Arrangement

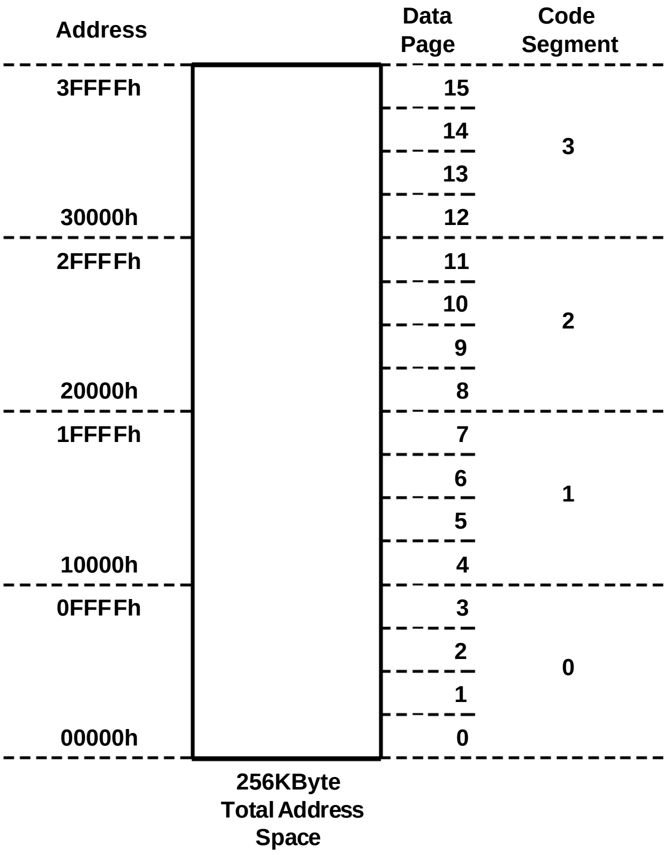
Address
Data Page
Code Segment
3FFFFh
30000h
2FFFFh
20000h
1FFFFh
10000h
0FFFFh
00000h
15
14
13
12
11
10
9
8
7
6
5
4
3
2
1
0
3
2
1
0
256KByte Total Address Space

Bytes are stored at even or odd byte addresses. Words are stored in ascending memory locations with the low byte at an even byte address being followed by the high byte at the next odd byte address. Double words (code only) are stored in ascending memory locations as two subsequently following words. Single bits are always stored in the specified bit position at a word address. Bit position 0 is the least significant bit of the byte at an even byte address, and bit position 15 is the most significant bit of the byte at the next odd byte address.

Figure 3-2. Word, Byte And Bit Storage In a Byte Organised Memory (Example)

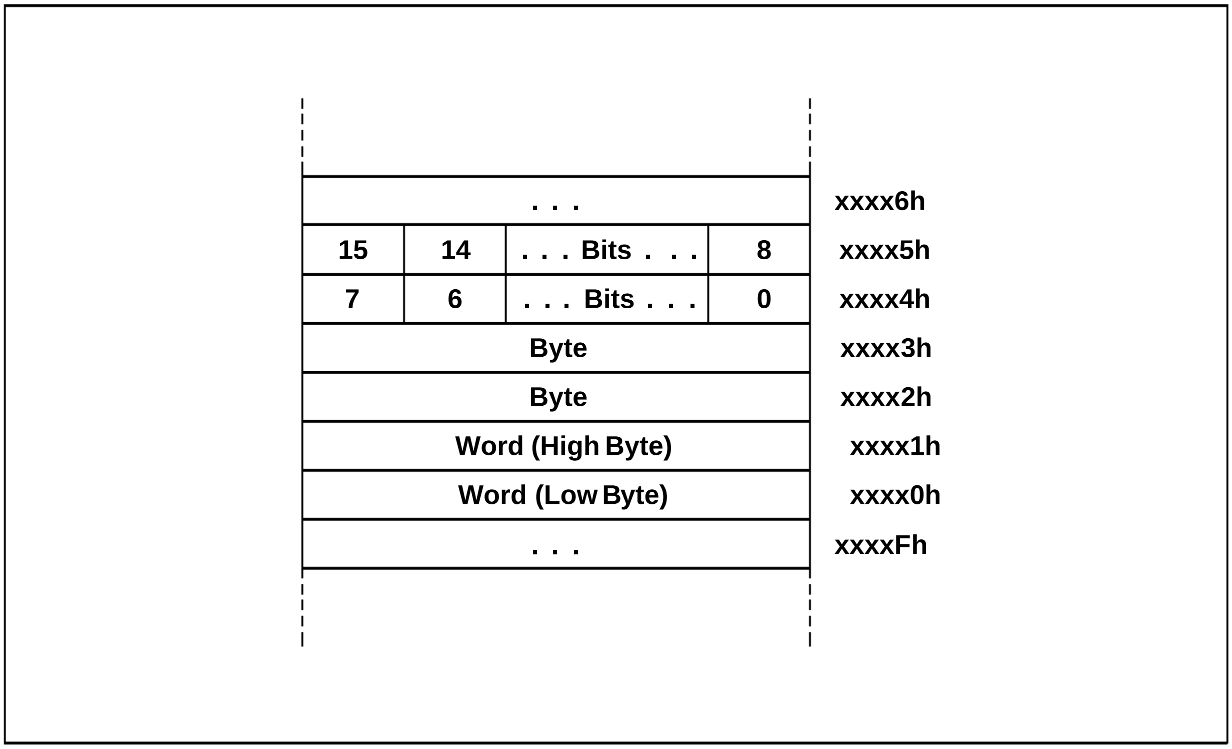

Table 3.1 shows how the different memory areas are mapped into the physical 256Kbyte address space. Basically, all of the internal memory areas (ROM or FLASH memory, RAM, SFRs) are mapped into parts of memory segment 0. The external memory is mapped into the remaining parts of memory segment 0 and into memory segments 1 through 3. Whenever the Program memory has been disabled during reset, or remapped to segment 1 during initialisation, the lowest 32Kbytes of segment 0 also specify an external memory area.

Table 3-1. Memory Address Space Mapping

Address Space	Memory Range	Size (Bytes)
00000h - 07FFFh	**Internal Program Memory Segment 0 or External Memory**	**32K**
08000h - 0F9FFh	**External Memory**	**30.5K**
0FA00h - 0FDFFh	**Internal Memory (RAM)**	**1K**
0FE00h - 0FFFFh	**Internal SFRs**	**512**
10000h - 17FFFh	**Internal Program Memory Segment 1 or External Memory**	**32K**
18000h - 3FFFFh	**External Memory**	**160K**

The internal program memory, the internal RAM and the external memory space can be used for general code and data storage. The internal SFR space is provided for control data, but not for code storage.

Note that byte units forming a single word or a double word must always be stored within the same physical and organizational memory area (page, segment).

A particular use is provided for some memory areas, as follows. Addresses from 00000h to 000BFh in code segment zero are reserved for the hardware trap and interrupt vector jump table. The active General Purpose Register Bank which is selected by the Context Pointer (CP) Register can be situated anywhere in the internal RAM area (addresses from 0FA00h to 0FDFFh). Word addresses from 0FA00h to 0FBFEh in the internal RAM can basically be used for the system stack implementation. The highest 32 bytes of the internal RAM (addresses from 0FDE0h to 0FDFFh) are provided for the Peripheral Event Controller (PEC) source and destination pointers. Three memory spaces (from 0FF00h to 0FFDFh in the internal SFR area, from 0FD00h to 0FDFFh in the internal RAM area, and the address space occupied by the currently selected register bank) are basically provided for single bit accesses.

Figure 3.3 gives an overview of the memory organization of the ST10x166. For more details about the different memory areas see the corresponding subsections in this chapter. The principles of the physical address generation are described in section 6.2 (Addressing Modes). Chapter 9 is dedicated to the External Bus Controller which is responsible for all of the memory accesses made externally.

Figure 3-3. Memory Organization

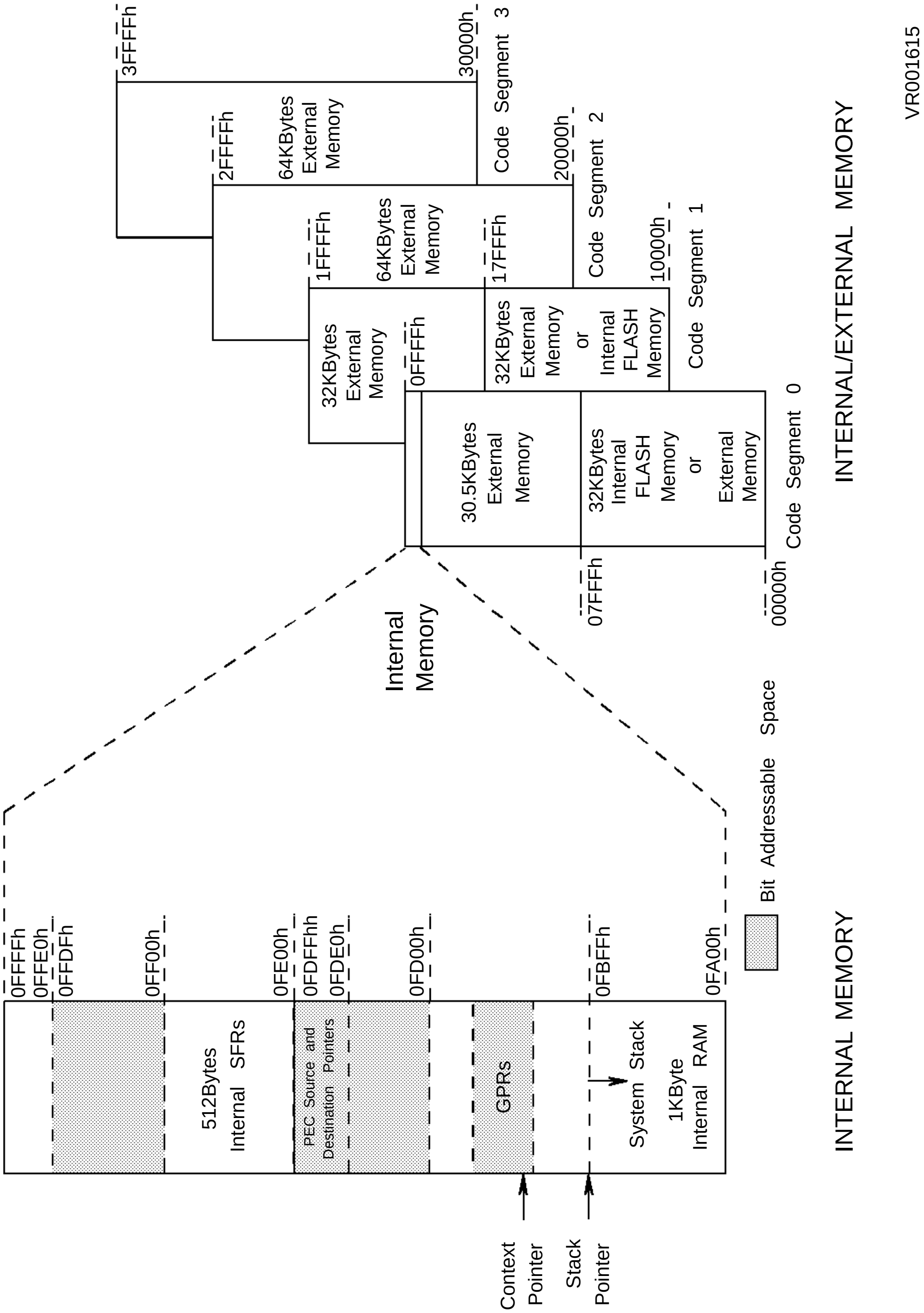
3FFFFh
30000h
64KBytes External Memory
Code Segment 3
2FFFFh
20000h
64KBytes External Memory
Code Segment 2
1FFFFh
17FFFh
10000h
32KBytes External Memory
32KBytes External Memory or Internal FLASH Memory
Code Segment 1
0FFFFh
30.5KBytes External Memory
32KBytes Internal FLASH Memory or External Memory
07FFFh
00000h
Code Segment 0
INTERNAL/EXTERNAL MEMORY
VR001615
Internal Memory
0FFFFh
0FFE0h
0FFDFh
0FF00h
0FE00h
0FDFFh
0FDE0h
0FD00h
0FBFFh
0FA00h
512Bytes Internal SFRs
PEC Source and Destination Pointers
GPRs
System Stack
1KByte Internal RAM
Context Pointer
Stack Pointer
Bit Addressable Space
INTERNAL MEMORY

3.1 INTERNAL PROGRAM MEMORY

The Program memory is an on-chip mask-programmable ROM for the ST10166, and on-chip reprogrammable FLASH memory for the ST10F166. The memory is organized in 8Kx32bits and mapped in the same segment memory: segment 0 during reset or segment 1 if remapped during initialization. This program memory is enabled during reset with the pin $\overline{\text{BUSACT}}$ high and the external bus configuration pins EBC1 and EBC0 low. This mode is named the Single Chip Mode. For further details about the external bus configuration see chapter 9.

The internal Program memory can be used for both code and data storage. The highest possible code storage location in this memory is 07FFEh for 16-bit instructions or 07FFCh for 32-bit instructions. A branch instruction is needed to cross the boundary between the internal Program memory to the external memory, otherwise this would cause erroneous results.

No short addressing mode and bit addressable mode are allowed for any accesses to the internal Program memory. For PEC data transfers, these accesses are independent of the contents of the DPP registers via the PEC source and destination pointers.

Whenever a reset, hardware trap or interrupt occurs, or whenever a software TRAP instruction is executed, and provided that the Program memory accesses are enabled, program execution branches to an implicit internal address independent of the current Code Segment Pointer (CSP) register contents, expecting a jump vector being situated there. For detailed information about the trap and interrupt jump vector table see section 9.1 “Interrupt System Structure”.

With the possibility to remap the internal Program memory to segment 1 during initialization, however,the user can configure the device with common routines and constants programmed into the Program memory to have a fast execution speed and with the interrupt vector programmed into External memory.

For the ST10F166, the special features of the FLASH memory are described in the FLASH memory chapter 4.

3.2 EXTERNAL MEMORY

Basically, the ST10x166 provides for up to 4 x 64Kbytes of external ROM and/or RAM which may be organized in either 8 or 16 bits. Since a part of the first 64Kbytes address space is already occupied by the on-chip memory areas, only 62.5Kbytes (30.5Kbytes for the ST10F166 and ST10166 with internal program memory enabled) of external memory are really available in segment 0.

The bus mode for external memory accesses is selected during reset by means of the external bus configuration pins, $\overline{\text{BUSACT}}$, EBC1 and EBC0. According to there logic levels, external memory accesses are either enabled or disabled during reset, as shown in chapter 9. The selected external bus configuration is saved in the BTYP bit field in the SYSCON register. During the initialization routine, however, the user has the option to change any configuration which was selected during reset. After the EINIT instruction, only the external bus configuration can be changed at any time.

For further details about the external bus configuration and control see chapter 9 “External Bus Interface”.

The external memory can be used for both code and data storage. If the ST10x166 segmentation mode is disabled (SGTDIS bit in the SYSCON register contains a ‘1’), all external memory accesses are restricted to segment 0 only. Code accesses are always made on even byte addresses. Thus, the highest possible external code storage location in segment 0 is either 0F9FEh for single word instructions or 0F9FCh for double word instructions. If used for code storage, the corresponding location must contain a branch instruction, because sequential boundary crossing from the external memory to the internal RAM space is not provided and would cause erroneous results. In any segment other than 0, the highest code storage location is either xFFFEh for single word instructions or xFFFCh for double word instructions (x=1, 2, 3). If used for code storage, the corresponding location must contain a branch instruction, because segment crossing for program execution is only possible by changing the CSP register contents by means of the particular branch instructions JMPS and CALLS.

External word and byte data can only be accessed via indirect or long 16-bit addressing modes in collaboration with the DPP registers. There is no short addressing mode for external operands. Any word data access is made to an even byte address.

Thus, the highest possible word data storage locations in the external memory are address 0F9FEh in segment 0, and addresses xFFFEh in all other segments (x=1, 2, 3). For PEC data transfers, the external memory in segment 0 can be accessed independent of the contents of the DPP registers via the PEC source and destination pointers.

The external memory is not provided for single bit storage, and thus it is not bit addressable.

Whenever a reset, a hardware trap or an interrupt occurs, or whenever a software TRAP instruction is executed, and provided that internal program memory accesses are disabled, program execution branches to an implicit external memory address independent of the current CSP register contents, expecting a jump vector being situated there. For detailed information about the trap and interrupt jump vector table see section 7.1 'Interrupt System Structure'.

3.3 INTERNAL RAM

The ST10x166 contains 1Kbyte of on-chip dual port RAM which is organized in 512x16 bytes. Internal RAM accesses are always enabled.

The system stack, the General Purpose Registers (GPRs) and the PEC source and destination pointers are situated within the internal RAM space. Additionally, the internal RAM can be used for both code and data storage. The ST10x166 assembler supports the reservation of the required internal RAM areas according to the just mentioned particular uses.

Code accesses are always made on even byte addresses. Provided that the PEC source and destination pointers are not required, the highest possible code storage location in the internal RAM is either 0FDFEh for single word instructions or 0FDFCh for double word instructions. If used for code storage, the corresponding location must contain a branch instruction to a memory location other than in the SFR space, because this space is not provided for code execution.

Any word and byte data in the internal RAM can be accessed via indirect or long 16 bit addressing modes if the selected DPP register points to data page 3. Any word data access is made on an even byte address. Provided that the PEC source and destination pointers are not required, the highest possible word data storage location in the internal RAM is address 0FDFEh. For PEC data transfers, the internal RAM can be accessed independent of the contents of the DPP registers via the PEC source and destination pointers.

All system stack operations are implicitly performed by means of the Stack Pointer (SP) register. The GPRs are accessed via short 2-, 4- or 8-bit addressing modes in collaboration with a particular Context Pointer (CP) register. The channel number of a PEC data transfer to be performed determines which PEC source or destination pointers will be implicitly accessed. All of the just mentioned implicit internal RAM accesses are made independent of the current DPP register contents.

The upper portion of the internal RAM (addresses from 0FD00h to 0FDFFh) and the currently active GPRs are provided for single bit storage, and thus they are bit addressable.

The following subsections describe in more detail the organization of the system stack, of the GPRs and of the PEC source and destination pointers.

3.3.1 System Stack

The internal RAM address space from 0FBFFh downward to 0FA00h is basically provided for the ST10x166's system stack implementation. The default maximum stack size of 256 words can easily be reduced by changing the stack size (STKSZ) bit field in the SYSCON register, as shown in the following table.

Table 3-2. Maximum System Stack Size Selection

STKSZ	Stack Size (words)	Internal RAM Addresses (in descending order)
00b	**256**	**0FBFFh - 0FA00h (default)**
01b	**128**	**0FBFFh - OFB00h**
10b	**64**	**0FBFFh - OFB80h**
11b	**32**	**0FBFFh - 0FBC0h**

For all system stack operations, the on-chip RAM is accessed via the Stack Pointer (SP) register. The stack grows downward from higher towards lower RAM address locations. Only word accesses are permitted to the system stack. A stack overflow (STKOV) and a stack underflow (STKUN) register are provided to control when the selected stack area is left. These two stack boundary registers can be used not only for protection against data destruction, but also to implement a circular stack with hardware supported system stack flushing and filling.

For further details about system stack addressing via the SP register and the use of the STKOV and STKUN registers see section 5.3 'CPU Special Function Registers'.

3.3.2 General Purpose Registers

The ST10x166's GPRs can basically be situated anywhere within the internal RAM address space (addresses from 0FA00h to 0FDFFh). A particular Context Pointer (CP) register determines the base address of the currently active register bank. This register bank may consist of up to 16 word GPRs (R0, R1, ..., R15) and/or of up to 16 byte GPRs (RL0, RH0, ..., RL7, RH7). The sixteen byte GPRs are mapped onto the first eight word GPRs, as shown in figure 3.4.

In contrast to the system stack, a register bank grows from lower towards higher address locations and occupies a maximum space of 32bytes. Short 4- and 8-bit addressing modes in collaboration with the CP register support word or byte GPR ac-

Figure 3-4. Word and Byte GPR Organization

WORD Register R15		
WORD Register R14		
WORD Register R13		
WORD Register R12		
WORD Register R11		
WORD Register R10		
WORD Register R9		WORD
WORD Register R8		Register
BYTE Register RH7	BYTE Register RL7	R7
BYTE Register RH6	BYTE Register RL6	R6
BYTE Register RH5	BYTE Register RL5	R5
BYTE Register RH4	BYTE Register RL4	R4
BYTE Register RH3	BYTE Register RL3	R3
BYTE Register RH2	BYTE Register RL2	R2
BYTE Register RH1	BYTE Register RL1	R1
BYTE Register RH0	BYTE Register RL0	R0 ← CP

cesses regardless of the current DPP register contents. Additionally, each bit in the currently active register bank can be accessed individually.

The ST10x166 supports fast register bank (context) switching. Based on that, multiple register banks can physically exist in the internal RAM at the same time. However, only the register bank selected by the CP register is active, and the remaining register banks are inactive at that time. Selecting a new active register bank is simply done by updating the CP register. A particular Switch Context (SCXT) instruction performs register bank switching and an automatic saving of the previous context. Any number of variously sized register banks, only limited by the available internal RAM size, can be implemented simultaneously.

For more details about GPR addressing via the CP register, see the chapter 5. Advanced programming methods for an optimum utilization of the GPRs' features such as Context Switching, Context Packing, Overlapping Register Banks, Local GPRs on the system stack and so on, are described in chapter 13 'System Programming'.

3.3.3 Pec Source and Destination Pointers

The upper 16 word locations in the internal RAM (addresses from 0FDE0h to 0FDFEh) are provided as source and destination address pointers for PEC data transfers.

As shown in figure below, a pair of source and destination pointers is stored in two subsequently following word memory locations with the source pointer (SRCPx) on the lower and with the destination pointer (DSTPx) on the higher word address (x=0 to 7).

Whenever a PEC data transfer is performed, the pair of source and destination pointers which is selected by the specified PEC channel number is accessed independent of the current DPP register contents. If a PEC channel is not used, the corresponding pointer locations can be used for word, byte or single bit data storage.

For more details about the use of the source and destination pointers for PEC data transfers refer to chapter 7.

Figure 3-5. PEC Source And Destination Pointer Word Organization

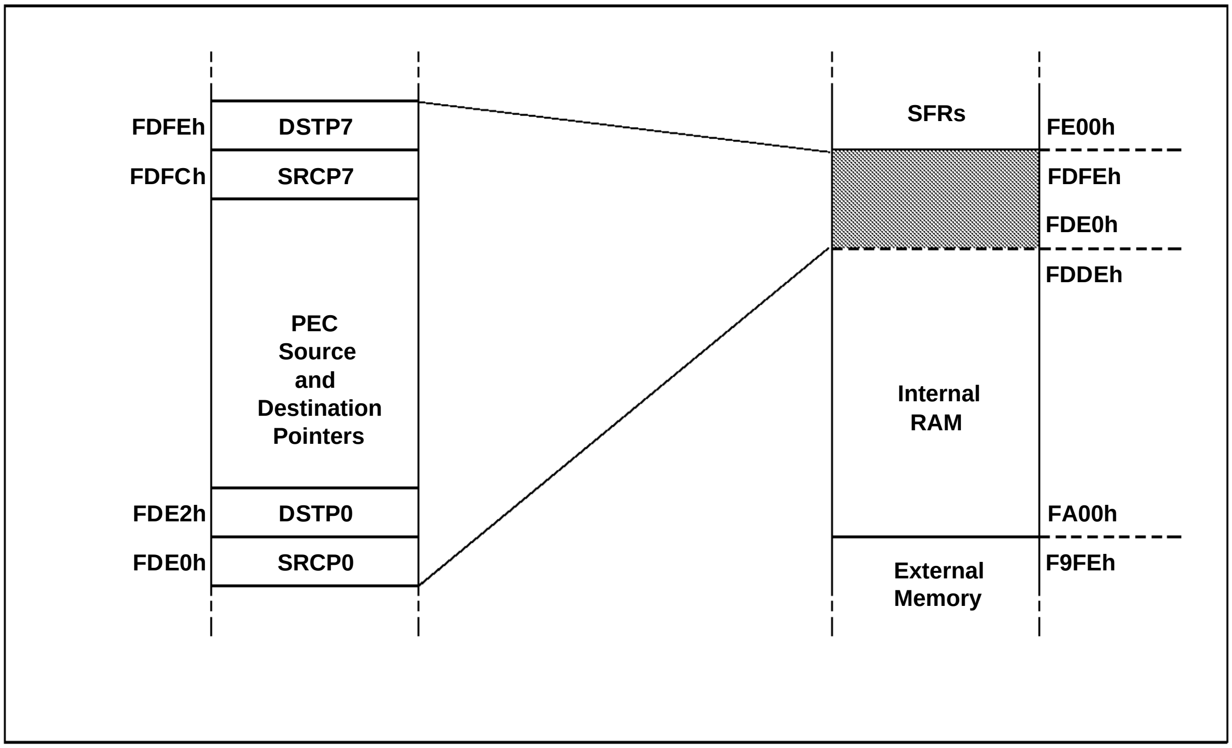
FDFEh
DSTP7
FDFCh
SRCP7
PEC Source and Destination Pointers
FDE2h
DSTP0
FDE0h
SRCP0
SFRs
FE00h
FDFEh
FDE0h
FDDEh
Internal RAM
FA00h
F9FEh
External Memory

3.4 INTERNAL SPECIAL FUNCTION REGISTERS

The ST10x166 provides 512bytes of on-chip Special Function Register (SFR) space. The SFRs are mapped into the address space from 0FE00h to 0FFFFh.

The SFRs are not provided for general code or data storage, but for data storage dedicated to very particular uses, mainly for controlling CPU, Peripheral and I/O functions.

According to the just mentioned control functions, the SFRs are described in detail in one of the chapters 5 'CPU', 8 'Peripherals', or 10 'Parallel Ports'.

A table containing a short description, symbolic addresses, physical 18-bit and short 8-bit addresses of the SFRs can be found in appendix B.

Most commonly, an SFR can be accessed by word via an implicit base address plus a short 8-bit offset address independent of the current DPP register contents. The low byte portion of an SFR (but not its high byte portion!) can be accessed via these short 8 bit addressing modes. However, provided that the selected DPP register points to data page 3, any high byte, low byte or any word in the SFR memory space can be accessed via an indirect or long 16-bit addressing mode.

The upper portion of the SFR memory space (addresses from 0FF00h to 0FFDFh) contains SFRs with many single flag control functions. Thus, this memory area is directly bit addressable.

Some bits in already existing SFRs and some word locations in the SFR address space have been reserved for a future implementation of additional on-chip peripherals. Any intended write access to such a reserved SFR memory space would be ignored by the machine, and any intended read will supply a read result of '0'.

Note that any byte write to an existing SFR causes the non-addressed complementary byte to be cleared.

Some SFRs or parts of them have a restricted access type such as read-only or write only. For more details, see the functional description of the corresponding SFRs.

CHAPTER 4

ON-CHIP FLASH MEMORY

4. ON-CHIP FLASH MEMORY

The ST10F166 provides, in addition to the on-chip RAM, 32K bytes of Electrically Erasable and Reprogrammable non-volatile (FLASH) memory. This memory is organised as 8Kx32 bits, allowing a complete instruction to be read during one instruction fetch cycle. Data values stored can be read as 16 bit operands using all addressing modes of the ST10x166 instruction set.

The FLASH memory is located in segment 0 (0 to 07FFFh) during reset, and thus contains the power-on reset and interrupt vectors. To provide full flexibility in the use of the ST10F166, the FLASH memory may be remapped to segment 1 (10000 to 17FFFh) during initialization. This allows the interrupt vectors to be programmed from external memory, while retaining the common routines and constants programmed into the FLASH memory.

For erase or program updating, the FLASH memory is organised into 4 banks (12K, 12K, 6K and 2K) each of which may be independently erased.

Optionally the FLASH Memory may be protected against read and write accesses performed by fetch instructions from programs running in the internal RAM or in external memory.

All control of programming and erasing the FLASH memory is made from one Register, the FLASH Control Register (FCR), which is virtually mapped into the FLASH memory space.

The Presto F algorithm is used for reliability. The typical programming time is 100 µs and erase time is 1s. The FLASH memory features a typical endurance of 100 erase/write cycles.

WARNING: **Access to or code execution from the FLASH memory can not be performed during an erase or programming operation on the FLASH memory. Therefore the appropriate routines must be executed from internal RAM or external memory outside of the FLASH memory address range.**

Figure 4-1. Flash Memory Architecture

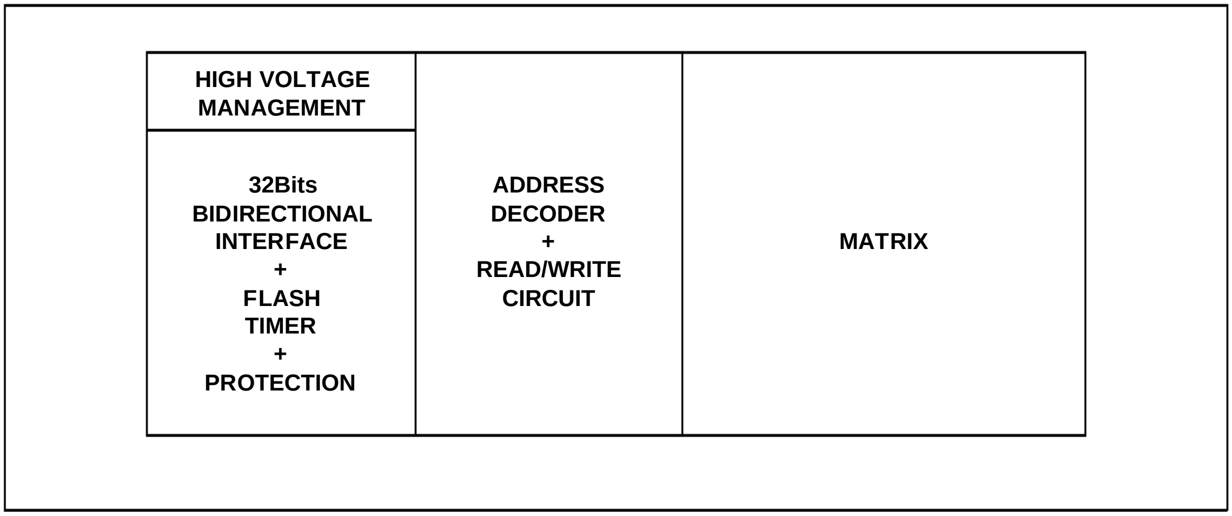
HIGH VOLTAGE MANAGEMENT
32Bits BIDIRECTIONAL INTERFACE + FLASH TIMER + PROTECTION
ADDRESS DECODER + READ/WRITE CIRCUIT
MATRIX

FLASH MODES

This section describes the differents modes used with the FLASH memory and is detailed in the following sections.

Normal mode:

This mode is the standard mode of the FLASH memory. In this operation mode, the FLASH memory works exactly as the 32K bytes ROM of the ST10166 with the same timing and functionality. Therefore only instruction fetches or data operand reads are performed in this mode with all the addressing modes of the ST10x166 instruction set.

No read or write operations on the FCR register are possible in this mode, except the protection bit (RPROT) which can be modified in this mode but only from a program instruction within the FLASH memory.

Write mode:

As it is not possible to fetch instructions from and write to the FLASH memory at the same time, a Write mode has been defined. In this mode FLASH memory accesses can be made only with indirect addressing modes and FCR register is accessed with direct access modes.

In Write mode, all programming and erase operations on the FLASH memory are controlled by software with the Flash Control Register (FCR). Therefore to write the FLASH memory, the FWE bit of FCR register has to be set to “1”.
To enter the Write Program mode, the FEE bit of FCR register has to be cleared. If FEE and FWE of FCR register are set to ”1”, the Erase mode is entered.

In these two modes, a Verify mode is automatically entered when the programming or erase operation is ended, respectivly Program Verify Mode (PVM) and Erase Verify Mode (EVM).

Figure 4-2. Flash Modes Description

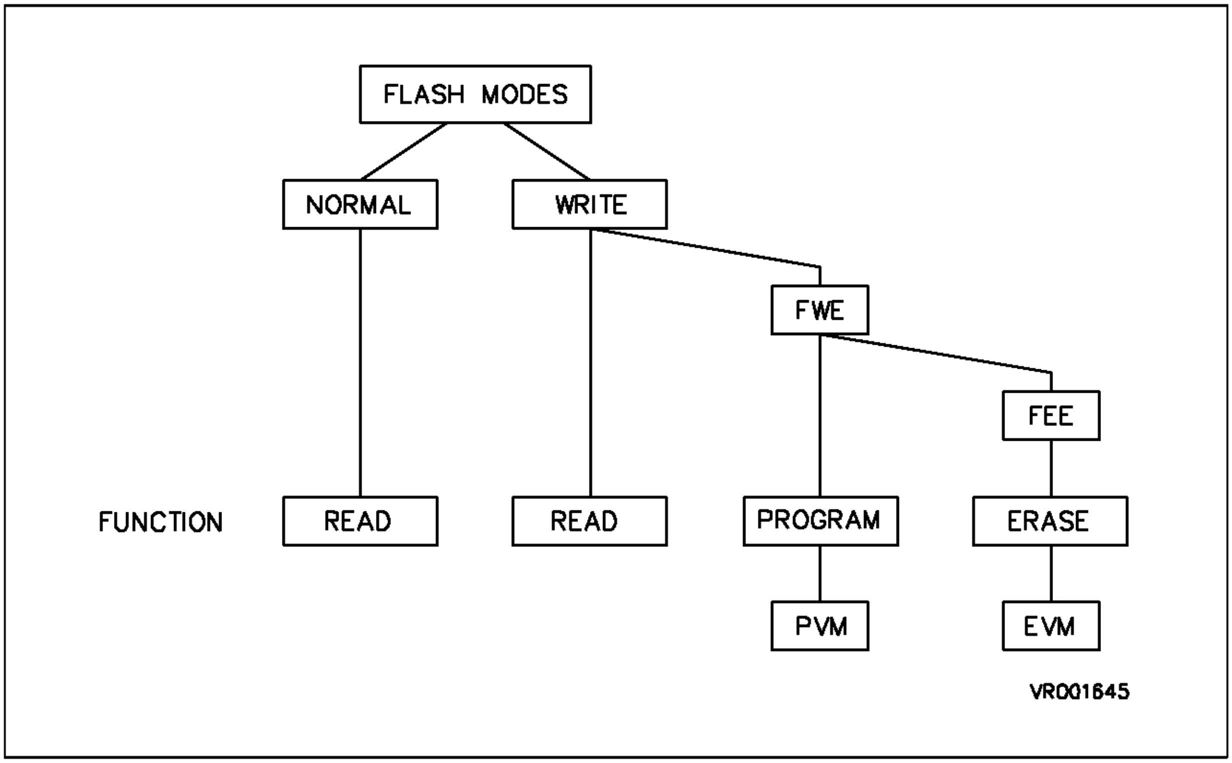

FLASH CONTROL REGISTER

During the normal operation mode, the FLASH memory is read as normal ROM memory with all addressing modes of the ST10x166.

All programming(1) or erase operations of the FLASH memory are controlled via the Flash Control Register (FCR).

To prevent inadvertent writing of the FLASH memory, FCR is locked and inactive during the normal operation modes. The FLASH memory must be set into the Write mode to provide a valid access to the FCR. A key code sequence is used to enter the Write mode.

The FCR is virtually located within the address space of the FLASH memory (it does not occupy an absolute address) and is only accessed with a direct addressing mode.

When the segmented memory mode is enabled, the data page pointer must be considered for all FCR accesses.

Note 1: **According to the IEEE Standard on floating gate arrays, the following terminology is used: writing means a state change of the floating gate, programming means the loading of electrons onto the floating gate, erase means the removal of electrons from the floating gate.**

FCR

Flash Control Register

Reset Condition: 0000h

15	14	13	12	11	10	9	8
FWMSET	R					BE1	BE0

7	6	5	4	3	2	1	0
WDWW	CKCTL1	CKCTL0	VPPRIV	FCVPP	FBUSY RPROT	FEE	FWE

b15 = FWMSET: **will be set at a logical "1", once the Write mode has been entered. This bit must be set to "1" at each writing of the FCR for an erase or programming operation. It will stay set at "1" when the operation has ended. The user must reset FWMSET to exit from the FLASH memory Write mode. At "0" during reset.**

b14 to b10 = R : **reserved for future development, must be written to "0".**

b8,9 = BE0,1 : **select the different Banks for Erase as shown in the following Table:**

In state "0" during reset.

BE1	BE0	Bank	Addresses (segment0)
0	**0**	**0**	**00000h to 02FFFh**
0	**1**	**1**	**03000h to 05FFFh**
1	**0**	**2**	**06000h to 077FFh**
1	**1**	**3**	**07800h to 07FFFh**

b7= WDWW : **if set at a logical "1", enables a 32 bit operation, otherwise it will be a 16 bit operation. At "0" during reset.**

b5,6 = CKCTL0,1 : **select the FLASH internal timer as shown in Table below:**

In state "0" during reset.

CKCTL1	CKCTL0	TPRG 1/TCL = 2 to 40MHz
0	**0**	**4.10^{2} TCL**
0	**1**	**4.10^{3} TCL**
1	**0**	**4.10^{4} TCL**
1	**1**	**4.10^{5} TCL**

The maximum programming pulse (PT) allowed is 200µs with a maximum programming time of 2.5ms. Therefore the value '00b' covers all the frequency range.
The maximum erasing pulse (ET) allowed is 10ms with a maximum erasing time of 30s.
At 20MHz CPU clock, '11b' is the recommended value. At 1MHz CPU clock, '01b' is the recommended value. For all other frequencies, '10b' is recommended

b4 = VPPRIV: **READ ONLY bit reflects the status of VPP in the write mode. If VPP is not high enough for reliable programming, it will be at a logical "0". The reset value depends on the status of the external Vpp on the EBC1/Vpp pin.**

b3 = FCVPP: **READ ONLY bit, if set at a logical "1", will indicate to the user that VPP voltage has gone below the programming threshold during a programming or erase operation. At "0" during reset.**

b2 = FBUSY: **READ ONLY bit is set at a logical "1" during a program/erase operation. At "0" during reset.**

b2 = RPROT: **WRITE ONLY bit is used when the protected FLASH option is chosen. This bit, set at a logical "1" and with the option selected, will enable protection. At "1" during reset.**

b1= FEE : **if set at a logical "1", will enable the erase operation; otherwise "0" for the programming operation. At "0" during reset.**

b0= FWE: **if set at a logical "1", will enable the writing operation; the programming or erase operation is selected depending on the state of FEE bit; otherwise "0" for reading mode. At "0" during reset.**

FLASH MEMORY PROTECTION

A programmable option, set by the FLASH Programming Board, prevents any access to the FLASH memory from the internal RAM or External memory.

When this option is enabled, the configuration of the FLASH memory depends on the RPROT bit of FCR.

Protection Option Enabled	RPROT bit	Protection Active
Yes	**1**	**Yes**
Yes	**0**	**No**
No	**1**	**No**
No	**0**	**No**

This bit is set at "1" during reset, so any access to the FLASH memory from the internal RAM or External memory is disabled and access to FCR is allowed only from the FLASH memory.

To disable the protection, the following instruction has to be performed in the normal mode and from the FLASH memory ONLY:

```
MOV   MEM,Rn
```

where MEM is any even absolute address in the FLASH memory space. The RPROT bit of FCR (bit 2 of Rn) must be reset, the other bits of FCR are protected in the normal mode and are not affected.

When the protection is disabled, reading of the FLASH memory can be performed from all internal or external memory. Access to FCR register and the FLASH programming or erase operations is available only after having entered the Write mode.

THE WRITE MODE

To enter the Write mode a key code sequence of two dummy write instructions has to be performed:

```
MOV   MEM,Rn
MOV   [Rn],Rn
```

where MEM is any even absolute address in the FLASH memory space and Rn a General Purpose Register loaded with the even address of any value within the FLASH memory address space (segment 0 or segment 1).

The FWMSET bit of FCR is automatically set by the unlock sequence.

Once in Write mode, all read and write accesses to FCR are enabled. However, before performing the FIRST programming or erase operation, a delay of 10µs must be executed. The device requires this time to set up the internal high voltage.

When the FLASH memory is mapped in segment 0, it is recommended to disable the interrupts when in write mode, as they would not be served if the program code is the FLASH memory.

When the FLASH memory is mapped in segment 1, some care must be taken for the management of interrupts during the write mode.

The unlock sequence and the 32-bit programming sequence must not be interrupted.

All erase or programming operations and verify sequences can be interrupted, if no FLASH reading is performed from an external program (internal RAM or external memory) during the interrupt.

To exit from the Write mode to the normal mode, the following instruction has to be performed:

```
MOV   MEM,Rn
```

where bit 15 of Rn must be "0" to disable the Write mode (FWMSET) and MEM is any even absolute address in the FLASH memory space.

Note: **When the segmented memory mode is enabled, the data page pointer must be considered for all FLASH memory accesses.**

FLASH PROGRAMMING OPERATION

After the Write mode has been entered, the FLASH memory is accessed for programming with indirect addressing mode instructions. One or two words (word = 16 bits) can be programmed at once, depending on the WDWW bit value of FCR.

A programming operation is realized with the following sequence:

- **Test VPPRIV bit of FCR to verify the correct voltage on VPP.**
- **Load the desired value in FCR.**

15	14	13	12	11	10	9	8
FWMSET	R					BE1	BE0
1	0	0	0	0	0	0	0

7	6	5	4	3	2	1	0
WDWW	CKCTL1	CKCTL0	VPPRIV	FCVPP	FBUSY	FEE	FWE
0/1	0/1	0/1	0	0	0	0	1

As FCR is a virtual register, all bits previously written must be confirmed in the same state at each FCR writing (especially FWMSET).

- Write the FLASH memory

e.g. for one word

```
MOV   [Rm],R1
```

for two words

```
MOV   [Rm],R1
MOV   [Rm],R2
```

The address used for a long word write (32 bits) Rm must be an aligned even address (xxx0h, xxx4h, xxx8h, xxxCh...) and is used as a base pointer for the FLASH memory writing. The two words to write must be contiguous, aligned at an even address.
R1 contains the data to write at the first address and R2 contains the data to write at the following even word address.

- **FLASH programming will automatically start. The programming time depends on CKCTL0,1 bits of FCR. End of programming is detected by polling on the FBUSY bit of FCR.**
- **Test FCVPP bit of FCR to verify that VPP had the correct voltage during programming.**
- **After programming, the FWE bit remains at a logical “1”. The Program Verify Mode (PVM), is then entered automatically. An internally generated margin voltage is applied to the FLASH, and reading valid data indicates the word has been programmed successfully.**

PVM needs a double read instruction with the same operand and time to stabilize the internal circuitry.

e.g.

```
        MOV   R1,[R2]
;       Time out of 4µs
        MOV   R1,[R2]
```

- **To perform normal reading of the FLASH memory, the FWE bit must be reset.**

A programming operation of the FLASH memory can not be performed with a routine in the FLASH memory itself.

FLASH ERASE OPERATION

As for the programming operation, FLASH memory erase can be performed only inside the Write mode, with indirect addressing mode instruction.

One of the four Banks is erased performing this operation, depending on the BE0,1 bits of FCR.

An erase operation is realized with the following sequence:

- Program all the words of the relevant bank to 0000h.
- **Test VPPRIV bit of FCR to verify the correct voltage on VPP.**
- **Load the desired value in FCR.**

15	14	13	12	11	10	9	8
FWMSET	R					BE1	BE0
1	0	0	0	0	0	0/1	0/1

7	6	5	4	3	2	1	0
WDWW	CKCTL1	CKCTL0	VPPRIV	FCVPP	FBUSY	FEE	FWE
0	0/1	0/1	0	0	0	1	1

As FCR is a virtual register, all bits previously written must be confirmed in the same state at each FCR writing (especially FWMSET).

- Perform the erase command

  e.g. `MOV [R0],R0`

This special instruction for erase, guarantees users against inadvertent operation.

- FLASH erase will automatically start. The erase time depends on CKCTL0,1 bits of FCR. End of erase is detected by polling on the FBUSY bit of FCR.
- Test FCVPP bit of FCR to verify that VPP had the correct voltage during erase.
- Then all the FLASH memory must be read to verify the completely correct erasure. After erasure, bits FWE and FEE remain at a logical “1”. The Erase Verify Mode (EVM), is then entered automatically.
  An internally generated margin voltage is applied to the FLASH memory. If the memory location is erased, the Erase Verify is repeated for the next location. This process continues for each word of the array until the last address is accessed or a word does not return FFFFh. In this case where the word is not erased, another erase operation must be performed.

EVM needs a double reading instruction with the same operand, and time for stabilizing the internal circuitry.

e.g.

```
MOV  R1,[R2]
Time out of 4ms
MOV  R1,[R2]
```

- To perform a normal FLASH reading, the FWE,FEE bits must be reset.

The erase of one bank can not be performed from another bank of the FLASH memory.

PRESTO F PROGRAM WRITE ALGORITHM

Programming with Presto F algorithm consists of applying a sequence of program pulses to each word until correct verify occurs. A maximum of programming operations are allowed for each word. Each program operation consists of a program command; the programming is then automatically performed. After a time out of 4µs a Program Verify is then performed which compares data output with data expected. This sequence guarantees that each cell is programmed reliably.

Figure 4.3 illustrates the Presto F Program Write Algorithm.

As the program pulse varies in inverse ratio to the frequency, PT=400 TCL, the number of operations allwed varies also:
N=6250/TCL with I/TCL= 2 to 40MHz.

PRESTO F ERASE ALGORITHM

Erasing with Presto F algorithm allows the electrically erasing of the selected Bank in reliable way.

The algorithm starts by first programming all the words to 0000h in order to perform an uniform erasure. This step is performed by using the Presto F Program Write Algorithm.

The erase command (see erase operation) is written and erase is performed. An Erase Verify begins at the first address and continues until the last address is accessed or until the comparison of data to FFFFh fails. The address of the last word verified is stored and a new erase operation is performed. Then the Erase Verify restarts from the stored address.

Figure 4.4 illustrates the Presto F Erase Algorithm.

As the erasing pulse (ET) varies in inverse ratio to the frequency, the number of erasing operation varies also:
at 1MHz CPU clock ET = 2ms, N = 15000
at 40 MHz CPU clock ET = 10ms, N = 3000
for other frequencies ET = 4.10^4 TCL,
N = 75.10^4/TCL

Figure 4-3. Presto F Program Write Algorithm

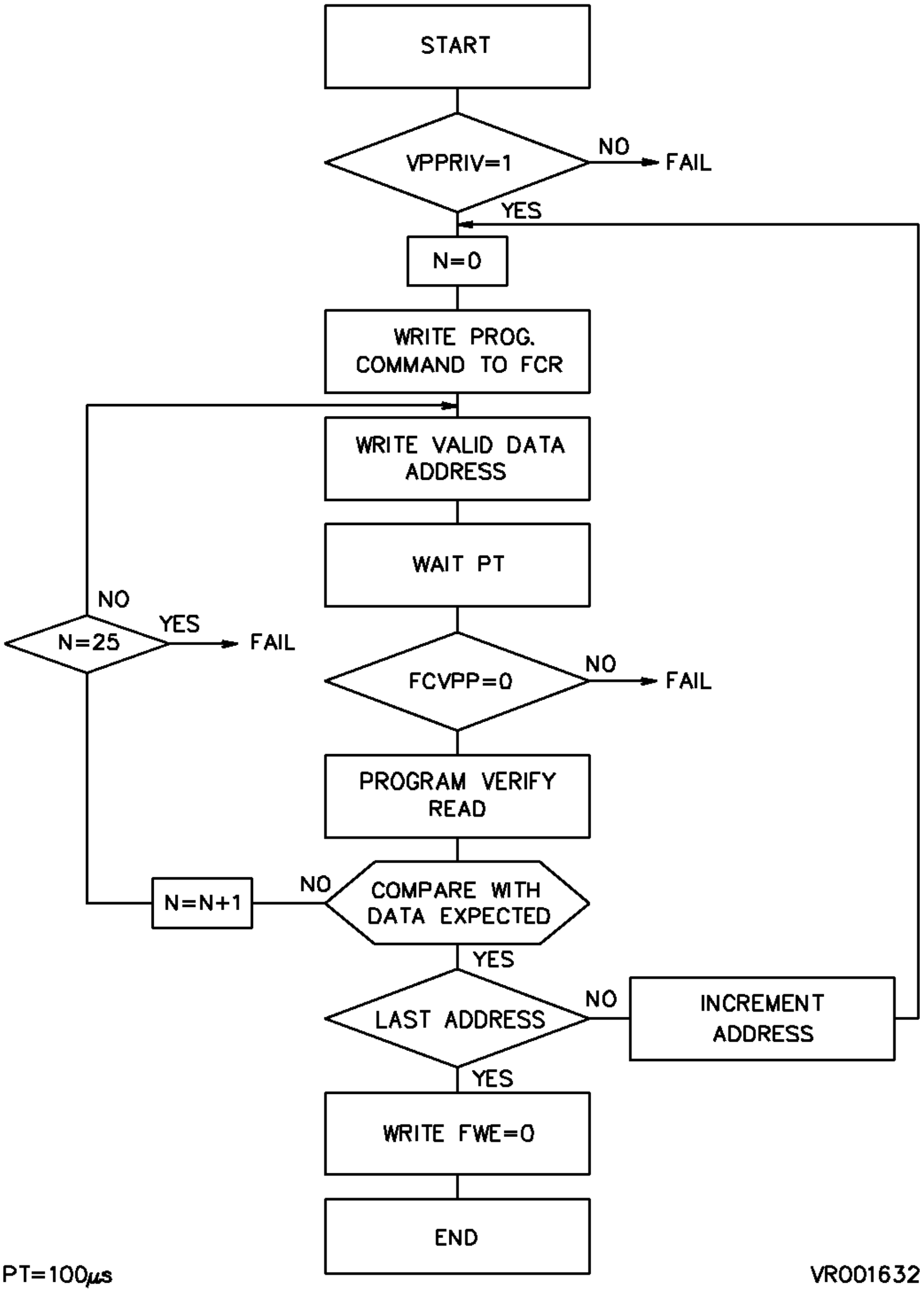
START
VPPRIV=1
NO
FAIL
YES
N=0
WRITE PROG. COMMAND TO FCR
WRITE VALID DATA ADDRESS
WAIT PT
NO
N=25
YES
FAIL
FCVPP=0
NO
FAIL
PROGRAM VERIFY READ
N=N+1
NO
COMPARE WITH DATA EXPECTED
YES
LAST ADDRESS
NO
INCREMENT ADDRESS
YES
WRITE FWE=0
END
PT=100µs
VR001632

Figure 4-4. Presto F Erase Algorithm

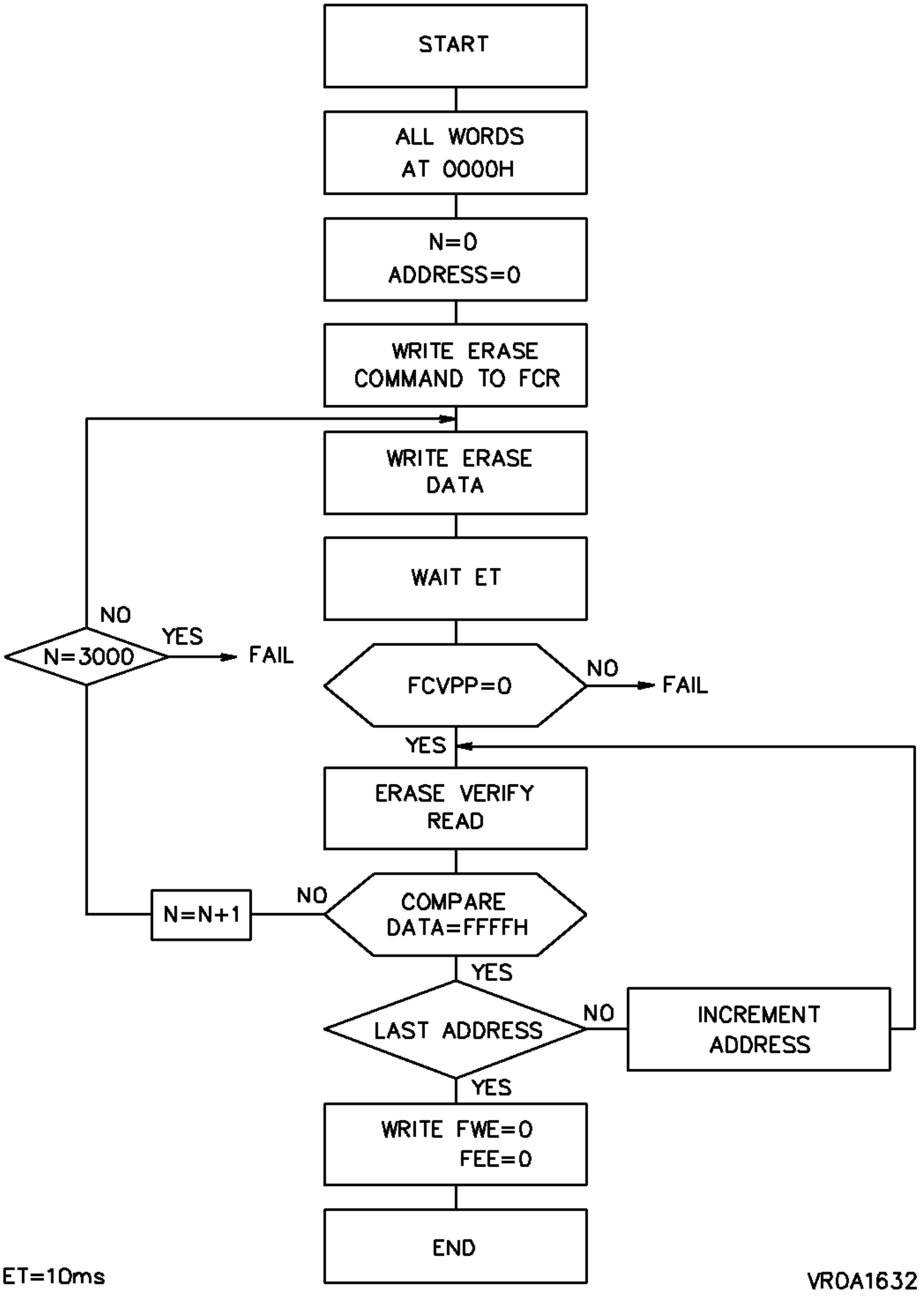
START
ALL WORDS AT 0000H
N=0
ADDRESS=0
WRITE ERASE COMMAND TO FCR
WRITE ERASE DATA
WAIT ET
FCVPP=0
NO
FAIL
YES
ERASE VERIFY READ
COMPARE DATA=FFFFH
NO
N=N+1
N=3000
NO
YES
FAIL
YES
LAST ADDRESS
NO
INCREMENT ADDRESS
YES
WRITE FWE=0
FEE=0
END
ET=10ms
VR0A1632

CHAPTER 5

CENTRAL PROCESSING UNIT (CPU)

5. CENTRAL PROCESSING UNIT

Basic tasks of the CPU are to fetch and decode instructions, to supply operands for the arithmetic and logic unit (ALU), to perform operations on these operands in the ALU, and to store the previously calculated results. Since a four stage pipeline is implemented in the ST10x166, up to four instructions can be processed in parallel. Section 5.1 describes how the pipeline works for sequential and branch instructions in general, and which hardware provisions have been made to speed the execution of jump instructions in particular.

With reference to instruction pipelining, most ST10x166 instructions can be regarded as being executed during one machine cycle (=100ns at 40MHz oscillator frequency). Section 5.2 describes the general instruction timing including standard and exceptional timing.

While internal memory accesses are normally performed by the CPU itself, all of the external memory accesses are performed by a particular on-chip External Bus Controller (EBC) which is automatically invoked by the CPU whenever a code or data address belongs to the external memory space. If possible, the CPU continues operating while an external memory access is in progress. If external data are required but are not yet available, or if a new external memory access is requested by the CPU before a previous access has been completed, the CPU will be held by the EBC until the request can be satisfied. Chapter 9 is dedicated to a description of the external bus interface being serviced by the EBC.

The ST10x166 peripherals work nearly independent of the CPU with a separate clock generator. An interchange of data and control information between the CPU and the peripherals is done via Special Function Registers (SFRs). Whenever peripherals non-deterministically need a CPU action, an on-chip Interrupt Controller compares all pending peripheral service requests against each other and prioritizes one of them. If the priority of the current CPU operation is less than the priority of the selected peripheral request, an interrupt will occur.

Basically, there are two types of interrupt processing: One type, the standard interrupt processing, forces the CPU to save the current program status and the return address on the stack before branching to the interrupt vector jump table. The second type, the PEC interrupt processing, steals just one machine cycle from the current CPU activity to perform a single data transfer via the on-chip Peripheral Event Controller (PEC). System errors detected during program execution (so called hardware traps), or an external non-maskable interrupt are also processed as standard interrupts with a very high priority. For more information about interrupts, PEC data transfers and hardware traps see chapter 7.

In contrast to other on-chip peripherals, there is a closer conjunction between the Watchdog Timer and the CPU. If enabled, the Watchdog Timer expects to be serviced by the CPU within a programmable period of time, otherwise it will reset the chip. Thus, the Watchdog Timer is able to prevent the CPU from going totally astray when executing erroneous code. After reset, the Watchdog Timer starts counting automatically, but it can be disabled via software if desired.

By any reset, the CPU is forced into a predefined active state. Further particular CPU states are: The IDLE state where the CPU clock is switched off and the peripheral clocks keep running, and the POWER DOWN state where all of the on-chip clocks are switched off. A transition into an active CPU state is forced by an interrupt if being IDLE, or by a reset if being in POWER DOWN mode, respectively. The IDLE, POWERDOWN and RESET states can be entered by particular ST10x166 system control instructions. For more information on these states see chapter 12.

Section 5.3 describes the Special Function Registers situated within the CPU core which are all dedicated to particular uses, as follows:

- General System Configuration: SYSCON
- Bus Configuration: BUSCON1
- Address Select: ADDRSEL1
- CPU Status Indication and Control: PSW
- Code Access Control: IP, CSP
- Data Paging Control: DPP0, DPP1, DPP2, DPP3
- GPRs Access Control: CP
- System Stack Access Control: SP, STKUN, STKOV
- Multiply and Divide Support: MDL, MDH, MDC
- ALU Constant Support: ZEROS, ONES

5.1 INSTRUCTION PIPELINING

As mentioned in the introductional part of this chapter, a four stage instruction pipeline is implemented in the ST10x166. This means that instruction processing is partitioned in four stages of which each one has its individual task as follows:

1st -> FETCH: In this stage, the instruction selected by the Instruction Pointer and the Code Segment Pointer is fetched from either the internal ROM or FLASH memory, internal RAM, or external memory.

2nd -> DECODE: In this stage, the instructions are decoded, and if required, the operand addresses are calculated and the resulting operands are fetched. For all instructions which implicitly access the system stack, the SP register is either decremented or incremented as specified. For branch instructions, the Instruction Pointer and the Code Segment Pointer are updated with the desired branch target addresses (provided that the branch is taken).

3rd -> EXECUTE: In this stage, an operation is performed on the previously fetched operands in the ALU. Additionally, the condition flags in the PSW register are updated as specified by an instruction. All explicit writes to the SFR memory space and all auto-increment or auto-decrement writes to GPRs used as indirect address pointers are performed during the execute stage of an instruction, too.

4th -> WRITE BACK: In this stage, all external operands and the remaining operands within the internal RAM space are written back.

A particularity of the ST10x166 are the so called injected instructions. These injected instructions are internally generated by the machine to provide the time needed to process instructions which cannot be processed within one machine cycle. They are automatically injected into the decode stage of the pipeline, and then they pass through the remaining stages as every standard instruction. Program interrupts are performed by means of injected instructions, too. Although one will not notice these internally injected instructions in reality, they are introduced here to ease the explanation of the pipeline in the following.

5.1.1 Sequential Instruction Processing

Each single instruction has to pass through each of the four pipeline stages regardless of whether all possible stage operations are really performed or not. Since passing through one pipeline stage takes at least one machine cycle, any single instruction takes at least four machine cycles to be completed. Pipelining, however, allows parallel (this means simultaneous) processing of up to four instructions. Thus, most of the instructions seem to be processed during one machine cycle as soon as the pipeline has been filled once after reset (see figure 5.1).

Instruction pipelining increases the average instruction throughput considered over a certain period of time. In the following, any execution time specification of an instruction always refers to the average execution time due to pipelined parallel instruction processing.

Figure 5-1. Sequential Instruction Pipelining

→	1 Machine Cycle	← time →				
FETCH	I_1	I_2	I_3	I_4	I_5	I_6
DECODE		I_1	I_2	I_3	I_4	I_5
EXECUTE			I_1	I_2	I_3	I_4
WRITE BACK				I_1	I_2	I_3

5.1.2 Standard Branch Instruction Processing

Instruction pipelining helps to speed sequential program processing. In the case that a branch is taken, the instruction which has already been fetched providently is mostly not the instruction which must be decoded next. Thus, at least one additional machine cycle is normally required to fetch the branch target instruction. This extra machine cycle is provided by means of an injected instruction as shown in figure 5.2.

If a conditional branch is not taken, there is no deviation from the sequential program flow, and thus no extra time is required. In this case, the instruction after the branch instruction will enter the decode stage of the pipeline at the beginning of the next machine cycle after decode of the conditional branch instruction.

Figure 5-2. Standard Branch Instruction Processing

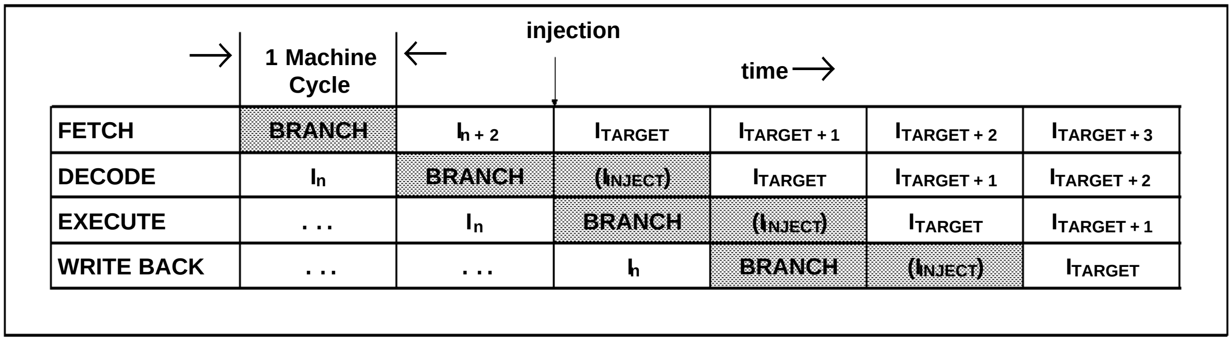

FETCH	BRANCH	I_{n+2}	I_{TARGET}	$I_{TARGET+1}$	$I_{TARGET+2}$	$I_{TARGET+3}$
DECODE	I_n	BRANCH	(I_{INJECT})	I_{TARGET}	$I_{TARGET+1}$	$I_{TARGET+2}$
EXECUTE	. . .	I_n	BRANCH	(I_{INJECT})	I_{TARGET}	$I_{TARGET+1}$
WRITE BACK	. . .	. . .	I_n	BRANCH	(I_{INJECT})	I_{TARGET}

5.1.3 Cache Jump Instruction Processing

A jump cache has been incorporated in the ST10x166 as an optimization of conditional jumps which are processed repeatedly within a loop. Whenever a jump on cache is taken, the extra time to fetch the branch target instruction can be saved, and thus the corresponding cache jump instruction in most cases takes only one machine cycle to be performed.

This performance is achieved by the following mechanism. Whenever a cache jump instruction passes through the decode stage of the pipeline for the first time (and provided that the jump condition is met), the jump target instruction is fetched as usual causing a time delay of one machine cycle. In contrast to standard branch instructions, however, the target instruction of a cache jump instruction (JMPA, JMPR, JB, JBC, JNB, JNBS) is additionally stored in a cache after having been fetched.

After each repeatedly following execution of the same cache jump instruction, the jump target instruction is not fetched but taken from the cache and immediatly injected into the decode stage of the pipeline (see figure 5.3).

A time saving jump on cache is always taken after the second and any further occurence of the same cache jump instruction, unless an instruction which has the fundamental capability of changing the CSP register contents (JMPS, CALLS, RETS, TRAP, RETI) or any standard interrupt has been processed during the period of time between two following occurences of the same cache jump instruction.

Figure 5-3. Cache Jump Instruction Pipelining

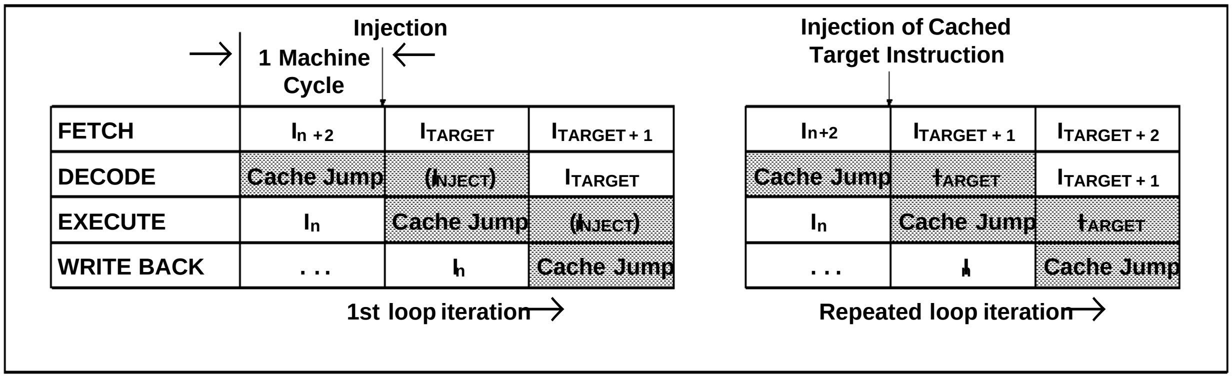

FETCH	I_{n+2}	I_{TARGET}	$I_{TARGET+1}$
DECODE	Cache Jump	(I_{INJECT})	I_{TARGET}
EXECUTE	I_n	Cache Jump	(I_{INJECT})
WRITE BACK	. . .	I_n	Cache Jump

1st loop iteration

I_{n+2}	$I_{TARGET+1}$	$I_{TARGET+2}$
Cache Jump	I_{TARGET}	$I_{TARGET+1}$
I_n	Cache Jump	I_{TARGET}
. . .	I_n	Cache Jump

Repeated loop iteration

5.1.4 Particular Pipeline Effects

Since up to four different instructions are processed simultaneously, additional hardware has been spent in the ST10x166 to consider all causal dependencies which may exist on instructions in different pipeline stages without a loss of performance. This extra hardware (i.e. for ‘forwarding’ operand read and write values) avoids that the pipeline becomes noticeable for the user in most of the cases.

However, there are some very rare cases where one must pay attention to the circumstance that the ST10x166 is a pipelined machine. Intelligent ST10x166 tools like the simulator and the emulator support the user by easing the association with the following particular pipeline effects.

- **Context Pointer Updating**

An instruction which calculates a physical GPR operand address via the CP register is mostly not capable of using a new CP value which is to be updated by an immediately preceding instruction. Thus, if one surely wants the new CP value to be used, one must put at least one instruction between a CP-changing and a subsequent GPR-using instruction, as shown in the following example:

I_n SCXT CP, #0FC00h
; select a new context

I_{n+1} ....
; must not be an instruction using a GPR

I_{n+2} MOV R0, #dataX
; write to GPR 0 in the new context

- **Data Page Pointer Updating**

An instruction which calculates a physical operand address via a particular DPPn (n = 0 to 3) register is mostly not capable of using a new DPPn register value which is to be updated by an immediately preceding instruction. Thus, if one surely wants the new DPPn register value to be used, one must put at least one instruction between a DPPn-changing instruction and a subsequent instruction which implicitly uses DPPn via a long or indirect addressing mode, as shown in the following example:

I_n MOV DPP0, #4
; select data page 4 via DPP0

I_{n+1} ....
; must not be an instruction using DPP0
; (for long or indirect addresses from 0000h
; to 3FFFh)

I_{n+2} MOV 0000h, R1
; move contents of GPR 1 to address
; location 10000h (in data page 4)
; supposed that segmentation is not
; disabled

- **Explicit Stack Pointer Updating**

Any of the RET, RETI, RETS, RETP or POP instructions is not capable of correctly using a new SP register value which is to be updated by an immediately preceding instruction. Thus, if one wants the new SP register value to be used without erroneously performed stack accesses, one must put at least one instruction between an explicitly SP-writing and any subsequent of the just mentioned implicitly SP-using instructions, as shown in the following example:

I_n MOV SP, #0FA40h
; select a new top of stack

I_{n+1} ....
; must not be an instruction popping
; operands from the system stack

I_{n+2} POP R0
; pop the word value from the new top of
; stack into GPR 0

- **External Memory Access Sequences**

The effect described here will only become noticeable if one looks at the external memory access sequences on the external bus (i.e. by means of a Logic Analyzer). Different pipeline stages can simultaneously put a request on the External Bus Controller (EBC). Since the predefined priority of external memory accesses is as follows, 1st Write Data, 2nd Fetch Code, 3rd Read Data, the sequence of instructions processed by the CPU may diverge from the sequence of the corresponding external memory accesses performed by the EBC

.

- **Timing**

As already described, instruction pipelining reduces the average instruction processing time in a wide scale (from four to one machine cycles). However, there are some rare cases where a particular pipeline situation causes a single instruction processing time to be extended either by a half or by one machine cycle. Although this additional time represents only a tiny part of the total program execution time, it might be of interest to avoid these pipeline-caused time delays in time critical program modules.

Besides a general execution time description, section 5.2 provides some hints how one can optimize time-critical program parts with regard to such pipeline-caused timing particularities.

5.2 INSTRUCTION STATE TIMES

Basically, the time to execute an instruction depends on where the instruction is fetched from, and where possible operands are read from or written to. The fastest processing mode of the ST10x166 is to execute a program fetched from the internal program memory. In that case, most of the instructions can be processed within just one machine cycle, which also represents the general minimum execution time.

All of the external memory accesses are performed by the ST10x166 on-chip External Bus Controller (EBC) which works in parallel with the CPU. Mostly, instructions from the external memory can not be processed as fast as instructions from the internal program memory, because some data transfers which internally can be performed in parallel, have to be performed sequentially via the external interface. In contrast to internal program memory program execution, the time required to process an external program additionally depends on the length of the instructions and operands, on the selected bus mode, and on the duration of an external memory cycle which is partly selectable by the user.

Processing a program from the internal RAM space is not as fast as execution from the internal ROM area, but it offers a lot of flexibility (i.e., for end of line programming where a program could be loaded into the internal RAM via the chip's serial interface).

The following description allows evaluating the minimum and maximum program execution times. This will be sufficient for most of the requirements.

This section is arranged in subsections of which the first one defines the subsequently used time units, the second contains an overview about the minimum (standard) state times of the ST10x166 instructions, and the third describes the exceptions from that standard timing.

5.2.1 Time Unit Definitions

The following time units are used to describe the instruction processing times:

[f_{OSC}]: Oscillator frequency (may be variable from 2MHz to 40MHz).

[State]: One state time is specified by two times an oscillator period. Henceforth, one State is used as the basic time unit, because it represents the shortest period of time which has to be considered for instruction timing evaluations.

1 [State] = 2 x 1/f_{OSC} [s]; for f_{OSC} = variable
= 50 [ns] ; for f_{OSC} = 40MHz

[ACT]: This ALE (Address Latch Enable) Cycle Time specifies the time required to perform one external memory access. One ALE Cycle Time consists of either two (for a non-multiplexed external bus mode) or three (for a multiplexed external bus mode) state times plus a number of state times which is determined by the number of wait states programmed in the MCTC (Memory Cycle Time Control) and MTTC (Memory Tristate Time Control) bit fields of the SYSCON register plus one state time if ALECTL1 bit of ADDRSEL1 register is set to '1'.
In the case of the non-multiplexed external bus mode:

1xACT =(2+(15 - MCTC)+(1- MTTC) +(ALECTL1))xStates
= 100ns ... 900ns ; for f_{OSC} = 40MHz

In the case of the multiplexed external bus modes:

1x ACT=3 + (15 -MCTC) + (1 - MTTC +(ALECTL1)) x States
= 150ns ... 950ns ; for f_{OSC} = 40MHz

The total time (T_{tot}) which a particular part of a program takes to be processed can be calculated by the sum of the single instruction processing times (T_{In}) of the considered instructions plus an offset value of 6 state times which considers the solitary filling of the pipeline, as follows:

$T_{tot} = T_{I1} + T_{I2} + ... + T_{In} + 6$ x States

The time T_{In} which a single instruction takes to be processed consists of a minimum number (T_{Imin}) plus an additional number (T_{Iadd}) of instruction state times and/or ALE Cycle Times, as follows:

$T_{In} = T_{Imin} + T_{Iadd}$

5.2.2 Minimum State Times

The following table 5.1 shows the minimum number of state times required to process a ST10x166 instruction fetched from the internal ROM (T_{Imin} (ROM)). The minimum number of state times for instructions fetched from the internal RAM (T_{Imin} (RAM)), or of ALE Cycle Times for instructions fetched from the external memory (T_{Imin} (ext)), can also be easily calculated by means of table 5.1.

Most of the ST10x166 instructions - except some of the branches, the multiplication, the division and a special move instruction - require a minimum of two state times. In the case of internal ROM program execution there is no execution time dependency on the instruction length except for some special branch situations. The injected target instruction of a cache jump instruction can be considered for timing evaluations as if being executed from the internal ROM, regardless of which memory range the rest of the current program is really fetched from.

For some of the branch instructions, table 5.1 represents both the standard number of state times which means that the corresponding branch is taken, and an additional T_{Imin} value in parentheses which refers to the case that either the branch condition is not met or that a cache jump is taken.

Instructions executed from the internal RAM require the same minimum time as if being fetched from the internal ROM plus an instruction-length dependent number of state times, as follows:

For 2-byte instructions:
T_{Imin}(RAM) = T_{Imin} (ROM) + 4 x States

For 4-byte instructions:
T_{Imin}(RAM) = T_{Imin} (ROM) + 6 x States

In contrast to the internal ROM program execution, the minimum time T_{Imin}(ext) to process an external instruction additionally depends on the instruction length. T_{Imin}(ext) is either 1 ALE Cycle Time for most of the 2-byte instructions, or 2 ALE Cycle Times for most of the 4-byte instructions. The following formula represents the minimum execution time of instructions fetched from an external memory via a 16-bit data bus:

For 2-byte instructions:
T_{Imin}(ext)=1xACT + (T_{Imin}(ROM) - 2) x States

For 4-byte instructions:
T_{Imin}(ext)=2xACTs + (T_{Imin}(ROM) - 2) x States

For instructions fetched from an external memory via an 8-bit data bus, the minimum number of required ALE Cycle Times is twice the number for a 16-bit bus.

Table 5-1. Minimum Instruction State Times

Instruction	T_{Imin} (ROM) [States]	T_{Imin} (ROM) (at 20MHz CPU Clock)	Unit
Any (except the following)	2	100	ns
CALLI, CALLA	4 (2)	200 (100)	ns
CALLS, CALLR, PCALL	4	200	ns
JB, JBC, JNB, JNBS	4 (2)	200 (100)	ns
JMPS	4	200	ns
JMPA, JMPI, JMPR	4 (2)	200 (100)	ns
MUL, MULU	10	500	ns
DIV, DIVL, DIVU, DIVLU	20	1000	ns
MOV[B] Rn, [Rm + #data 16]	4	200	ns
RET, RETI, RETP, RETS	4	200	ns
TRAP	4	200	ns

5.2.3 Additional State Times

As described in the following, some operand accesses can extend the execution time of an instruction, T_{In}. Since the additional time, T_{Iadd}, is mostly caused by internal instruction pipelining, it often will be possible to evade these timing effects in time-critical program modules by means of a suitable rearrangement of the corresponding instruction sequences. The ST10x166 simulator and emulator offer many facilities which support the user in optimizing the program whenever required.

1)Internal ROM operand reads: T_{Iadd} = 2x States

Both byte and word operand reads always require 2 additional state times.

2) Internal RAM operand reads via indirect addressing modes: T_{Iadd} = 0 or 1 x State

Reading a GPR or any other directly addressed operand within the internal RAM space does NOT cause additional state times. However, reading an indirectly addressed internal RAM operand will extend the processing time by 1 state time if the pre-

ceding instruction auto-increments or auto-decrements a GPR as shown in the following example:

I_n MOV R1 , [R0+]
; auto-increment R0

I_{n+1} MOV [R3], [R2]
; if R2 points into the internal RAM space:
; T_{Iadd} = 1 x State

In this case, the additional time can simply be avoided by putting another suitable instruction before the instruction I_{n-1} indirectly reading the internal RAM.

3)Internal SFR operand reads:
T_{Iadd} = 0, 1 x State or 2 x States

Mostly, SFR read accesses do NOT require additional processing time. In some rare cases, however, either one or two additional state times will be caused by particular SFR operations, as follows:

- **Reading an SFR immediately after an instruction which writes to the internal SFR space, as shown in the following example:**

I_n MOV T0, #1000h
; write to Timer 0

I_{n+1} ADD R3, T1
; read from Timer 1: T_{Iadd} = 1 x State

- **Reading the PSW register immediately after an instruction which implicitly updates the condition flags, as shown in the following example:**

I_n ADD R0, #1000h
; implicit modification of PSW flags

I_{n+1} BAND C, Z
; read from PSW: T_{Iadd} = 2 x States

- **Implicitly incrementing or decrementing the SP register immediately after an instruction which explicitly writes to the SP register, as shown in the following example:**

I_n MOV SP, #0FB00h
; explicit update of the stack pointer

I_{n+1} SCXT R1, #1000h
; implicit decrement of the stack pointer:
; T_{Iadd} = 2 x States

In these cases, the extra state times can be avoided by putting other suitable instructions before the instruction In+1 reading the SFR.

4) External operand reads: **T_{Iadd} = 1 x ACT**

Any external operand reading via a 16-bit data bus requires one additional ALE Cycle Time. Reading word operands via an 8-bit data bus takes twice as much time (2 ALE Cycle Times) as the reading of byte operands.

5) External operand writes:
T_{Iadd} = 0 x State ... 1 x ACT

Writing of an external operand via a 16-bit data bus takes one additional ALE Cycle Time. For timing calculations of external program parts, this extra time must always be considered. The value of T_{Iadd} which must be considered for timing evaluations of internal program parts, may fluctuate between 0 state times and 1 ALE Cycle Time. This is because external writes are normally performed in parallel to other CPU operations. Thus T_{Iadd} could already have been considered in the standard processing time of another instruction. Writing a word operand via an 8-bit data bus requires twice as much time (2 ALE Cycle Times) as the writing of a byte operand.

6)Testing Branch Conditions:
T_{Iadd} = 0 or 1 x States

Mostly, NO extra time is required for conditional branch instructions to decide whether a branch condition is met or not. However, an additional state time will be caused if the preceding instruction writes to the PSW register, as shown in the following example:

I_n BSET USR0
; write to PSW

I_{n+1} JMPR cc_Z, label
; test condition flag in PSW:
; T_{Iadd} = 1 x State

In this case, the extra state time can simply be intercepted by putting another suitable instruction before the conditional branch instruction.

7) Jumps into the internal ROM space:
T_{Iadd} = 0 or 2 x States

As already described, standard jumps into the internal ROM space require 4 state times to be executed. This minimum time will be extended by 2 additional state times, if the branch target instruction is a double word instruction at a non-aligned double word location (xxx2h, xxx6h, xxxAh, xxxEh), as shown in the following example:

label ....
; any non-aligned double word instruction
; (i.e. at location 0FFEh)

....

I_{n+1} JMPA cc_UC, label
; if a standard branch is taken:
; T_{Iadd} = 2 x States (T_{In} = 6 x States)

A cache jump, which normally requires just 2 state times, will be extended by 2 additional state times if both the cached jump target instruction and its

successor instruction are non-aligned double word instructions, as shown in the following example:

label ....
; any non-aligned double word instruction
; (i.e. at location 12FAh)

I_t+1 ....
; any non-aligned double word instruction
; (i.e. at location 12FEh)

I_{n+1} JMPR cc_UC, label
; provided that a cache jump is taken:
; T_{Iadd} = 2 x States (T_{In} = 4 x States)

If required, these extra state times can be avoided by allocating double word jump target instructions to aligned double word addresses (xxx0h, xxx4h, xxx8h, xxxCh).

5.3 CPU SPECIAL FUNCTION REGISTERS

The core CPU requires a set of Special Function Registers (SFRs) to maintain the system state information, to supply the ALU with register-addressable constants and to control system configuration, multiply and divide ALU operations, code memory segmentation, data memory paging, and accesses onto the General Purpose Registers and the System Stack.

The access mechanism for these SFRs in the CPU core is identical to the access mechanism for any other SFR. Since all SFRs can simply be controlled by means of any instruction which is capable of addressing the SFR memory space, a lot of flexibility has been gained, and the need to create a set of system specific instructions was avoided. Note, however, that there are user access restrictions for some of the CPU core SFRs to ensure proper processor operations

The PSW, SP, and MDC registers can be modified not only explicitly by the programmer, but also implicitly by the CPU during normal instruction processing. Note that any explicit programmer's write request to an SFR supersedes a simultaneous modification by hardware of the same register.

Note furthermore, that any byte write operation to an SFR clears the non-addresed complementary byte within the specified SFR. Note also that non-implemented (reserved) SFR bits can not be modified, and will always supply a read value of '0'.

SYSCON **(FF0Ch / 86h)**

System Configuration Register

Reset Values: 0000h, 0400h, 0440h, 0480h or 04C0h

15	14	13	12	11	10	9	8
R	STKSZ		RDYEN	SGTDIS	BUSACT	BYTDIS	CLKEN

7	6	5	4	3	2	1	0
BTYP		MTTC	RWDC	MCTC			

b15 =R: **Reserved.**

b14,b13 =STKSZ: **Maximum System Stack Size Selection of between 32 and 256 words.**

b12 =RDYEN: **$\overline{\text{READY}}$ Input Enable control bit:**
RDYEN = 0: $\overline{\text{READY}}$ disabled; pin can be used for normal I/O
RDYEN = 1: $\overline{\text{READY}}$ enabled; pin used for $\overline{\text{READY}}$ input

b11 =SGTDIS**: Segmentation Disable controle bit:**
SGTDIS = 0: A16 and A17 enabled; Port 4 used for segment address
SGTDIS = 1: A16 and A17 disabled; Port 4 can be used for normal I/O

b10 =BUSACT**: Bus Active Control Bit**

b9 =BYTDIS: **Byte High Enable ($\overline{\text{BHE}}$) pin control bit:**
BYTDIS = 0: $\overline{\text{BHE}}$ enabled
BYTDIS = 1: $\overline{\text{BHE}}$ disabled; pin can be used for normal I/O

b8 =CLKEN**: System Clock Output (CLKOUT) Enable bit :**
CLKEN = 0: CLKOUT disabled; pin can be used for normal I/O
CLKEN = 1: CLKOUT enabled; pin used for system clock output

b7,b6 =BTYP: **External Bus Configuration Control**

b5 =MTTC: **Memory Tri-state Time Control**

b4 =RWDC**: Read/Write Delay Control.**

b3,b2,b1,b0 =MCTC: **Memory Cycle TIme Control.**

5.3.1 SYSCON: System Configuration Register

This bit-addressable register provides general system configuration and control functions. There are five different reset values for the SYSCON register, because the BTYP bit field and the BUSACT bit are initialized during reset dependent on the state of the $\overline{\text{BUSACT}}$, EBC0 and EBC1 input pins.

5.3.1.1 INTERNAL ROM OR FLASH MEMORY/EXTERNAL MEMORY ACCESS MODE SELECTION

A two-bit field, BTYP, and BUSACT, reflect the selected external bus configuration, as shown in table 5.2.

BTYP bits and the BUSACT bit are always read- and writeable bits, regardless of the bus configuration selected during reset. But after the EINIT instruction (end of initialization), only the external bus configuration can be changed at any time. When the SYSCON parameters are modified during initialization, an instruction from a source (external bus or internal ROM) which is to be switched must not be performed. (e.g. disabling the external bus when executing from external memory)!

Switching between the bus modes can also be performed with the BUSCON1 register. (see section 5.3.1.5 for further information).

Note that the selection of a multiplexed external bus configuration automatically extends the Memory Tri-State Time by one state time (1 state time=2 x $1/f_{OSC}$).

For further information and for examples about the Single Chip Mode and the external bus configuration modes, see section 9.1.

5.3.1.2 EXTERNAL BUS TIMING CONTROL (VIA MCTC, MTTC, RWDC)

The MCTC bit field and the MTTC and RWDC bits in the SYSCON register are provided for varying external bus timing parameters as follows. The Memory Cycle Time can be extended within a range from 0 to 15 state times by means of the MCTC bit field (1 state time = 2 x $1/f_{OSC}$). By means of the MTTC bit, the Memory Tri-State time can be extended by either 1 or 0 additional state time. The Memory Tri-State Time is additionally extended by one state time whenever a multiplexed external bus configuration is selected. The RWDC bit allows programming a time delay of either 0 or 0.5 state times between the falling edges of the ALE and the Read/Write signals. This read/write delay does not extend the general memory access time. Note that additional external wait states do not slow down internal memory accesses. Table 5.3 summarizes the SYSCON control functions for the external bus timing.

After reset, the MCTC, MTTC and RWDC are all initialized to zero. Thus, even very slow memories will be accessed correctly.

5.3.1.3 BYTE HIGH ENABLE PIN CONTROL (VIA BYTDIS)

The BYTDIS bit is provided for controlling the active low Byte High Enable ($\overline{\text{BHE}}$) pin. The function of the $\overline{\text{BHE}}$ pin is enabled if the BYTDIS bit contains a ‘0’. Otherwise, it is disabled and the pin can be used as standard I/O pin. The $\overline{\text{BHE}}$ pin is implicitly used by the External Bus Controller to select one of two byte-organized memory chips which are connected with the ST10x166 via a word wide-external data bus. After reset, BYTDIS is initialized to zero.

For further information about the use of the $\overline{\text{BHE}}$ pin see chapter 10.

Table 5-2. External Bus Configuration via BUSACT, BTYP bit field

BUSACT	BTYP	Reset	During Init	After Init
0	**00**	**ROM enable Seg. 0 No ext. Bus**	**ROM enable Seg. 0**	**No Action**
0	**01**	**(Reserved)**	**ROM enable Seg. 1**	**No Action**
0	**10**	**(Reserved)**	**Disable ROM**	**No Action**
0	**11**	**(Reserved)**	**Disable ext. Bus**	**No Action**
1	**00**	**8-Bit Non-Mux no ROM**	**8-Bit Non-Mux**	**8-Bit Non-Mux**
1	**01**	**8-Bit Mux no ROM**	**8-Bit Mux**	**8-Bit Mux**
1	**10**	**16-Bit Mux no ROM**	**16-Bit Mux**	**16-Bit Mux**
1	**11**	**16-Bit Non-Mux no ROM**	**16-Bit Non-Mux**	**16-Bit Non-Mux**

Table 5-3. SYSCON External Bus Timing Control Functions

Control Parameter	Value	Number of Additional State Times	Affected Time
MCTC	**0000b**	**15**	**Memory Cycle Time**
	0001b	**14**	
	0010b	**13**	
	0011b	**12**	
	0100b	**11**	
	0101b	**10**	
	0110b	**9**	
	0111b	**8**	
	1000b	**7**	
	1001b	**6**	
	1010b	**5**	
	1011b	**4**	
	1100b	**3**	
	1101b	**2**	
	1110b	**1**	
	1111b	**0**	
MTTC	**0b**	**1**	**Memory Tri-State Time**
	1b	**0**	
RWDC	**0b**	**0**	**Read/Write Signal Delay**
	1b	**0**	
BTYP	**00b**	**0**	**Memory Tri-State Time**
	01b	**1 (implicit)**	**(implicit for multiplexed**
	10b	**1 (implicit)**	**bus configurations)**
	11b	**0**	

5.3.1.4 READY PIN CONTROL (VIA RDYEN)

The RDYEN bit provides an optional Data-Ready function via the active low $\overline{\text{READY}}$ input pin, to allow an external memory controller or peripherals to determine the duration of an external memory access. The Data-Ready function is enabled by setting the RDYEN bit to '1'. In this case, port pin P3.14 takes on its alternate function as active low $\overline{\text{READY}}$ input pin. An active low signal on the $\overline{\text{READY}}$ input pin signifies that data is available and must be latched by the on-chip External Bus Controller. Note, that it is the user's responsibility to set the direction of the $\overline{\text{READY}}$ pin to input before using this function.

When the Data-Ready function is enabled and bits 0 to 2 of SYSCON register are cleared, the external bus timing is only determined by the $\overline{\text{READY}}$ pin, the MTTC bit, the RWDC bit and by the selected external bus mode. If 1 to 7 wait states are programmed in bits 0 to 2 of the MCTC field, the CPU will first insert the selected number of wait states into the memory cycle (Cycle Time Wait States), regardless of the state of the $\overline{\text{READY}}$ line. Then after the wait state time has expired, the CPU will check the $\overline{\text{READY}}$ line and delay the memory access depending on the state of the $\overline{\text{READY}}$ line.

Warning**: If the Data-Ready function is enabled, the $\overline{\text{READY}}$ input pin must be activated for every external memory access. Otherwise, the system would be halted until a reset occurs. No time-out protection other than a Watchdog Timer overflow is provided for that case.**

In order to allow one to interface to a variety of peripherals, support for both asynchronous and synchronous modes of operation is provided. If the Data-Ready function is enabled, bit 3 in the SYSCON register (the MSB of the MCTC bit field) determines whether the $\overline{\text{READY}}$ input pin is to be used in asynchronous or synchronous mode:

SYSCON.3 = 1:Asynchronous $\overline{\text{READY}}$ input
SYSCON.3 = 0:Synchronous $\overline{\text{READY}}$ input

In the asynchronous mode of operation, the $\overline{READY}$ input signal is internally synchronized to the microcontroller's operation. In this case, an additional delay of up to two state times may be required in order to internally synchronize the signal.

In the synchronous mode of operation, it is the user's responsibility to ensure that the $\overline{READY}$ input signal meets the specified setup and hold times. In order to obtain the necessary timing information and to perform external synchronization, the Clock Output function can be used.

After reset, the Data-Ready function is disabled.

5.3.1.5 CLOCK OUTPUT PIN CONTROL (VIA CLKEN)

The Clock Output function is enabled by setting the CLKEN bit of the SYSCON register to '1'. If enabled, port pin P3.15 takes on its alternate function as CLKOUT output pin. The Clock Output is a 50% duty cycle clock whose frequency is half the oscillator frequency ($f_{OUT} = f_{OSC}/2$). For a 40MHz clock oscillator, the CLKOUT frequency is 20MHz.

Note that it is the user's responsibility to set the direction of the CLKOUT pin to output and to write a '1' into port latch P3.15 before using this function.

After reset, the Clock Output function is disabled.

5.3.1.6 NON-SEGMENTED MEMORY MODE SELECTION (VIA SGTDIS)

The SGTDIS bit allows selecting either the segmented or non-segmented memory mode. In the case of the non-segmented memory mode (SGTDIS = '1'), the entire address space is restricted to 64 Kbytes (segment 0), and thus all addresses can be represented by 16-bits. Thus, the contents of the CSP register are totally ignored, and only the two least significant bits of the DPP registers are used for physical address generation. This means also that the pins of Port 4 can be used as standard I/O pins.

In the case of the segmented memory mode (SGTDIS = '0'), the CSP and DPP registers are used for the generation of physical 18-bit addresses as described in sections 5.3.6 and 5.3.7. The pins of Port 4 are used as address pins A17 and A16 provided that an external bus has been configured.

Whenever the segmented memory mode is selected, the CSP register is pushed onto the system stack in addition to the IP register before an interrupt service routine is entered, and it is repopped when the interrupt service routine is left again.

After reset, the segmented memory mode is selected by default.

5.3.1.7 MAXIMUM SYSTEM STACK SIZE SELECTION (VIA STKSZ)

The maximum size of the system stack is directly determined by the two-bit field STKSZ as shown in table below.

Table 5-4. Maximum System Stack Size

STKSZ	Maximum System Stack Size
00b	**256 words**
01b	**128 words**
10b	**64 words**
11b	**32 words**

Note that the contents of the STKSZ bit field immediately affect the physical stack address generation via the SP register described in section 5.3.9.

After reset, the maximum stack size of 256 word locations is selected by default.

Figure 5-4. Partitioning Example with BUSCON1 and SYSCON

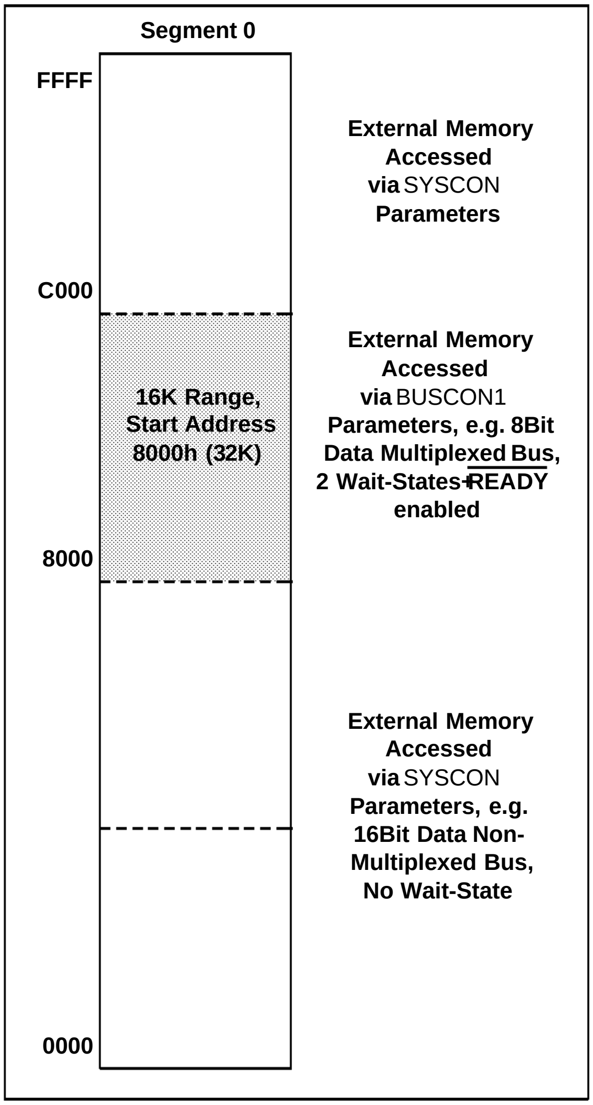
Segment 0
FFFF
C000
8000
0000
External Memory Accessed via SYSCON Parameters
16K Range, Start Address 8000h (32K)
External Memory Accessed via BUSCON1 Parameters, e.g. 8Bit Data Multiplexed Bus, 2 Wait-States+READY enabled
External Memory Accessed via SYSCON Parameters, e.g. 16Bit Data Non-Multiplexed Bus, No Wait-State

BUSCON1 **(FF14h / 8Ah)**

Bus Configuration Register

Reset Value:0000h

15	14	13	12	11	10	9	8
R			RDYEN1	R	BUSACT1	ALECTL1	R

7	6	5	4	3	2	1	0
BTYP		MTTC1	RWDC1	MCTC			

b15,b14,b13,b11,b8 =R: **Reserved.**

b12 =RDYEN1**:** **$\overline{\text{READY}}$ Input Enable control bit:**
RDYEN = 0: $\overline{\text{READY}}$ function disabled for BUSCON1 accesses
RDYEN = 1: $\overline{\text{READY}}$ function enabled for BUSCON1 accesses

b10 =BUSACT1**: Bus Active Control Bit.**

b9 =ALECTL1: **ALE Lengthening Control Bit**

b7,b6 =BTYP: **External Bus Configuration Control**

b5 =MTTC1: **Memory Tri-state Time Control**

b4 =RWDC1**: Read/Write Delay Control.**

b3 to b0 =MCTC: **Memory Cycle TIme Control.**

ADDRSEL1 **(FE18h / 0Ch)**

Address Select Register

Reset Value:0000h

15	14	13	12	11	10	9	8
R						RGSAD[6..5]	

7	6	5	4	3	2	1	0
RGSAD[4..0]					RGSZ		

b15 to b10 =R: **Reserved.**

b9,b3 =RGSAD**: BUSCON1 Address Range Start Address Selection.**

b2,b1,b0 =RGSZ**: BUSCON1 Address Range Selection.**

5.3.2 BUSCON1: Bus Configuration Register

This register used with the ADDRSEL1 register allows the automatic selection of a different bus configuration. It includes all control bits of the SYSCON register relevant for configuring.

There are three different methods to lengthen an access to external memories or peripherals. One is using MCTC to lengthen the middle of a bus cycle, another is using MTTC to lengthen the end of a bus cycle, and the third is the ALECTL1 (ALE Control Bit) of BUSCON1 to lengthen the beginning of a bus cycle.

After reset, the ALECTL1 bit is reset. For peripheral components requiring a longer ALE pulse, longer address setup, and hold times, the ALECTL1 bit must be set to "1". Then any access within the address range specified by the ADDRSEL1 register is lengthened by one machine state (50ns @ 20MHz CPU clock). The ALE signal is lengthened by one TCL (TCL=1/2 machine state), and the address hold time after ALE is also lengthened by one TCL.

After reset, all bits of the BUSCON1 register are cleared. As opposed to SYSCON register, the state of the external bus control pins EBC0, EBC1 and $\overline{\text{BUSACT}}$ are not copied into BUSCON1 after reset.

To enable the BUSCON1 register, an address range plus a start address must be specified through ADDRSEL1 register, then BUSCON1 register must be programmed to the desired bus configuration and the BUSACT1 control bit must be set. The BUSCON1 register will then take control of the external bus when an access to the specified address range is performed, otherwise the SYSCON parameters control the external bus characteristics.

Figure 5.4 shows an example of control of partitions of the external address range by SYSCON and BUSCON1.

Warning: **The BUSCON1 register controls only the external bus. It's not possible to control the on-chip ROM or FLASH space through the BUSCON1 register. This can only be done with SYSCON register.**

5.3.3 ADDRSEL1: ADDRESS SELECT REGISTER

This register specifies the address space in which the BUSCON1 register will control the external bus configuration.

This register is divided into three parts. Bits 0 to 2, RGSZ (Range Size Selection bit field), specify the address range according to the following table 5.5:

The next bit field, bits 3 to 9, Range Start Address specified the start address of the address range. The third field of register ADDRSEL1, bits 10 to 15, is reserved for future expansion.

There is a fixed relationship between the range size and the range start address. The range start address can only be specified on boundaries determined by the selected range size. That is, for a range size of 16Kbyte, the start address of this range can only be programmed to 16Kbyte boundaries. For a range size of 2Kbyte, the start address can be programmed to any 2Kbyte address boundary. If the range size is 128Kbyte, then for the ST10x166 the start address can only be 0Kbyte or 128Kbyte, since the total address range is 256 Kbyte (two blocks of 128 Kbyte). Bits 3 to 9, the Address Start Location bit field of register ADDRSEL1, can be ragarded as the most significant address bits of the selected address range. Thus, depending on the selected range size, only a part of this bit field is relevant for specification of the start address. This is shown in the following table (x = don't care; R = relevant bit):

Table 5-5. Address Range Selection

Range Size RGSZ	Selected Address Range	Relevant Bits of Range Start Address
000	**2 KByte**	**RRRRRRR**
001	**16 KByte**	**RRRRxxx**
010	**32 KByte**	**RRRxxxx**
011	**64 KByte**	**RRxxxxx**
100	**128 KByte**	**Rxxxxxx**
101	**reserved**	**–**
110	**reserved**	**–**
111	**reserved**	**–**

5.3.4 PSW: Processor Status Word

This bit-addressable register reflects the current state of the microcontroller. It is subdivided into two parts of which the first one contains bits which represent the current ALU status, and the second bits which determine the current CPU interrupt status. A separate bit (USR0) within the PSW register is provided for use as general purpose flag.

5.3.4.1 ALU STATUS (N, C, V, Z, E, MULIP)

The condition flags of the PSW (N, C, V, Z, E) indicate the ALU status due to the last recently performed ALU operation. They are set by most of the instructions due to specific rules which depend on the ALU or data movement operation performed by an instruction.

After execution of an instruction which explicitly updates the PSW register, the condition flags can not be interpreted as described in the following because any explicit write to the PSW register supersedes the condition flag values which are implicitly generated by the CPU. Explicitly reading the PSW register supplies a read value which represents the state of the PSW register after execution of the immediately preceding instruction.

- E-Flag: **The E-flag can be altered by instructions which perform ALU or data movement operations. The E-flag is cleared by those instructions which can not be reasonably used for table search operations. In all other cases, the E-flag is set depending on the value of the source operand to signify whether the end of a search table is reached or not. If the value of the source operand of an instruction equals the lowest negative number which is representable by the data format of the corresponding instruction('8000h' for the word data type, or '80h' for the byte data type) the E-Flag is set to '1', otherwise it is cleared.**
- Z-Flag: **The Z-Flag is normally set to '1' if the result of an ALU operation equals zero, otherwise it is cleared.**

  For the addition and subtraction with carry, the Z-flag is only set to '1' if the Z-flag already contains a '1', and if the result of the current ALU operation additionally equals zero. This mechanism is provided for the support of multiple precision calculations. For Boolean bit operations with only one operand, the Z-flag represents the logical negation of the previous state of the specified bit.

PSW **(FF10h/88h)**

Processor Status Word Register

Reset Value :0000h

15	14	13	12	11	10	9	8
ILVL				IEN	HLDEN	R	

7	6	5	4	3	2	1	0
R	USR0	MULIP	E	Z	V	C	N

b15,b14,b13,b12 =ILVL: **This field represents the current interrupt level being serviced by the CPU. Upon entry into an interrupt routine, the four bits of the priority level of the acknowledged interrupt are copied into this field. By modifying this field, the priority level of the current CPU task can be programmed.**

b11 = IEN: **This bit globally enables or disables acceptance of interrupts.**
IEN = 0: CPU Interrupts disabled.
IEN = 1: CPU Interrupts enabled.

b10 = HLDEN: **Bus Arbitration Enable Bit**
HLDEN = 0:HOLD/HLDA/BREQ disabled.
HLDEN = 1:HOLD/HLDA/BREQ enabled.
Pin P2.13-P2.15 are used for these functions

,b9,b8,b7 =R: **Reserved.**

b6 = USR0: **This bit is provided as the user's general purpose flag.**

b5 = MULIP: **This bit specifies that a multiply divide operation was interrupted before completion.**
MULIP = 0: No multiply/divide operation in progress.
MULIP = 1: Multiply/divide operation in progress.

b4 = E: **This bit supports table search operation by signifying the end of a table.**

b3 = Z: **This bit represents a zero result from the ALU.**

b2 = V: **This bit represents an overflow result from the ALU.**

b1 = C: **This bit represents a carry result from the ALU.**

b0 = N: **This bit represents a negative result from the ALU.**

For Boolean bit operations with two operands, the Z-flag represents the logical NORing of the two specified bits. For the prioritize ALU operation, the Z-flag allows a differentiation of the two cases which cause a result of zero.

- V-Flag: For the addition, subtraction and 2's complementation, the V-flag is always set to '1' if the result overflows the maximum range of signed numbers which are representable by either 16 bits for word operations ('-8000h' to '+7FFFh'), or by 8-bits for byte operations ('-80h' to '+7Fh'), otherwise the V-flag is cleared. Note that the result of an integer addition, integer subtraction, or 2's complement is not valid if the V-flag signifies an arithmetic overflow.
  For the multiplication and division, the V-flag is set to '1' if the result can not be represented in a word data type, otherwise it is cleared. Note that a division by zero will always cause an overflow. In contrast to the result of a division, the result of a multiplication is valid regardless of whether the V-flag is set to '1' or not.

  Since logical ALU operations can not produce an invalid result, the V-flag is cleared by these operations.

  The V-flag is also used as 'Sticky Bit' for rotate right and shift right operations. With only using the C-flag, a rounding error caused by a shift right operation can be estimated up to a quantity of one half of the LSB of the result. In conjunction with the V-flag, the C-flag allows evaluating the rounding error with a finer resolution, as shown in table below.

  For Boolean bit operations with only one operand, the V-flag is always cleared. For Boolean bit operations with two operands, the V-flag represents the logical ORing of the two specified bits.

- C-Flag: After an addition, the C-flag indicates that a carry from the most significant bit of the specified word or byte data type has been generated.

  After a subtraction or a comparison, the C-flag indicates a borrow which represents the logical negation of a carry for the addition. This means that the C-flag is set to '1' if no carry from the most significant bit of the specified word or byte data type has been generated during a subtraction which is performed internally by the ALU as a 2's complement addition, and the C-flag is cleared when this complement addition caused a carry.

  The C-flag is always cleared for logical, multiply and divide ALU operations, because these operations can not cause a carry anyhow.

  For the shift and rotate operations, the C-flag represents the value of the bit shifted out last. If a shift count of zero is specified, the C-flag will be cleared. The C-flag is also cleared for a prioritize ALU operation because a '1' is never shifted out of the MSB during the normalization of an operand.

  For Boolean bit operations with only one operand, the C-flag is always cleared. For Boolean bit operations with two operands, the C-flag represents the logical ANDing of the two specified bits.

Table 5-6. Shift Right Rounding Error Evaluation

C-Flag	V-Flag	Rounding Error Quantity
0	**0**	**No Rounding Error**
0	**1**	**0 < Rounding Error < 1/2 LSB**
1	**0**	**Rounding Error = 1/2 LSB**
1	**1**	**Rounding Error < 1/2 LSB**

- N-Flag: **For most of the ALU operations, the N-flag is set to '1' if the most significant bit of the result contains a '1', otherwise it is cleared. In the case of integer operations, the N-flag can be interpreted as the sign bit of the result (negative: N=1, positive: N=0). Negative numbers are always represented as the 2's complement of the corresponding positive number. The range of signed numbers extends from '-8000h' to '+7FFFh' for the word data type, or from '-80h' to '+7Fh' for the byte data type.**

  For Boolean bit operations with only one operand, the N-flag represents the previous state of the specified bit. For Boolean bit operations with two operands, the N-flag represents the logical XORing of the two specified bits.

- MULIP-Flag: **The MULIP flag will be set to '1' by hardware upon the entrance into an interrupt service routine when a multiply or divide ALU operation was interrupted before completion. Depending on the state of the MULIP bit, the hardware decides whether a multiplication or division must be continued or not at the end of an interrupt service. The MULIP bit is overwritten with the contents of the stacked MULIP-flag when the return-from-interrupt-instruction (RETI) is executed. This normally means that the MULIP-flag is cleared again after that.**

  After reset, all of the ALU status bits are cleared.

5.3.4.2 CPU INTERRUPT STATUS (IEN, ILVL)

The Interrupt Enable bit allows to globally enable (IEN = '1') or disable (IEN = '0') interrupts. The four-bit Interrupt Level field (ILVL) specifies the priority of the current CPU activity. The interrupt level is updated by hardware upon the entry into an interrupt service routine, but it can also be modified by software to prevent other interrupts from being acknowledged. In the case that an interrupt level '15' has been assigned to the CPU, it has the highest possible priority, and thus the current CPU operation can not be interrupted except by hardware traps or external non-maskable interrupts. For details about the ST10x166 interrupt system see chapter 7.

After reset, all interrupts are globally disabled, and the lowest priority (ILVL=0) is assigned to the initital CPU activity.

5.3.4.3 HOLD/HLDA/BREQ BUS ARBITRATION

The HLDEN bit allows to enable the alternate functions at pins P2.15 ($\overline{\text{HOLD}}$), P2.14 ($\overline{\text{HLDA}}$), and P2.13 (BREQ). If HLDEN bit is cleared after once being set, this will disable the bus arbitration function of this pins, but WILL NOT turn them back to I/O or CAPCOM mode. This feature is interesting in case of execution of critical real time routines which must not be interrupted or delayed by external HOLD requests.

5.3.5 IP: Instruction Pointer

This register determines the 16-bit intra-segment address of the instruction which is currently fetched within the code segment selected by the CSP register. The IP register is not mapped into the ST10x166's address space, and thus it can not be directly accessed by the programmer. The IP can, however, be modified indirectly via the stack by means of a return instruction.

The IP register is implicitly updated by the CPU for branch instructions and after instruction fetch operations.

5.3.6 CSP: Code Segment Pointer

This non-bit addressable register selects the code segment being used at run-time to access instructions. Currently, only two bits of the CSP register are implemented while bits 2 to 15 are reserved for future use. The CSP register allows accessing the entire memory space in currently four segments of 64 Kbytes each.

Code memory addresses are generated by directly extending the 16-bit contents of the IP register by the contents of the CSP register.

In the case of the segmented memory mode, bit 1 and bit 0 of the CSP register are output on the segment address pins A17 and A16 of Port 4 for all external code accesses. For the non-segmented memory mode or the Single Chip Mode, the contents of this register are not significant, because all code acccesses are automatically restricted to segment 0.

Note that the CSP register can only be read but not written for data operations. It is, however, modified either directly by means of the JMPS and CALLS instructions, or indirectly via the stack by means of the RETS and RETI instructions. Upon the acceptance of an interrupt or the execution of a software TRAP instruction, the CSP register is automatically set to zero. After reset, the CSP register is initialized to '0000h'.

CSP **(FF08h/04h)**

Code Segment Pointer Register

Reset Value: 0000h

15	14	13	12	11	10	9	8
R							

7	6	5	4	3	2	1	0
R						SEGNR	

b15 to b2 =R: **Reserved.**

b1,b0 =SEGNR: **Code Segment Pointer Register**
Specifies the code segment number where the current instruction is to be tetched. Will be ignored in the case of segmentation being disabled.

Figure 5-5. Addressing via the Code Segment Pointer

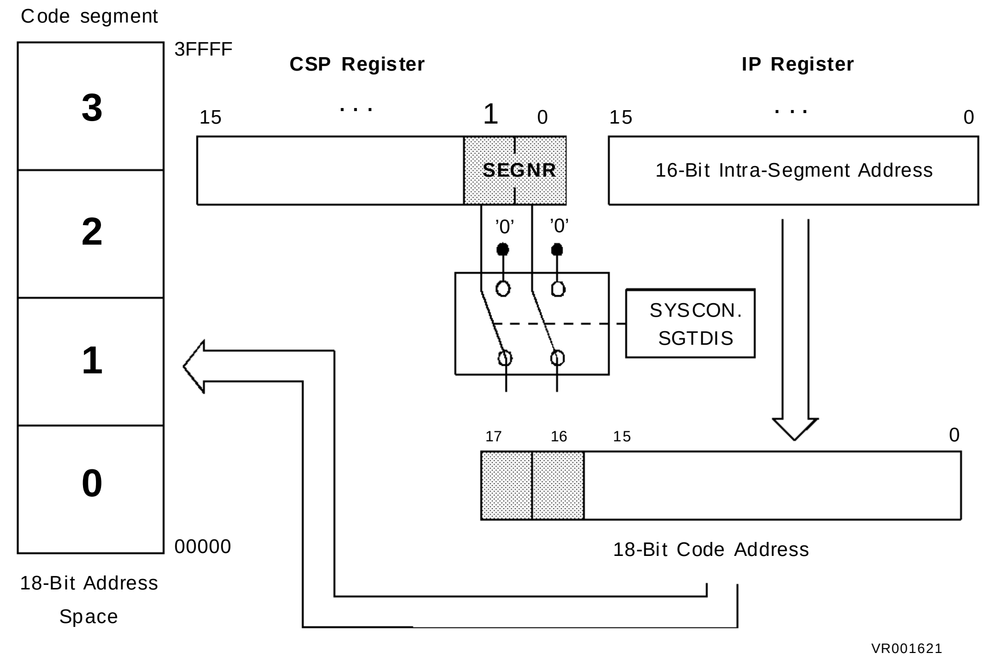

5.3.7 DPP0, DPP1, DPP2, DPP3: Data Page Pointers

These four non-bit addressable registers select up to four different data pages being active at run-time. Currently, only the four least significant bits of each DPP register are implemented while the bits 4 to 15 are reserved for future use. The DPP registers allow accessing the entire memory space in currently 16 pages of 16 Kbytes each.

The DPP registers are implicitly used whenever data accesses to any memory space are made via indirect or direct long 16-bit addressing modes (except for PEC data transfers). After reset, the Data Page Pointers are initialized in a way that all indirect or direct long 16-bit addresses result in identical 18-bit addresses. This allows accessing data pages 0 to 3 in segment 0 as shown in figure 5.6. If the user does not want to use any data paging, no further action is required.

Data paging is performed by extending the lower 14 bits of indirect or direct long 16-bit addresses by the contents of a DDP register as shown in figure 5.7. The two MSBs of the 16-bit address are interpreted as the number of the DPP register which is to be used for the address extension. The contents of the selected DPP register specify one of currently sixteen possible data pages. This 4-bit data page number in addition to the remaining 14-bit page offset address forms the physical 18-bit address.

In the case of the non-segmented memory mode, only the two least significant bits of the implicitly selected DPP register are used for the physical address generation just described. Thus, extreme care should be taken when changing a DPP register contents if a non-segmented memory model is selected, because otherwise unexpected results could occur.

In the case of the segmented memory mode, bits 3 and 2 of the implicitly selected DPP register are output on the segment address pins A17 and A16 of Port 4 for all external data accesses.

A DPP register can be updated via any instruction which is capable of modifying an SFR. Due to the internal instruction pipeline, a new DPP value is not yet usable for the operand address calculation of the instruction immediately following the instruction updating the DPP register.

DPP0 **(FE00h / 00h)**

Data Page Pointer Registers

Reset Value : 0000h

15	14	13	12	11	10	9	8
R	R	R	R	R	R	R	R

7	6	5	4	3	2	1	0
R	R	R	R	DPP0PN			

DPP1 **(FE02h / 01h)**

Data Page Pointer Registers

Reset Value 0001h

15	14	13	12	11	10	9	8
R	R	R	R	R	R	R	R

7	6	5	4	3	2	1	0
R	R	R	R	DPP1PN			

DPP2 **(FE04h / 02h)**

Data Page Pointer Register

Reset Value : 0002h

15	14	13	12	11	10	9	8
R	R	R	R	R	R	R	R

7	6	5	4	3	2	1	0
R	R	R	R	DPP2PN			

DPP3 **(FE06h / 03h)**

Data Page Pointer Register

Reset Value : 0003h

15	14	13	12	11	10	9	8
R	R	R	R	R	R	R	R

7	6	5	4	3	2	1	0
R	R	R	R	DPP3PN			

b15 to b4 =R: **Reserved.**

b3 to b0 =DPPxPN (x=0 to 3): **Data Page Pointer Specified the data page number selected by DPPx. In the case that segmentation is disabled, only the two least significant bits of DPPxPN are significant!**

Figure 5-6. Default Configuration of the Data PagePointers

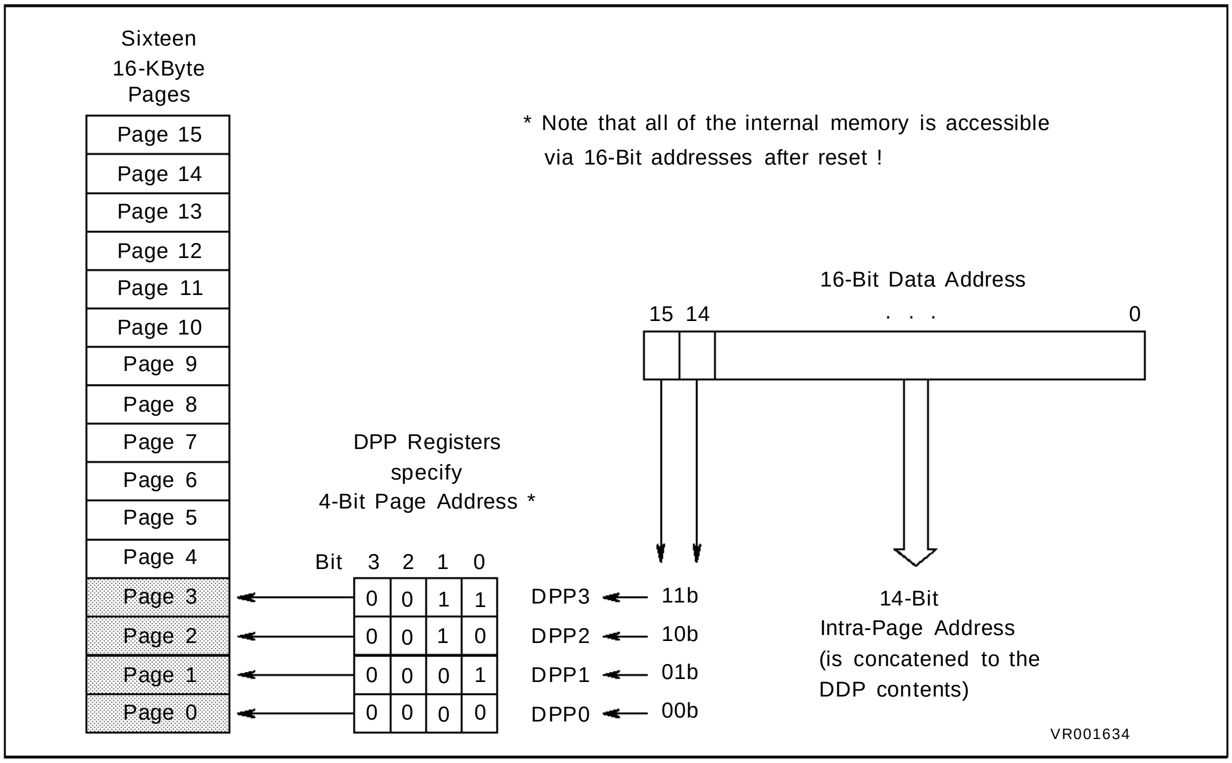
Sixteen
16-KByte
Pages
Page 15
Page 14
Page 13
Page 12
Page 11
Page 10
Page 9
Page 8
Page 7
Page 6
Page 5
Page 4
Page 3
Page 2
Page 1
Page 0
* Note that all of the internal memory is accessible
via 16-Bit addresses after reset !
16-Bit Data Address
15 14 . . . 0
DPP Registers
specify
4-Bit Page Address *
Bit 3 2 1 0
0 0 1 1
0 0 1 0
0 0 0 1
0 0 0 0
DPP3 ← 11b
DPP2 ← 10b
DPP1 ← 01b
DPP0 ← 00b
14-Bit
Intra-Page Address
(is concatened to the
DDP contents)
VR001634

Figure 5-7. Addressing via the Data Page Pointers

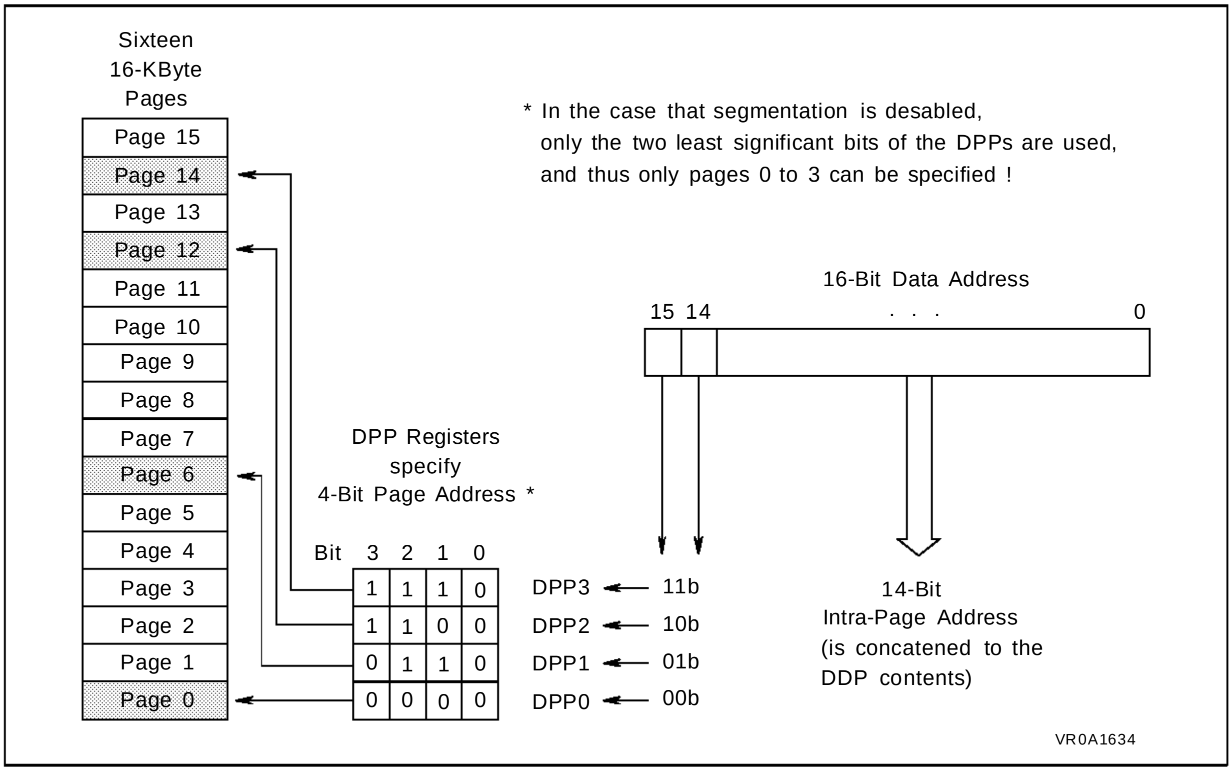
Sixteen
16-KByte
Pages
Page 15
Page 14
Page 13
Page 12
Page 11
Page 10
Page 9
Page 8
Page 7
Page 6
Page 5
Page 4
Page 3
Page 2
Page 1
Page 0
* In the case that segmentation is desabled,
only the two least significant bits of the DPPs are used,
and thus only pages 0 to 3 can be specified !
16-Bit Data Address
15 14 . . . 0
DPP Registers
specify
4-Bit Page Address *
Bit 3 2 1 0
1 1 1 0
1 1 0 0
0 1 1 0
0 0 0 0
DPP3 ← 11b
DPP2 ← 10b
DPP1 ← 01b
DPP0 ← 00b
14-Bit
Intra-Page Address
(is concatened to the
DDP contents)
VR0A1634

5.3.8 CP: Context Pointer

This non-bit addressable register is used to select the current register context. This means that the CP register value determines the address of the first GPR within a register bank of up to 16 word-wide and/or bytewide GPRs.

Since the least significant bit of the CP register is tied to '0' and bit 10 is tied to the negated state of bit 9 and bits 11 to 15 are tied to '1' by hardware, the CP register can only point to even word addresses from 0FA00h to 0DFFEh. Note however, that it is the user's responsibility that the physical GPR address specified via the CP register in addition with the short GPR address must always be an internal RAM location. If this condition is not met, unexpected results may occur.

After reset, the CP register is initialized to 'FC00h'.

Figure 5.10 shows how the CP register is used to select a register bank. The CP register can be updated via any instruction which is capable of modifying an SFR. Due to the internal instruction pipeline, a new CP value is not yet usable for GPR address calculations of the instruction immediately following the instruction updating the CP register.

CP **(FE10h / 08h)**

Context Pointer Register

Reset Value : FC00h

15	14	13	12	11	10	9	8
1	1	1	1	1	CP		

7	6	5	4	3	2	1	0
CP (continuation)							0

b15 to b11 =1: **Bits tied to '1' by hardware. This allows possible contents from 'FA00h' to 'FDFEh'. Note, however, that valid GPR addresses must be situated within the internal RAM space.**

b10 to b1 =CP: **Context Pointer Register. Modifiable portion of the CP register. Note that bit 10 is always forced to the inverse state of bit 9 by hardware. For software, bit 10 can only be read but not directly be written.**

b0 =0:
Bit tied to '0' by hardware, since only even CP contents are allowed.

The Switch Context (SCXT) instruction allows saving the contents of the CP register on the stack and updating the CP with a new value in just one machine cycle. The organization of the GPRs within the internal RAM is described in the chapter 3 For detailed information about the different addressing modes mentioned in the following, see chapter 6

The CP register is implicitly used for address calculations by different addressing modes, as follows.

5.3.8.1 IMPLICIT CP USE WITH SHORT 4-BIT GPR ADDRESSES

When a short 4-bit GPR address (mnemonic: Rw or Rb) is used, the four bits specify an address relative to the memory location specified by the contents of the CP register.

Depending on whether a relative word (Rw) or byte (Rb) GPR address is specified, the short 4-bit GPR address is multiplied either by two or by one before it is added to the contents of the CP register as shown in figure 5.8. Thus, both byte and word GPR accesses are possible in this way.

GPRs used as indirect address pointers are always accessed wordwise. For some instructions only the first four GPRs can be used as indirect address pointers. These GPRs are specified via short 2-bit GPR addresses. The respective physical address calculation is identical to that for the short 4-bit GPR addresses.

5.3.8.2 IMPLICIT CP USE WITH SHORT 8-BIT REGISTER ADDRESSES

When a short 8-bit address (mnemonic: reg or bitoff) is used, and supposed that the respective value is within a range from F0h to FFh, the four least significant bits are interpreted as short 4-bit GPR address while the four most significant bits are ignored. As shown in figure 5.9, the respective physical GPR address calculation is identical to that for the short 4-bit GPR addresses. For single bit accesses on a GPR, the GPR's word address is calculated as just described, but the position of the bit within the word is specified by a separate additional 4-bit value.

Figure 5-8. Implicit CP Use by Short 4-Bit GPR addressing Modes

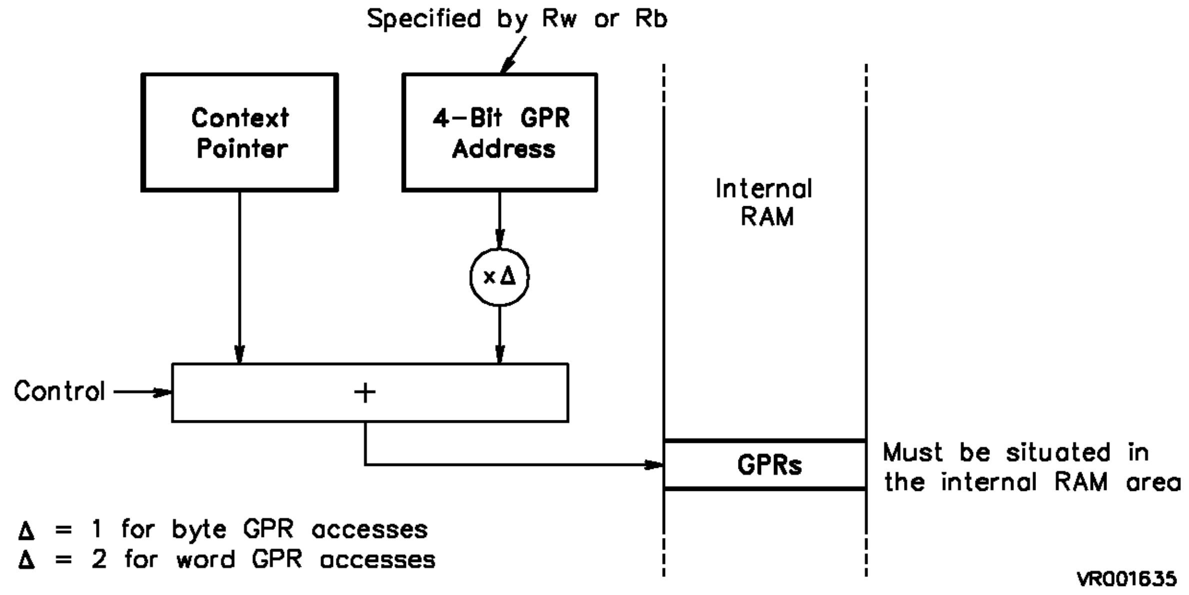
Specified by Rw or Rb
Context Pointer
4-Bit GPR Address
Internal RAM
x Δ
Control
+
GPRs
Must be situated in the internal RAM area
Δ = 1 for byte GPR accesses
Δ = 2 for word GPR accesses
VR001635

Figure 5-9. Implicit CP Use by Short 8-Bit Addressing

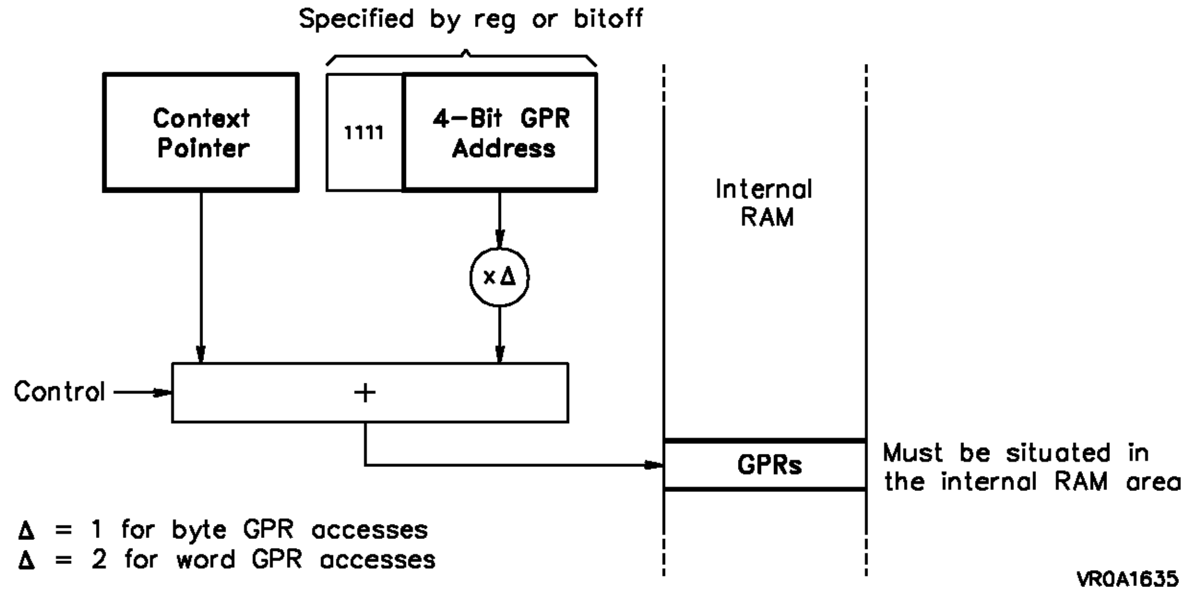
Specified by reg or bitoff
Context Pointer
1111
4-Bit GPR Address
Internal RAM
x Δ
Control
+
GPRs
Must be situated in the internal RAM area
Δ = 1 for byte GPR accesses
Δ = 2 for word GPR accesses
VR0A1635

Figure 5-10. Register Bank Selection via the CP register

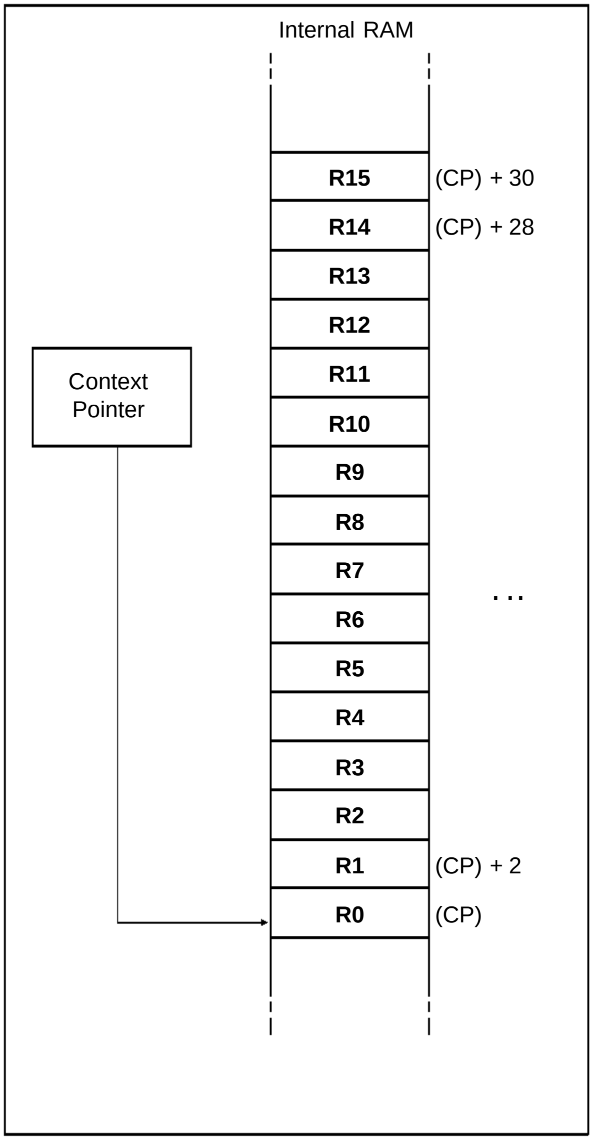

5.3.9 SP: Stack Pointer

This non-bit addressable register is used to point to the top of the internal system stack (TOS). The SP register is pre-decremented whenever data is to be pushed onto the stack, and it is post-incremented whenever data is to be popped from the stack. Thus, the system stack grows from higher toward lower memory locations.

Since the least significant bit of the SP register is tied to '0' and bits 11 to 15 are tied to '1' by hardware, the SP register can only point to even word addresses from 0F800h to 0FFFEh. After reset, the SP register is initialized to 'FC00h'.

The SP register can be updated via any instruction which is capable of modifying an SFR. Based on the internal instruction pipeline, a POP or RETURN instruction must not immediatly follow an instruction updating the SP register.

The maximum system stack size is programmable via the STKSZ bit field in the SYSCON register. The address space which can be addressed via the SP register (addresses from 0F800h to 0FFFEh) can be regarded as virtual stack range while the physical system stack range is forced by the hardware to be situated within the internal RAM with its upper boundary at address 0FBFEh and with its lower boundary at the memory location which is specified by the selected maximum stack size shown in table 5.7. Depending on the selected maximum stack size, different numbers of significant SP bits are used for the physical address calculation while the remaining bits are masked off.

After reset, the SP register is initialized in a way that the system stack can be accessed as usual as long as the dynamic stack boundaries do not exceed the selected maximum stack size. This means that the (virtual) SP contents are directly mapped onto identical physical system stack addresses.

The virtual stack address space is subdivided in portions whose size is identical to the maximum size of the selected physical stack space. All of these virtual stack portions are mapped onto the available physical stack area by means of an address calculation shown in the following. A number of significant bits of the inverted SP contents is subtracted from the upper stack base address, 0FBFEh. An AND mask being changed depending on the STKSZ bit field determines which of the bits are significant.

Physical Stack Address =

FBFEh - (~ (SP) ^ 1FEh)
for 256 words stack size

FBFEh - (~ (SP) ^ FEh)
for 128 words stack size

FBFEh - (~ (SP) ^ 7Eh)
for 64 words stack size

FBFEh - (~ (SP) ^ 3Eh)
for 32 words stack size

The following example demonstrates the circular stack mechanism which is also an effect of this virtual stack mapping First, register R1 is pushed onto the lowest physical stack location according to the selected maximum stack size. With the following instruction, register R2 will be pushed onto the highest physical stack location although the SP is decremented by 2 as for the previous push operation.

```
        ; Assumed stack size is 64
        ; Assumed SP content is
...     ; (SP) =FC82h
        ; Physical stack address=FB82h
PUSH R1; (SP) =FC80h
        ; Physical stack address=FB80h
PUSH R2; (SP) =FC7Eh
        ; Physical stack address=FBFEh
```

Upon each stack access, the SP register is compared against two stack boundary registers. This may cause a stack overflow or stack underflow hardware trap to occur. For more details about the use of this feature see the description of the STKOV and STKUN stack boundary registers.

SP **(FE 12h / 09h)**

Stack Pointer Register

Reset Value : FC00h

15	14	13	12	11	10	9	8
1	1	1	1	1	sp		

7	6	5	4	3	2	1	0
sp (continuation)							0

b15 to b11 =1:
Bits tied to ’1’ by hardware. This allows possible contents from ’F800h’ through ’FFFEh’. Note however, that the physical system stack is forced to internal RAM addresses by hardware, as shown in table 5.7.

b10 to b1 =sp: **Stack Pointer Register.**
Modifiable portion of the SP register.

b0 = 0:
Bit tied to ’0’ by hardware, because only even SP contents are allowed.

Table 5-7. Selectable Physical System Stack Ranges

SYSCON. (STKSZ)	Physical Stack Spaces	Size (words)	Significant SP Bits
00b	**FA00h - FBFFh**	**256**	**0 through 8**
01b	**FB00h - FBFFh**	**128**	**0 through 7**
10b	**FB80h - FBFFh**	**64**	**0 through 6**
11b	**FBC0h - FBFFh**	**32**	**0 through 5**

5.3.10 STKUN: Stack Underflow Pointer

This non-bit addressable register is compared against the SP register after each data pop operation from the system stack (i.e. for POP and RETURN instructions) and after each addition to the SP register. If the contents of the SP register are greater than the contents of the STKUN register, a stack overflow hardware trap will occur.

Stack Underflow Condition: (SP) > (STKUN)

Since the least significant bit of the STKUN register is tied to '0' and bits 11 to 15 are tied to '1' by hardware, the STKUN register can only point to even word addresses from 0F800h through 0FFFEh. After reset, the STKUN register is initialized to 'FC00h'.

A stack underflow trap can be used for an automatic filling of the system stack, for example, when an external user stack is used as a storage extension of the internal system stack. For more details about the implementation of a stack underflow trap service routine see chapter 13.

5.3.11 STKOV: Stack Overflow Pointer

This non-bit addressable register is compared against the SP register after each operation which pushes data onto the system stack (e.g.: PUSH and CALL instructions or interrupts) and after each subtraction from the SP register. If the contents of the SP register are less than the the contents of the STKOV register, a stack overflow hardware trap will occur.

Stack Overflow Condition:(SP) < (STKOV)

Since the least significant bit of the STKOV register is tied to '0' and bits 11 to 15 are tied to '1' by hardware, the STKOV register can only point to even word addresses from 0F800h to 0FFFEh. After reset, the STKOV register is initialized to 'FA00h'. The default initialization allows treating a stack overflow as a fatal error in the corresponding trap service routine. Note, however, that data in the bottom of the stack may have been overwritten by the status information stacked upon servicing the stack overflow trap.

The stack overflow trap could also be used for automatic system stack flushing when the system stack is used as a 'Stack Cache' for an external user stack. In this case, the STKOV register should be initialized to a value which represents the desired lowest Top of Stack address plus 12 according to the selected maximum stack size. This considers the worst case that will occur when a stack overflow condition is detected just during entry into an interrupt service routine. Then, six additional stack word locations are required for pushing the IP, PSW, and CSP registers for both the interrupt service and the hardware trap service. For more details about the implementation of a stack overflow trap service routine see chapter 13.

STKUN **(FE16h / 0Bh)**

Stack Underflow Pointer Register

Reset Value : FC00h

15	14	13	12	11	10	9	8
1	1	1	1	1	STKUN		

7	6	5	4	3	2	1	0
STKUN (continuation)							0

b15 to b11 =1 :

Bits tied to '1' by hardware. This restricts contents to values from 'F800h' to 'FFFEh'.

b10 to b1 =STKUN: **Stack Underflow Pointer Register.**

Modifiable portion of the STKUN register.

b0 =0:

Bit tied to '0' by hardware because only even STKUN contents are compared against the SP register.

STKOV **(FE14h / 0Ah)**

Stack Overflow Pointer Register

Reset Value : FA00h

15	14	13	12	11	10	9	8
1	1	1	1	1	STKOV		

7	6	5	4	3	2	1	0
STKOV (continuation)							0

b15 to b11 =1:

Bits tied to '1' by hardware. This restricts contents to values from F800h to FFFEh.

b10 to b1 =STKOV: **Stack Overflow Pointer Register.**

Modifiable portion of the STKOV register.

b0 =0:

Bit tied to '0' by hardware because only even STKOV contents are compared against the SP register.

5.3.12 MDH: Multiply/Divide Register High Portion

This register is implicitly used by the CPU when it performs a multiplication or a division. After a multiplication, this non- bit addressable register represents the high order 16 bits of the 32-bit result. For long divisions, the MDH register must be loaded with the high order 16 bits of the 32-bit dividend before the division is started. After any division, the MDH register represents the 16-bit remainder.

Whenever this register is updated via software, the Multiply/Divide Register In Use (MDRIU) flag in the Multiply/Divide Control register (MDC) is set to '1'.

When a multiplication or division is interrupted before its completion and when a new multiply or divide operation is to be performed in the interrupt service routine, the MDH register must be saved along with the MDL and MDC registers to avoid erroneous results.

After reset, this register is initialized to '0000h'.

A detailed description of how to use the MDH register for programming multiply and divide algorithms can be found in section 13.2.

MDH **(FE0Ch / 06h)**

Multiply Divide Register High Portion

Reset Value : 0000h

15	14	13	12	11	10	9	8
MDH							
7	**6**	**5**	**4**	**3**	**2**	**1**	**0**
MDH (continuation)							

b15 to b0 = MDH: **Multiply Divide Register High Portion**
Specifies the high order 16 bits of the 32-bit Multiply and Divide Register (MD).

5.3.13 MDL: Multiply/Divide Register Low Portion

This register is implicitly used by the CPU when it performs a multiplication or a division. After a multiplication, this non-bit addressable register represents the low order 16 bits of the 32-bit result. For long divisions, MDL must be loaded with the low order 16 bits of the 32-bit dividend before the division is started. After any division, the MDL register represents the 16-bit quotient.

Whenever this register is updated via software, the Multiply/Divide Register In Use (MDRIU) flag in the Multiply/Divide Control register (MDC) is set to '1'. The MDRIU flag is cleared whenever the MDL register is read via software. When a multiplication or division is interrupted before its completion, and when a new multiply or divide operation is to be performed in the interrupt service routine, the MDL register must be saved along with the MDH and MDC registers to avoid erroneous results.

After reset, this register is initialized to '0000h'.

A detailed description of how to use the MDL register for programming multiply and divide algorithms can be found in section 13.2.

MDL (FE0Eh / 07h)

Multiply Divide Register Low Portion

Reset Value : 0000h

15	14	13	12	11	10	9	8
MDL							
7	**6**	**5**	**4**	**3**	**2**	**1**	**0**
MDL (continuation)							

b15 to b0 = MDL: **Multiply Divide Register Low Portion**
Specifies the low order 16 bits of the 32-bit Multiply and Divide Register (MD).

5.3.14 MDC: Multiply/Divide Control Register

This bit addressable 16-bit register is implicitly used by the CPU when it performs a multiplication or a division. It is used to store the required control information for the corresponding multiply or divide operation. The MDC register is updated by hardware during each single cycle of a multiply or divide instruction.

When a division or multiplication was interrupted before its completion, the MDC register must first be saved along with the MDH and MDL registers (to be able to restart the interrupted operation later), and then it must be cleared to be prepared for the new calculation. After completion of the new division or multiplication, the state of the interrupted multiply or divide operation must be restored.

The MDRIU flag is the only portion of the MDC register which might be of interest for the user. The remaining portions of the MDC register are reserved for a dedicated use by the hardware, and thus they should never be modified by the user other than as described in the preceding paragraph. Otherwise, a correct continuation of an interrupted multiply or divide operation can not be guaranteed.

After reset, this register is initialized to '0000h'.

A detailed description of how to use the MDC register for programming multiply and divide algorithms can be found in section 13.2..

5.3.15 ONES: Constant Ones Register

All bits of this bit-addressable register are tied to '1' by hardware. This register is read-only The ONES register can be used as a register-addressable constant of all ones, i.e., for bit manipulation or mask generation. It can be accessed via any instruction which is capable of addressing an SFR.

5.3.16 ZEROS: Constant Zeros Register

All bits of this bit- addressable register are tied to '0' by hardware. This register is read-only. The ZEROS register can be used as a register- addressable constant of all zeros, i.e., for bit manipulation or mask generation. It can be accessed via any instruction which is capable of addressing an SFR.

MDC **(FE0Eh / 87h)**

Multiply/Divide Control Register

Reset Value : 0000h

<table>
<tr><th>15</th><th>14</th><th>13</th><th>12</th><th>11</th><th>10</th><th>9</th><th>8</th></tr>
<tr><td colspan="8">R</td></tr>
</table>

7	6	5	4	3	2	1	0
!	!	!	MDRIU	!	!	!	!

b15 to b8 = R: **Reserved.**

b7 to b5 - b3 to b0 = !:

These bit portions are used by the machine for controlling multiply and divide operations internally. Thus, they should never be modified by the user except after having saved the previous MDC contents or by restoring the MDC register.

b4 = MDRIU: **MD Register In Use Flag.**

Is set to '1' when the MDL or MDH register is written by software, or when a divide or multiply instruction is executed. This MD-Register-in-Use-Flag is cleared when the MDL register is read by software.

ONES **(FE1Eh / 8Fh)**

Constant Ones Register

Reset Value : FFFFh

15	14	13	12	11	10	9	8
1	1	1	1	1	1	1	1

7	6	5	4	3	2	1	0
1	1	1	1	1	1	1	1

b15 to b0 = 1:

All of the bits are tired to '1' by hardware. The entire ONES register is read-only

ZEROS **(FF1Ch / 8Eh)**

Constant Zeros Register

Reset Value : 0000h

15	14	13	12	11	10	9	8
0	0	0	0	0	0	0	0

7	6	5	4	3	2	1	0
0	0	0	0	0	0	0	0

b15 to b0 = 0:

All of the bits are tired to '0' by hardware. The entire ZEROS register is read-only.

CHAPTER 6

INSTRUCTION SET OVERVIEW

6. INSTRUCTION SET OVERVIEW

This chapter describes the ST10x166's instruction set. In the first section, a short overview of all available instructions ordered by instruction classes is given. The second section describes which the addressing modes available for each class. Section 6.3 contains a description of the condition codes available for conditional branch instructions.

A detailed description of each instruction, including its operand data type, condition flag settings, addressing modes, length (number of bytes) and object code format can be found in appendix A.

6.1 SUMMARY OF INSTRUCTION CLASSES

This section contains a summary of the ST10x166's instruction set subdivided in instruction classes. Mnemonic instruction names refer to the corresponding description in appendix A where one can gain more detailed information.

6.1.1 Arithmetic Instructions

- **Addition of two words or bytes:**

  ADD ADDB
- **Addition with Carry of two words or bytes:**

  ADDC ADDCB
- **Subtraction of two words or bytes:**

  SUB SUBB
- **Subtraction with Carry of two words or bytes:**

  SUBC SUBCB
- **16x16 bit signed or unsigned multiplication:**

  MUL MULU
- **16/16 bit signed or unsigned division:**

  DIV DIVU
- **32/16 bit signed or unsigned division:**

  DIVL DIVLU
- **1's complement of a word or byte:**

  CPL CPLB
- **2's complement (negation) of a word or byte:**

  NEG NEGB

6.1.2 Logical Instructions

- **Bitwise ANDing of two words or bytes:**

  AND ANDB
- **Bitwise ORing of two words or bytes:**

  OR ORB
- **Bitwise XORing of two words or bytes:**

  XOR XORB

6.1.3 Boolean Bit Manipulation Instructions

- **Manipulation of a maskable bit field in either the high or the low byte of a word:**

  BFLDH BFLDL
- **Setting of a bit:**

  BSET
- **Clearing of a bit:**

  BCLR
- **Movement of a bit:**

  BMOV
- **Movement of a negated bit:**

  BMOVN
- **ANDing of two bits:**

  BAND
- **ORing of two bits:**

  BOR
- **XORing of two bits:**

  BXOR
- **Comparison of two bits:**

  BCMP

6.1.4 Compare and Loop Control Instructions

- **Comparison of two words or bytes:**

  CMP CMPB
- **Comparison of two words with post-increment by either 1 or 2:**

  CMPI1 CMPI2
- **Comparison of two words with post-decrement by either 1 or 2:**

  CMPD1 CMPD2

6.1.5 Shift and Rotate Instructions

- **Shifting right of a word:**

  SHR
- **Shifting left of a word:**

  SHL
- **Rotating right of a word:**

  ROR
- **Rotating left of a word:**

  ROL
- **Arithmetic shifting right of a word (sign bit shifting):**

  ASHR

6.1.6 Prioritize Instruction

- **Determination of the number of shift cycles required to normalize a word operand (floating point support):**

  PRIOR

6.1.7 Data Movement Instructions

- **Standard data movement of a word or byte:**

  MOV MOVB
- **Data movement of a byte to a word location with either sign or zero byte extension:**

  MOVBS MOVBZ

6.1.8 System Stack Instructions

- **Pushing of a word onto the system stack:**

  PUSH
- **Popping of a word from the system stack:**

  POP
- **Saving of a word on the system stack, and then updating the old word with a new value (provided for register bank switching):**

  SCXT

6.1.9 Jump and Call Instructions

- **Conditional jumping to an either absolutely, indirectly, or relatively addressed target instruction within the current code segment:**

  JMPA JMPI JMPR
- **Unconditional jumping to an absolutely addressed target instruction within any code segment:**

  JMPS
- **Conditional jumping to a relatively addressed target instruction within the current code segment depending on the state of a selectable bit:**

  JB JNB
- **Conditional jumping to a relatively addressed target instruction within the current code segment depending on the state of a selectable bit with a post-inversion of the tested bit in case of jump taken (semaphore support):**

  JBC JNBS
- **Conditional calling of an either absolutly or indirectly addressed subroutine within the current code segment:**

  CALLA CALLI
- **Unconditional calling of a relatively addressed subroutine within the current code segment:**

  CALLR
- **Unconditional calling of an absolutely addressed subroutine within any code segment:**

  CALLS
- **Unconditional calling of an absolutely addressed subroutine within the current code segment plus an additional pushing of a selectable register onto the system stack:**

  PCALL
- **Unconditional branching to the interrupt or trap vector jump table in code segment 0:**

  TRAP

6.1.10 Return Instruction

- **Returning from a subroutine within the current code segment:**

  RET
- **Returning from a subroutine within any code segment:**

  RETS
- **Returning from a subroutine within the current code segment plus an additional popping of a selectable register from the system stack:**

  RETP
- **Returning from an interrupt service routine:**

  RETI

6.1.11 System Control Instructions

- **Resetting the ST10x166 by software:**

  SRST
- **Entering the Idle mode:**

  IDLE
- **Entering the Power Down mode:**

  PWRDN
- **Servicing the Watchdog Timer:**

  SRVWDT
- **Disabling the Watchdog Timer:**

  DISWDT
- **Signifying the end of the initialization routine (pulls RSTOUT pin high, and disables the effect of any later execution of a DISWDT instruction):**

  EINIT

6.1.12 Miscellaneous

- **Null operation which requires 2 bytes of storage and the minimum time for execution:**

  NOP

6.1.13 Software Instruction Set

BSO/Tasking provides software development tools for the ST10 including a C Compiler package with the Assembler a166. This accepts all assembly language instruction mnemonics that have been described before, and adds a software instruction set which is an extension of the previous hardware instruction set.

The BSO/Tasking software instruction set recognises all instructions of the hardware instruction set and some additional mnemonics. These additional mnemonics are added to allow easy and comfortable programming. The assembler will determine by means of the combination of operands, which opcode is entered in the instruction format. This means that based on the combination of operands the appropriate hardware mnemonic is chosen. Please refer to the BSO/Tasking Documentation for further information.

6.2 ADDRESSING MODES

The ST10x166 provides many powerful addressing modes for access on word, byte and bit data, or to specify the target address of a branch instruction. The addressing modes are subdivided in different categories as follows.

6.2.1 Constants

The ST10x166 instruction set supports the use of wordwide or bytewide immediate constants. For an optimum utilization of the available code storage, these constants are represented in the instruction formats by either 3, 4, 8 or 16 bits. Thus, short constants are always zero-extended while long constants are truncated if necessary to match the data format required for the particular operation:

Immediate constants are always signified by a leading number sign '#'.

Table 6-1. Data Type Adaptation of Immediate Constants

Mnemonic	Word Operation	Byte Operation
#data3	**0000h + data3**	**00h + data3**
#date4	**0000h + data4**	**00h + data4**
#data16	**data16**	**data 16 ∧ 0FFh**
#data8	**0000h + data8**	**data8**
#mask	**0000h + mask**	**mask**

6.2.2 Short Addressing Modes

All of these addressing modes use an implicit base offset address to specify a physical 18-bit address. By these addressing modes, data can be specified within the GPR, SFR or bit-addressable memory space:

Physical Add. = Base Add.+ Δ x Short Add.

In the following, the short addressing modes which are shown in table 6.2 are described in more detail:

Rw, Rb: Specifies direct access to any GPR in the currently active context (register bank). Both 'Rw' and 'Rb' require four bits in the instruction format. The base address is determined by the contents of the CP register. 'Rw' specifies a 4 bit word GPR address relative to the base address (CP), while 'Rb' specifies a 4 bit byte GPR address relative to the base address (CP).

reg: Specifies direct access to any SFR or GPR in the currently active context (register bank). 'reg' requires eight bits in the instruction format. Short 'reg' addresses from 00h to EFh always specify SFRs. In that case, the base address is 0FE00h and the factor "Δ" equates 2. Depending on the opcode of an instruction, either the total word (for word operations) or the low byte (for byte operations) of an SFR can be addressed via 'reg'.

reg: (cont'd) Note that the high byte of an SFR can not be accessed via the 'reg' addressing mode. Short 'reg' addresses from F0h to FFh always specify GPRs. In that case, only the lower four bits of 'reg' are significant for physical address generation, and thus it can be regarded as being identical to the address generation described for the 'Rb' and 'Rw' addressing modes.

bitoff: Specifies direct access to any word in the bit-addressable memory space. 'bit off' requires eight bits in the instruction format. Depending on the specified 'bitoff' range, different base addresses are used to generate physical addresses: Short 'bitoff' addresses from 00h to 7Fh use 0FD00h as a base address, and thus they specify the 128 highest internal RAM word locations (0FD00h to 0FDFEh). Short 'bitoff' addresses from 80h to EFh use 0FF00h as a base address, and thus they specify the highest internal SFR word locations (0FF00h to 0FFDEh). Short 'bitoff' addresses from 80h to EFh use 0FF00h as a base address, and thus they specify the highest internal SFR word locations (0FF00h to 0FFDEh). For short 'bitoff' addresses from F0h to FFh, only the lowest four bits and the contents of the CP register are used to generate the physical address of the selected word GPR.

Table 6-2. Short Addressing Modes

Nmemonic	Physical Address	Short Address Range	Allows Access On
Rw	(CP) + 2xRw	Rw = 0...15	GPRs (Word)
Rb	(CP) + 1xRb	Rb = 0...15	GPRs (Byte)
reg	0FE00h + 2xreg (CP) + 2x(reg ∧ 0Fh) (CP) + 1x(reg ∧ 0Fh)	reg = 00h...EFh reg = F0h...FFh reg = F0h...FFh	SFRs (Word. Low Byte) GPRs (Word) GPRs (Byte)
bitoff	0FD00h + 2xbitoff 0FF00h + 2xbitoff ∧ 0FFh (CP) + 2x(bitoff ∧ 0Fh)	bitoff = 00h...7Fh bitoff = 80h...EFh bitoff = F0h...FFh	RAM Bit Word Offset SFR Bit Word Offset GPR Bit Word Offset
bitaddr	Word offset see bitoff; Immediate Bit Position	bitoff = 00h...FFh bitpos = 0...15	Any Single Bit

bitaddr: Any bit address is specified by a word address within the bit-addressable memory space (see ‘bitoff’), and by a bit position (‘bitpos’) within that word. Thus, ‘bitaddr’ requires twelve bits in the instruction format.

6.2.3 Long Addressing Mode

This addressing mode uses one of the four DPP registers to specify a physical 18-bit address. Any word or byte data within the entire memory space can be accessed in such a manner. Word accesses may not be performed on odd byte addresses. Otherwise, a hardware trap would occur. After reset, the DPP registers are initialized in a way that all long addresses are directly mapped onto the identical physical addresses.

Any long 16-bit address consists of two portions which are interpreted in different ways. Bits 0 to 13 specify a 14-bit data page offset address while bits 14 to 15 specify that of the four Data Page Pointer registers which is to be used to generate the physical 18-bit address as described below:

At present, the ST10x166 supports 256 Kbytes of address space, and thus only the lowest four bits of the selected DPP register contents are added to the 14-bit data page offset address. In case of segmentation being disabled, all data accesses are restricted on segment 0, and thus only the lowest two bits of the selected DPP register are significant at all. For more details about data paging see section 5.3.7.
The long addressing mode is represented by the mnemonic ‘mem’. Table 6.3 shows the association between long 16-bit addresses and the corresponding Data Page Pointer registers.

Table 6-3. Long Addressing Mode

Mnemonic	Physical Address	Long Address Range	Allows Access On
mem	**(DPP0) + mem ∧ 3FFFh**	**0000...3FFFh**	**Any Byte or Word**
	(DPP1) + mem ∧ 3FFFh	**4000...7FFFh**	**Any Byte or Word**
	(DPP2) + mem ∧ 3FFFh	**8000...BFFFh**	**Any Byte or Word**
	(DPP3) + mem ∧ 3FFFh	**C000...FFFFh**	**Any Byte or Word**

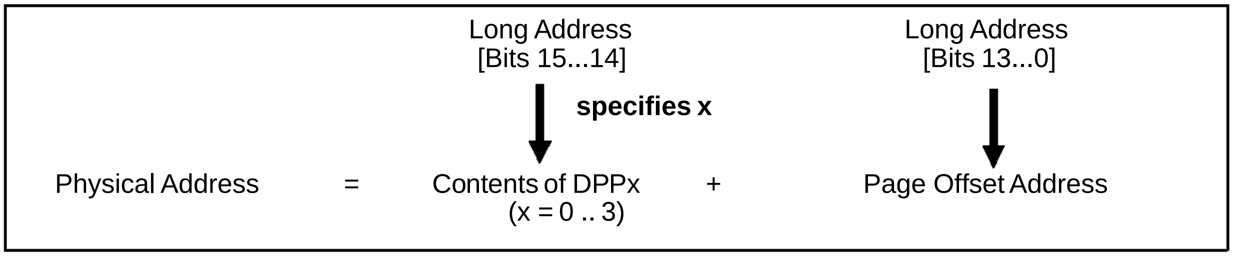

6.2.4 Indirect Addressing Modes

These addressing modes can be regarded as a mixture of short and long addressing modes. This means that long 16-bit addresses are specified indirectly by the contents of a word GPR which is specified directly by a short 4-bit address ('Rw'=0 to 15). Note that for some instructions only the lowest four word GPRs (R0 to R3) can be used as indirect address pointers which are specified via short 2-bit address in that case. There are indirect addressing modes where the GPR contents are modified by a constant addition before the long 16-bit address is calculated. Moreover, there are addressing modes which allow decrementing or incrementing the indirect address pointers by a data type-dependent value.

In each case, one of the four DPP registers is used to specify physical 18-bit addresses. Any word or byte data within the entire memory space can be addressed indirectly. Word accesses may not be performed on odd byte addresses. Otherwise, a hardware trap would occur. After reset, the DPP registers are initialized in a way that all indirectly generated long addresses are directly mapped onto the identical physical addresses.

The following algorithm describes how physical addresses are generated via indirect address pointers:

1) **Determination of the physical address of the word GPR which is used as indirect address pointer. This address is calculated via the register bank base address specified by the CP register contents plus two times the specified short address ('Rw').**

   GPR Address = (CP) + 2 x Short Address

2) **In case of pre-decrement (signified by a leading minus sign '-'), the indirect address pointer is decremented by a data-type-dependent value (Δ = 1 for byte operations, Δ = 2 for word operations) before the long 16-bit address is generated:**

   (GPR Address) = (GPR Address) - Δ
   ; optional step !

3) **Then, the long 16-bit address is determined by the contents of the indirect address pointer (plus a selectable constant value in some cases):**

   Long Address = (GPR Address) + Constant

4) **Afterwards, the physical 18-bit address is determined via the resulting long address and the corresponding DPP register contents as already described for the long 'mem' addressing modes. For more details about data paging, see section 5.3.7.**

5) **In case of Post-Increment (signified by a subsequent plus sign '+'), the indirect address pointer value is additionally incremented by a data-type-dependent value (Δ = 1 for byte operations, Δ =2 for word operations):**

   (GPR Address) = (GPR Address) + Δ
   ; optional step

The table below gives an overview of the particular indirect addressing modes of the ST10x166.

Table 6-4. Indirect Addressing Modes

Mnemonic	Particularity
[Rw]	**Normally, any word GPR can be used as indirect address pointer. For some instructions, however, only the first tour word GPRs can be used as indirect address pointers.**
[Rw +]	**The specified indirect address pointer is automatically post-incremented by either 1 (for byte data operations) or 2 (for word data operations).**
[-Rw]	**The specified indirect address pointer is automatically predecremented by either 1 (for byte data operations) or 2 (for word data operations).**
[Rw + #data 16]	**A 16-bit constant and the contents of the indirect address pointer are added before the long 16-bit address is calculated.**

6.2.5 Branch Target Addressing Modes

Different addressing modes are provided to specify the target address and segment of jump or call instructions. Relative, absolute and indirect modes can be used to update the Instruction Pointer (IP) register while the Code Segment Pointer (CSP) register can be updated only with an absolute value. A special mode is provided to address the interrupt and trap jump vector table which is allocated to the lowest portion of code segment 0.

In the following, the branch target addressing modes are described in more detail:

Table 6-5. Branch Target Addressing Modes

Mnemonic	Target Address		Target Segment		Valid Address Range	
caddr	(IP) = caddr		_		caddr	= 0...FFFEh
rel	(I)=(IP)	+ 2xrel	_		rel	= 00h...7Fh
	(IP)=(IP)	+ 2x(rel + 1)	_		rel	= 80h...FFh
[Rw]	(IP)=((CP)	+ 2xRw)	_		Rw	= 0...15
seg	-		(CSP) =	seg	seg	= 0...3
#trap7	(IP)=0000h	+ 4xtrap7	(CSP) =	0000h	trap7	= 0...7Fh

caddr: Specifies an absolute 16-bit code address within the current segment. Branches MAY NOT be taken to odd code addresses. Therefore, the least significant bit of 'caddr' must always contain a '0', otherwise a hardware trap will occur.

rel: This mnemonic represents an 8-bit signed word offset address relative to the current Instruction Pointer contents which represent the address of the instruction after the branch instruction. Depending on the offset address range, either forward ('rel' = 00h to 7F) or backward ('rel' = 80h to FFh) branches are possible. According to an either word- or doubleword sized branch instruction, a 'rel' value of '-1' (FFh) or '-2' (FEh) leads to a repeated execution of the branch instruction itself.

seg: Specifies an absolute code segment number. Currently, the ST10x166 supports four different code segments, and thus only the two least significant bits of the 'seg' operand value are used for updating the CSP register.

[Rw]: In this case, the 16-bit branch target instruction address is determined indirectly by the contents of a word GPR. In contrast to indirect data addresses, indirectly specified code addresses are NOT calculated via additional pointer registers (e.g. DPP registers). Note that branches MAY NOT be taken to odd code addresses. Therefore, the least significant bit of the address pointer GPR must always contain a '0', otherwise a hardware trap would occur.

# trap7: Specifies a particular interrupt or trap number for branching to the corresponding interrupt or trap service routine via a jump vector table. According to the maximum number of interrupt sources which are provided for the future, only trap numbers from 00h to 7Fh can be specified. Any double word code location in the address range from 00000h to 001FCh in code segment 0 can be accessed by the 'trap' addressing mode. The association between trap numbers and the corresponding interrupt or trap sources is specified in table 7.1.

6.3 CONDITION CODE SPECIFICATION

16 possible condition codes can be used to determine whether a conditional branch shall be taken or not. Table 6.6 gives an overview of which mnemonic abbreviations are available for that. It also describes which kinds of tests are performed due to the selected condition code, and it shows the association between the condition codes and their internal representation by a four-bit number.

Table 6-6. Condition Codes

Condition Code Mnemonics	Test	Description	CC Number
cc_UC	**$1 = 1$**	**Unconditional**	**0h**
cc_Z	**$Z = 1$**	**Zero**	**2h**
cc_NZ	**$Z = 0$**	**Not zero**	**3h**
cc_V	**$V = 1$**	**Overflow**	**4h**
cc_NV	**$V = 0$**	**No overflow**	**5h**
cc_N	**$N = 1$**	**Negative**	**6h**
cc_NN	**$N = 0$**	**Not negative**	**7h**
cc_C	**$C = 1$**	**Carry**	**8h**
cc_NC	**$C = 0$**	**No carry**	**9h**
cc_EQ	**$Z = 1$**	**Equal**	**2h**
cc_NE	**$Z = 0$**	**Not equal**	**3h**
cc_ULT	**$C = 1$**	**Unsigned less than**	**8h**
cc_ULE	**$(Z \vee C) = 1$**	**Unsigned less than or equal**	**Fh**
cc_UGE	**$C = 0$**	**Unsigned greater than or equal**	**9h**
cc_UGT	**$(Z \vee C) = 0$**	**Unsigned greater than**	**Eh**
cc_SLT	**$(N \oplus V) = 1$**	**Signed less than**	**Ch**
cc_SLE	**$(Z \vee (N \oplus V)) = 1$**	**Signed less than or equal**	**Bh**
cc_SGE	**$(N \oplus V) = 0$**	**Signed greater than or equal**	**Dh**
cc_SGT	**$(Z \vee (N \oplus V)) = 0$**	**Signed greater than**	**Ah**
cc_NET	**$(Z \vee E) = 0$**	**Not equal AND not end of table**	**1h**

SGS-THOMSON
MICROELECTRONICS

CHAPTER 7

INTERRUPT AND TRAP FUNCTIONS

7. INTERRUPT AND TRAP FUNCTIONS

The architecture of the ST10x166 supports several mechanisms for fast and flexible response to service requests that can be generated from various sources internal or external to the microcontroller. These mechanisms include:

- Normal Interrupt Processing

The CPU temporarily suspends the current program execution and branches to an interrupt service routine in order to service an interrupt requesting device. The current program status (IP, PSW, in segmentation mode also: CSP) is saved on the internal system stack. A prioritization scheme with 16 priority levels allows the user to specify the order in which multiple interrupt requests are to be handled.

- Interrupt Processing via the Peripheral Event Controller (PEC):

As a faster alternative to normal software oriented interrupt processing, any interrupt requesting source can also be serviced by the ST10x166's integrated Peripheral Event Controller. Upon an interrupt request, the PEC has the capability of performing a single word or byte data transfer between any two memory locations in segment 0 (data pages 0 through 3) through one of eight programmable PEC Service Channels. During a PEC transfer, the normal program execution of the CPU is halted for 1 instruction cycle. No internal program status information needs to be saved. For PEC service, the same prioritization scheme is applied which is used for normal interrupt processing. PEC transfers share the 2 highest priority levels.

- Trap Functions:

In response to the execution of certain instructions, trap functions are activated. A trap can also be caused externally by the Non-Maskable Interrupt pin $\overline{\text{NMI}}$. Several hardware trap functions are provided for handling erroneous conditions and exceptions that arise during the execution of an instruction. Hardware traps always have highest priority and cause immediate system reaction. The software trap function is invoked by the TRAP instruction which generates a software interrupt for a specified interrupt vector. For all types of traps, the current program status is saved on the system stack.

Warning: When program code is installed in the Flash memory (ST10F166) and located in segment 0, the CPU can receive an interrupt, but will not be able to service it during a writing operation on the Flash memory. This condition can be avoided with the Flash memory located in segment 1 and the program code in segment 0 (external memory).

7.1 INTERRUPT SYSTEM STRUCTURE

In order to support modular and consistent software design techniques, each source of an interrupt or PEC request is supplied with a separate interrupt control register and interrupt vector. The control register contains the interrupt request flag, the interrupt enable bit, and the interrupt priority of the associated source. Each source request is activated by one specific event, depending on the selected operating mode of the respective device. The only exceptions are the two serial channels of the ST10x166, where an error interrupt request can be generated by a parity, framing, or overrun error. However, specific status flags which identify the type of error are implemented in the serial channels control registers (see section 8.4 for details).

The ST10x166 provides a vectored interrupt system. In this system, certain vector locations in the memory space are reserved for the reset, trap, and interrupt service functions. Whenever a request occurs, the CPU branches to one of these locations which is predetermined by hardware. This allows direct identification of the source that caused the request. The only exceptions are the class B hardware traps, which all share the same vector address. The status flags in the Trap Flag Register TFR can then be used to determine the type of the trap (see section 7.2 for more details). For the special software TRAP instruction, the vector address is specified by the operand field of the instruction, which is a seven bit trap number.

The reserved vector locations of the ST10x166's memory space form a jump table. Here, one can place the appropriate jump instructions to the memory locations where the interrupt or trap service routines will actually start. The entries to the jump table are located at the lowest addresses in code segment zero of the memory space. Jump table entries have a distance of 4 bytes between consecutive entries, except for the reset vector and the hardware trap vectors where the distance is 8 or 16bytes.

The following table contains all sources that are capable of requesting interrupt or PEC service in the ST10x166, including the associated interrupt vectors and trap numbers. Also listed are the mnemonics of the affected Interrupt Request flags and their coresponding Interrupt Enable flags. The mnemonics are composed of a part that specifies the respective source, followed by a part that specifies their function (IR=Interrupt Request flag, IE=Interrupt Enable flag).

Table 7-1. Interrupt Sources And Associated Interrupt Vectors

Source of Interrupt or PEC Service Request	Request Flag	Enable Flag	Interrupt Vector	Vector Location	Trap Number
CAPCOM Register 0	**CC0IR**	**CC0IE**	**CC0INT**	**40h**	**10h**
CAPCOM Register 1	**CC1IR**	**CC1IE**	**CC1INT**	**44h**	**11h**
CAPCOM Register 2	**CC2IR**	**CC2IE**	**CC2INT**	**48h**	**12h**
CAPCOM Register 3	**CC3IR**	**CC3IE**	**CC3INT**	**4Ch**	**13h**
CAPCOM Register 4	**CC4IR**	**CC4IE**	**CC4INT**	**50h**	**14h**
CAPCOM Register 5	**CC5IR**	**CC5IE**	**CC5INT**	**54h**	**15h**
CAPCOM Register 6	**CC6IR**	**CC6IE**	**CC6INT**	**58h**	**16h**
CAPCOM Register 7	**CC7IR**	**CC7IE**	**CC7INT**	**5Ch**	**17h**
CAPCOM Register 8	**CC8IR**	**CC8IE**	**CC8INT**	**60h**	**18h**
CAPCOM Register 9	**CC9IR**	**CC9IE**	**CC9INT**	**64h**	**19h**
CAPCOM Register 10	**CC10IR**	**CC10IE**	**CC10INT**	**68h**	**1Ah**
CAPCOM Register 11	**CC11IR**	**CC11IE**	**CC11INT**	**6Ch**	**1Bh**
CAPCOM Register 12	**CC12IR**	**CC12IE**	**CC12INT**	**70h**	**1Ch**
CAPCOM Register 13	**CC13IR**	**CC13IE**	**CC13INT**	**74h**	**1Dh**
CAPCOM Register 14	**CC14IR**	**CC14IE**	**CC14INT**	**78h**	**1Eh**
CAPCOM Register 15	**CC15IR**	**CC15IE**	**CC15INT**	**7Ch**	**1Fh**
CAPCOM Timer 0	**T0IR**	**T0IE**	**T0INT**	**80h**	**20h**
CAPCOM Timer 1	**T1IR**	**T1IE**	**T1INT**	**84h**	**21h**
GPT1 Timer 2	**T2IR**	**T2IE**	**T2INT**	**88h**	**22h**
GPT1 Timer 3	**T3IR**	**T3IE**	**T3INT**	**8Ch**	**23h**
GPT1 Timer 4	**T4IR**	**T4IE**	**T4INT**	**90h**	**24h**
GPT2 Timer 5	**T5IR**	**T5IE**	**T5INT**	**94h**	**25h**
GPT2 Timer 6	**T6IR**	**T6IE**	**T6INT**	**98h**	**26h**
GPT2 CAPREL Register	**CRIR**	**CRIE**	**CRINT**	**9Ch**	**27h**
A/D Conversion Complete	**ADCIR**	**ADCIE**	**ADCINT**	**A0h**	**28h**
A/D Overrun Error	**ADEIR**	**ADEIE**	**ADEINT**	**A4h**	**29h**
Serial channel 0 Transmit	**S0TIR**	**S0TIE**	**S0TINT**	**A8h**	**2Ah**
Serial channel 0 Receive	**S0RIR**	**S0RIE**	**S0RINT**	**ACh**	**2Bh**
Serial channel 0 Error	**S0EIR**	**S0EIE**	**S0EINT**	**B0h**	**2Ch**
Serial channel 1 Transmit	**S1TIR**	**S1TIE**	**S1TINT**	**B4h**	**2Dh**
Serial channel 1 Receive	**S1RIR**	**S1RIE**	**S1RINT**	**B8h**	**2Eh**
Serial channel 1 Error	**S1EIR**	**S1EIE**	**S1EINT**	**BCh**	**2Fh**

The vector locations for hardware traps and the corresponding status flags in register TFR are listed in table 7.2. Also listed are the priorities of trap service in case simultaneous trap conditions might be detected within the same instruction. After any reset (hardware reset, software reset instruction SRST, or reset by watchdog timer overflow), program execution starts from location 0000h. Reset conditions have priority over every other system activity and therefore have the highest priority (trap priority III). For more details on reset refer to chapter 1.

Software traps may be performed to any vector location between 0h and 1FCh. A routine entered by a software TRAP instruction is always executed on the current CPU priority level which is indicated in the ILVL field in the PSW. This means that routines entered via the software TRAP instruction can be interrupted by all hardware traps or higher level interrupt requests.

Table 7-2. Reset And Trap Vector Locations

Exception Condition	Trap Flag	Trap Vector	Vector Location	Trap Number	Trap Priority
Reset Functions :					
Hardware Reset	**-**	**RESET**	**0h**	**0h**	**III**
Software Reset	**-**	**RESET**	**0h**	**0h**	**III**
Watchdog Timer Overflow	**-**	**RESET**	**0h**	**0h**	**III**
Class A Hardware Traps :					
Non-Maskable Interrupt	**NMI**	**NMITRAP**	**08h**	**2h**	**II**
Stack Overflow	**STKOF**	**STOTRAP**	**10h**	**4h**	**II**
Stack Underflow	**STKUF**	**STUTRAP**	**18h**	**6h**	**II**
Class B Hardware Traps :					
Undefined Opcode	**UNDOPC**	**BTRAP**	**28h**	**Ah**	**I**
Protected Instruction Fault	**PRTFLT**	**BTRAP**	**28h**	**Ah**	**I**
Illegal Word Operand Access	**ILLOPA**	**BTRAP**	**28h**	**Ah**	**I**
Illegal Instruction Access	**ILLINA**	**BTRAP**	**28h**	**Ah**	**I**
Illegal External Bus Access	**ILLBUS**	**BTRAP**	**28h**	**Ah**	**I**
Reserved			**[2Ch-3Ch]**	**[Bh-Fh]**	
Software Traps					
TRAP Instruction			**Any [0h-1FCh] in steps of 4h**	**Any [0h-7Fh]**	**Current CPU Priority**

7.2 NORMAL INTERRUPT PROCESSING AND PEC SERVICE

The priority of service for interrupts and PEC requests is completely programmable. Each source request can be assigned to a specific priority. Once per instruction cycle, all sources which require PEC or interrupt processing will contend for servicing. Every requesting source will try to exert its priority on the interrupt system. A special mechanism (called ‘group priority’) has been implemented that allows the specification of the order of service for simultaneous requests from a group of different sources on the same priority level. At the end of the instruction cycle, only one source with the highest priority will be left with control of the interrupt system. This source will then be enabled for servicing if the priority of the request is higher than the current CPU priority in the PSW. This arbitration, which occurs once every instruction cycle, is called a ‘round of prioritization’.

7.2.1 Interrupt System Register Description

Interrupt processing is controlled globally by the PSW through a general interrupt enable bit (IEN) and the CPU priority field (ILVL). Additionally, the different interrupt sources are controlled individually by their specific interrupt control registers. Thus, the acceptance of requests by the CPU is determined by both the individual interrupt control registers and the PSW. For PEC service, one additional dedicated register and 2 pointers must be programmed in order to specify the task which is to be performed by the respective PEC service channel.

7.2.1.1 INTERRUPT CONTROL REGISTERS

All interrupt control registers are organized identically. An interrupt control register is 8 bits wide and contains the complete interrupt status information of the associated source which is required during one round of prioritization. All interrupt control registers are bit addressable, and all bits can be read or written by software. This allows each interrupt source to be programmed or modified with just one instruction. When accessing interrupt control registers through instructions which operate on word data types, bits 8 through 15 will be read as zeros, while the written value is insignificant.

Besides, an example of the ST10x166's Interrupt Control registers xxIC is shown, where xx replaces the mnemonic for the specific source. Each interrupt control register with its name and address will be shown in the specific section on the peripheral it is associated with (see chapter 8). The function of each single or multiple bit field of an interrupt control register is described in more detail in the following paragraphs.

xxIR - Interrupt Request Flag

This bit is set by hardware whenever a service request from source xx occurs. The Interrupt Request flag is automatically cleared upon entry to the interrupt service routine or upon service of the request by the PEC. In the case of PEC service, the Interrupt Request flag remains set if the COUNT field of the selected PEC channel goes to zero (see section 7.2.2.1 for details). This allows a normal CPU interrupt to respond to a completed PEC block transfer. Modifying the Interrupt Request flag by software causes the same effects as if it had been set or cleared by hardware.

xxIC

Interrupt Control Register for Source xx

Reset Value :0000h

7	6	5	4	3	2	1	0
xxIR	xxIE	ILVL				GLVL	

b7 = xxIR: **Interrupt Request Flag.**
xxIR = 0: No interrupt request
xxIR = 1: Interrupt request.

b6 = xxIE: **Interrupt Enable Control Bit.**
xxIE = 0: Interrupt disabled
xxIE = 1: Interrupt enabled.

b5 to b2 = ILVL: **Interrupt Priority Level.**
ILVL = Fh: Highest priority level
ILVL = 0: Request will not be serviced.

b1, b0 = GLVL: **Interrupt Group Priority.**
GLVL = 3: Highest group priority
GLVL = 0: Lowest group priority.

xxIE - Interrupt Enable Flag

This bit is used to individually enable or disable the acceptance of a service request.

ILVL - Interrupt Priority Level Field, xxIC[5..2]

These four bits specify the priority level of a service request. Values from 0h through Fh can be specified in this field, where Fh represents the highest priority level.

Interrupt requests that are programmed to priority levels 15 or 14 (i.e. ILVL=111Xb) will be serviced by the PEC, unless the COUNT field of the associated PEC channel contains zero. In this case, the request will be serviced by normal interrupt processing. Interrupt requests that are programmed to priority levels 13 through 1 will always be serviced by normal interrupt processing.

For interrupt requests which are selected for PEC service by the method described above, the LSB of ILVL represents the MSB of the associated PEC channel number. In other words, by programming a source on priority level 15 (ILVL=1111b), PEC channels 7 through 4 can be selected. By programming a source on priority level 14 (ILVL=1110b),

PEC channels 3 through 0 can be selected. The actual PEC channel number is then determined by the Group Priority field GLVL which is described in the following paragraph. Figure 7.1 shows the mapping of the ILVL and GLVL fields and their interpretation during a round of prioritization.

During the prioritization process, the ILVL fields of all interrupt requesting sources are compared to the current CPU priority level which is contained in the ILVL field of the PSW. An interrupt request of higher priority than the current CPU priority can interrupt the executing routine.

Upon entry into an interrupt service routine, the priority level of the source that won the arbitration is copied into the ILVL field of the PSW after pushing the old PSW contents on the stack.

The interrupt system of the ST10x166 allows nesting of up to 15 interrupt service routines of different priority levels. Note that an interrupt source which is programmed to priority level 0 will never be serviced by the CPU, because its priority level can never be higher than the CPU priority.

GLVL - Interrupt Group Priority Field, xxIC[1..0]

These two bits are interpreted as the relative priority of an interrupt service request within a group of simultaneous requests from different sources on the same priority level. For sources which are programmed for PEC service in their ILVL fields, the 2 bits of GLVL represent the 2 LSBs of the associated PEC channel number. See also figure 7.1. The group priority field is particularly relevant for resolving simultaneous interrupt requests from several sources on the same priority level. Up to 4 sources can be programmed to the same priority level. They are prioritized according to their group priority, where 3 is highest group priority. This also means that simultaneous requests for PEC service are prioritized according to their PEC channel number: the PEC channel with the highest number has the highest priority.

Note: **All interrupt sources that are enabled and programmed to the same priority level must always be programmed to different group priorities. Otherwise, an incorrect interrupt vector will be generated.**

Figure 7.2 exemplifies the possible configurations which can be programmed in the interrupt control registers.

7.2.1.2 INTERRUPT CONTROL FUNCTIONS IN THE PSW

Figure 7-1. Mapping Of ILVL And GLVL Fields For The Interrupt Control Registers

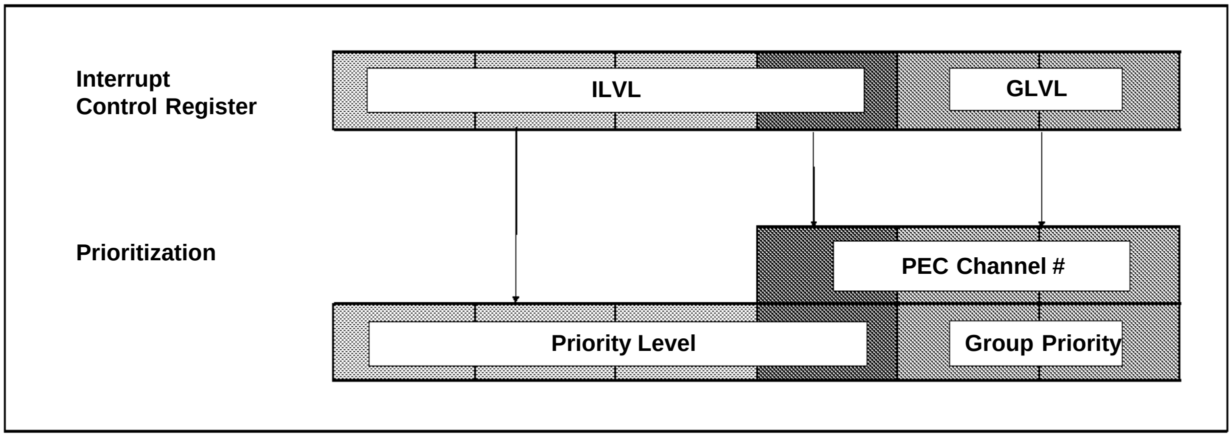

Figure 7-2. Examples Of Possible Configurations In The Interrupt Control Registers

Field		Type of Service (COUNT: PEC Transfer Counter field Of Selected PEC Channel)
ILVL	GLVL	
1 1 1 1	1 1	If COUNT ≠ **0: PEC Service, Channel 7**
1 1 1 1	1 1	If COUNT **= 0: CPU Interrupt, Priority Level 15, Group Priority 3**
1 1 1 1	1 0	If COUNT ≠ **0: PEC Service, Channel 6**
1 1 1 1	1 0	If COUNT **= 0: CPU Interrupt, Priority Level 15, Group Priority 2**
1 1 1 0	1 1	If COUNT ≠ **0: PEC Service, Channel 3**
1 1 1 0	1 1	If COUNT **= 0: CPU Interrupt, Priority Level 14, Group Priority 3**
1 1 1 0	0 0	If COUNT ≠ **0: PEC Service, Channel 0**
1 1 1 0	0 0	If COUNT **= 0: CPU Interrupt, Priority Level 14, Group Priority 0**
1 1 0 1	1 1	**CPU Interrupt, Priority Level 13, Group Priority 3**
1 1 0 1	1 0	**CPU Interrupt, Priority Level 13, Group Priority 2**
1 1 0 1	0 1	**CPU Interrupt, Priority Level 13, Group Priority 1**
1 1 0 1	0 0	**CPU Interrupt, Priority Level 13, Group Priority 0**
0 0 0 1	0 0	**CPU Interrupt, Priority Level 1, Group Priority 0**
0 0 0 0	1 1	**No Service**
0 0 0 0	1 0	**No Service**
0 0 0 0	0 1	**No Service**
0 0 0 0	0 0	**No Service**

The Processor Status Word (PSW) is functionally divided into 2 parts: the lower byte of the PSW basically represents the arithmetic status of the CPU, the upper byte of the PSW controls the interrupt system of the ST10x166. This section specifically refers only to those fields of the PSW that globally control interrupt and PEC service functions. The organization of the PSW is shown in figure 7.3.

ILVL - CPU Priority Field, PSW[15..12]

These four bits represent the priority level of the routine that is currently being executed by the CPU. During reset, the CPU Priority field is initialized to the lowest priority level (i.e. level 0). Upon entry to an interrupt service routine, the four bits from the interrupt source's Priority Level field ILVL are copied into these four bits of the PSW, after the previous contents of the PSW have been pushed onto the system stack.

To determine which interrupt will be serviced, the interrupt system continuously compares the current CPU priority to the priority levels of all pending interrupts. Modifying the ILVL field of the PSW offers the capability of programming the priority level below which the CPU can not be interrupted.

Because a PEC data transfer takes only one instruction cycle and is never interrupted, the CPU priority field remains unaffected by a PEC service.

For hardware traps, the CPU priority is set to the highest priority level (i.e. 15) in the ILVL field of the PSW. Therefore, no interrupt or PEC request can be serviced while an exception trap service routine is in progress. The software TRAP instruction, however, does not change the CPU priority in the ILVL field of the PSW, thus it can be interrupted by higher level requests.

IEN - Interrupt Enable Control Bit, PSW.11

This bit globally enables or disables PEC operation and the acceptance of interrupts by the CPU. When IEN is cleared, no interrupt requests are accepted by the CPU. When IEN is set to '1', all interrupt sources, which have been individually enabled by the Interrupt Enable bits in their associated control registers, are globally enabled.

Note: Traps are non-maskable and are therefore not affected by the IEN bit.

7.2.2 PEC Service Channels Register Description

Figure 7-3. Interrupt Control Functions In The PSW

PSW **(FF10h / 88h)**
Processor Status Word
Reset Value : 0000h

15	14	13	12	11	10	9	8
ILVL				IEN	HLDEN	R	

7	6	5	4	3	2	1	0
R	USR0	MULIP	E	Z	V	C	N

The ST10x166's Peripheral Event Controller (PEC) provides 8 PEC Service Channels. Upon an interrupt request, a PEC channel is capable of performing a single byte or word data transfer between any two memory locations in segment 0 (data pages 0 through 3). Each channel consists of a dedicated PEC Channel Counter/Control register and a pair of pointers for source and destination of the data transfer.

7.2.2.1 PEC CHANNEL COUNTER/CONTROL REGISTERS

Each of the 8 PEC service channels implemented in the ST10x166 is supplied with a separate PEC Channel Counter/Control register. Note that these registers are NOT bit addressable. They will be referred to as PECCy, where y represents the number of the associated PEC channel (y=0 through 7). Each register specifies the task which is to be performed by the associated PEC channel. A specific PEC channel is selected by an interrupt source through the ILVL and GLVL field in the interrupt control register of the respective source (see figure 7.1). Table 7.3 lists all PEC Channel counter/control registers, while their organization is shown besides. In the following, their function will be discussed in detail.

INC - Increment Control Field

This 2-bit field specifies whether the Source Pointer or the Destination Pointer of the associated PEC channel shall be incremented after a PEC data transfer. Only one of the 2 pointers (either the Source or the Destination Pointer) may be incremented, it is not possible to increment both pointers after a transfer. When the function 'increment no pointer' is selected (INC = 00b), the transfer is always performed between the same two memory locations.

Note: **When software tries to program the INC field to 11b, this value is modified by hardware to 10b.**

PECCy

PEC Channel Counter/Control Registers, Organization (y = 0 through 7)

Reset Value : 0000h

15	14	13	12	11	10	9	8
R					INC		BWT

7	6	5	4	3	2	1	0
COUNT							

b15 to b11 = R: **Reserved.**

b10, b9 = INC: **Increment Control Field:**
- INC = 00b: Increment no pointer
- INC = 01b: Increment destination pointer
- INC = 10b: Increment source pointer
- INC = 11b: (Reserved).

b8 = BWT: **Byte/Word Transfer Select bit:**
- BWT = 0: Word Transfer
- BWT = 1: Byte Transfer.

b7 to b0 = COUNT: **PEC Transfer Counter Field:**
- COUNT = FFh : Continuous transfer mode, COUNT value not decremented
- FEh ≥ COUNT ≥ 1 : COUNT value decremented after each transfer
- COUNT = 0: CPU interrupt is generated

Table 7-3. PEC Channel Counter/Control Registers, Summary

Control Register	Physical Address	8-Bit Address	Control Register	Physical Address	8-Bit Address
PECC0	**FEC0h**	**60h**	**PECC4**	**FEC8h**	**64h**
PECC1	**FEC2h**	**61h**	**PECC5**	**FECAh**	**65h**
PECC2	**FEC4h**	**62h**	**PECC6**	**FECCh**	**66h**
PECC3	**FEC6h**	**63h**	**PECC7**	**FECEh**	**67h**

This will cause the Source Pointer to be incremented after a PEC data transfer.

BWT - Byte/Word Transfer Selection Bit

This bit selects the data type to be transferred upon a PEC service request. When the BWT bit is set to ‘1’, the BYTE data type is selected for a PEC transfer.

When BWT is cleared, the selected data type for a PEC transfer is WORD. For byte transfers, the optional increment value of the source or destination pointer is 1. For word transfers, the optional increment value of the source or destination pointer is 2.

COUNT - PEC Transfer Counter Field

This 8-bit field is used to specify the number of data transfers to be performed by the respective PEC channel. Either an unlimited or a limited number of transfers (0 through 254) can be programmed. The Transfer Counter field operates as an 8-bit downcounter. Values from 0 through FFh can be specified in this field, where 0 and FFh have a special meaning.

If the COUNT value is between FEh and 2 at the time the PEC service request is generated, the value is decremented after each PEC data transfer. Also, the Interrupt Request flag of the source which generated the PEC service request is cleared.

If the COUNT value equals 1 at the time the PEC service request is generated, the value is decremented to zero after the PEC data transfer, but the Interrupt Request flag of the source which generated the request remains set. This will cause another request from the associated source.

If the COUNT value equals 0 at the time the request is generated, no PEC data transfer will be performed. Instead, a CPU interrupt request is generated on the same priority level (15 or 14) as the original PEC request. The CPU branches to the interrupt service routine of the source that generated the request. This interrupt service routine can be used to reprogram the associated PEC service channel.

Note: This feature can be used to specifically generate CPU interrupt requests on the 2 highest priority levels (level 15 or 14). For any source request on priority level 15 or 14 whose COUNT field of the associated PEC channel contains 0, a CPU interrupt request with the vector of that source is generated. Note that no PEC data transfer operation can be performed while the CPU is executing a routine on CPU priority level 15. While the CPU is executing a routine on CPU priority level 14, only PEC data transfers through service channels 4 through 7 can be processed.

If the Transfer Counter field has been set to FFh, the continuous transfer mode is selected for the respective PEC channel. In this mode, the COUNT value is not decremented, which means that an unlimited number of transfers will be performed by this PEC channel. The operation of a PEC Service Channel programmed for continuous transfer can only be terminated either by disabling PEC service, or by reprogramming its PEC Channel Counter/Control register. For the different possibilities of disabling interrupt sources, see section 7.2.3.1.

7.2.2.2 PEC SOURCE AND DESTINATION POINTERS

Eight pairs of word-wide pointers are associated with the 8 PEC Service Channels. Each pair is directly assigned to one specific PEC channel. Each of these pairs of pointers consists of a Source Pointer, which contains the source address of the PEC data transfer, and a Destination Pointer, which contains the respective destination address.

These pointers share the top 16 word locations (byte addresses FDE0h through FDFFh) in the internal RAM. If no PEC service is required for a specific PEC channel, the locations of its pointers can be used for general data storage.

Note: If word data transfer is selected for a specific PEC channel (i.e. bit BWT=0), the respective Source and Destination Pointers must both contain a valid word address which points to an even byte boundary. Otherwise the Illegal Word Access trap will be invoked when this channel is used (see section 7.3.2.6).

In the following, a Source Pointer will be referred to as SRCPx, and a Destination Pointer will be referred to as DSTPx, where x indicates the number of the associated PEC Service Channel (x=0 through 7). Figure 7.4 shows the mapping of the PEC Source and Destination Pointers into the internal RAM.

Note that for all PEC data transfers, the data page pointers DPP0 through DPP3 are NOT used. The addresses contained in the PEC source and destination pointers are interpreted as direct 16-bit memory addresses in segment 0, so that data transfers can be performed between any two memory locations within the first four data pages (pages 0 through 3).

7.2.3 Prioritization of Interrupt and PEC Service Requests

Figure 7-4. Mapping Of PEC Source And Destination Pointers into the Internal RAM

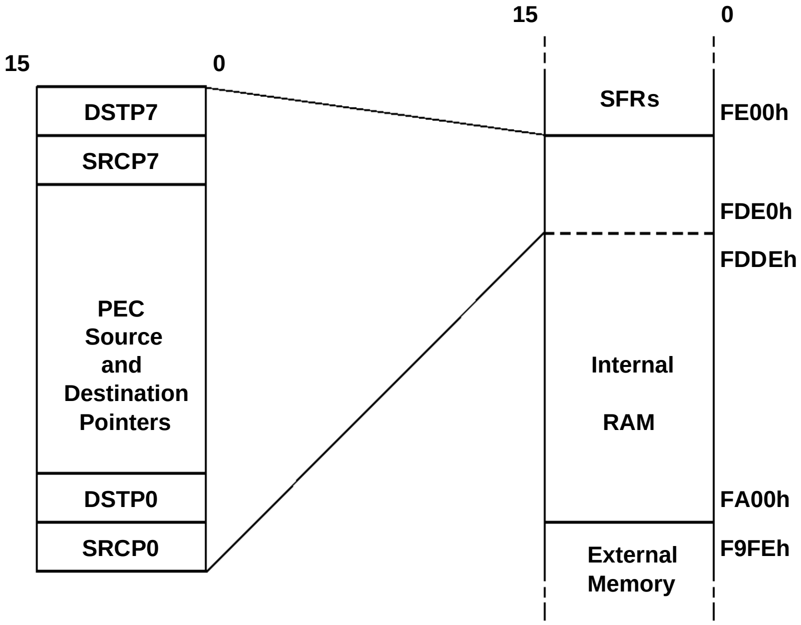
15
0
DSTP7
SRCP7
PEC Source and Destination Pointers
DSTP0
SRCP0
15
0
SFRs
FE00h
FDE0h
FDDEh
Internal RAM
FA00h
F9FEh
External Memory

PEC Source Pointer	RAM Location (Word Address)	PEC Destination Pointer	RAM Location (Word Address)
SRCP0	**FDE0h**	**DSTP0**	**FDE2h**
SRCP1	**FDE4h**	**DSTP1**	**FDE6h**
SRCP2	**FDE8h**	**DSTP2**	**FDEAh**
SRCP3	**FDECh**	**DSTP3**	**FDEEh**
SRCP4	**FDF0h**	**DSTP4**	**FDF2h**
SRCP5	**FDF4h**	**DSTP5**	**FDF6h**
SRCP6	**FDF8h**	**DSTP6**	**FDFAh**
SRCP7	**FDFCh**	**DSTP7**	**FDFEh**

Interrupt and PEC service requests from all sources that are enabled compete for service in the prioritization process. The prioritization sequence is repeated every instruction cycle.

7.2.3.1 ENABLING AND DISABLING OF INTERRUPT SOURCES

Enabling and disabling of interrupt sources can be performed in several ways:

1) Each interrupt source can be individually enabled or disabled by setting or clearing its Interrupt Enable flag in the interrupt control register that is associated with this source. However, as long as the global Interrupt Enable control bit IEN in the PSW has not been set, all interrupt sources remain globally disabled and no interrupt requests will be acknowledged by the CPU.
2) When the IEN bit in the PSW is set to '1', all interrupt sources that have been individually enabled become globally enabled. Interrupt requests which are generated by these sources can then participate in the prioritization process. The requests will be acknowledged by the CPU according to their priority.
3) By programming the ILVL field of an Interrupt Control register to level 0, the associated source can never interrupt the CPU.
4) Programming the CPU priority in the PSW to a certain level prevents the CPU from being interrupted by requests on the same or any lower level. With this method, all interrupts below a certain level can be disabled with one instruction, e.g. the Bit F ield (BFLDH) instruction.

7.2.3.2 PRIORITY LEVEL STRUCTURE

In the ST10x166's interrupt system, the priority of a request for interrupt or PEC service is completely programmable. All enabled source requests must be programmed to different priorities, which means that sources which are programmed to the same priority level must be programmed to different group priorities. Otherwise, undetermined results may occur for the interrupt vector. Using the group priorities 0 through 3, up to 4 sources can be programmed to the same priority level.

The advantage of this priority scheme is that the order for servicing of simultaneous requests from different sources on the same priority level is not fixed by the system but can be assigned via software.

In all cases, the source on the highest priority level which also has the highest group priority wins the current round of prioritization. Whether the request of this source will be accepted by the CPU or not depends on the current CPU priority. If the priority of the requesting source is higher, the request is acknowledged and the CPU passes control to the source's interrupt vector.

The interrupt system supports 16 different priority levels. Only 15 of those levels are actually effective priority levels because requests on level 0 are not capable of interrupting the CPU. Therefore, up to 15 interrupt service routines on different priority levels can be nested. In the following section, a method will be described which allows the limitation of nested interrupt levels to a number less than 15. This may be desirable for reasons of stack efficiency.

Normally, the 2 highest priority levels (level 15 and 14) are used by PEC requests. Those levels can also be used to process a high priority CPU interrupt if the COUNT field of the selected PEC channel contains 0 at the time this channel is invoked (see section 7.2.2.1).

7.2.3.3 EXAMPLE FOR THE USE OF THE CPU PRIORITY

The priority level of the routine currently being serviced by the CPU is indicated in the CPU Priority field (ILVL) of the PSW. Modifying the CPU Priority field of the PSW by software adds additional flexibility to the interrupt system of the ST10x166. For example, it provides the user with a means of 'reducing' the implemented number of 16 priority levels to any smaller integer number. This may be desirable to prevent a group of several different tasks with similar importance from interrupting each other. It also reduces the stack depth. For up to 4 tasks per group, this can simply be done by assigning the associated interrupt sources to the same priority level (in their ILVL field), but to different group priorities (in their GLVL field).

To prevent a group of more than 4 tasks with similar importance from interrupting each other, the first action within an interrupt service routine of each of these tasks could be to set the CPU Priority field to the priority level (ILVL) of the source with the highest priority within this group. In this way, interrupt or PEC service requests of higher priority other than in this group are still accepted.

All interrupt requests of lower or equal priority become pending. Thus, the interrupt system operates as if all tasks of the group were on the same priority level.

For example, an application may have 24 interrupt sources, where these sources must be organized in 3 priority classes with 8, 10, and 6 sources per class. In the priority scheme of the ST10x166, the 24 sources could be organized and configured as follows:

In this example, the 3 user-defined priority levels are called ‘classes’. Each of the three classes A through C includes interrupt sources on 2 or 3 priority levels of the interrupt system. The 2 highest priority levels of the interrupt system are used by the PEC service functions. Priority level 0 does not provide interrupt service. With the organization shown in table 7.4, any acknowledged interrupt from the sources within a class (e.g. A) must set the CPU Priority field of the PSW to the highest priority level contained in its class (e.g. 8 for class B) at the beginning of its interrupt service routine.

Table 7-4. Example of 24-Interrupt Organization In 3 Classes

ILVL	GLVL				Organization
	3	2	1	0	
Fh					**PEC Service, 8 Channels**
Eh					
Dh					
Ch	x	x	x	x	**Class A, 8 Interrupts**
Bh	x	x	x	x	
Ah					
9					
8	x	x	x	x	**Class B, 10 Interrupts**
7	x	x	x	x	
6	x	x			
5	x	x	x	x	**Class C, 6 Interrupts**
4	x	x			
3					
2					
1					
0					**No Service**

Using this technique, interrupts generated by the lowest class (i.e. C) can be interrupted by a request from higher classes (i.e. B or A). However, an interrupt service routine of a source that belongs to the highest class (i.e. A) can not be interrupted by requests of the same or lower classes.

7.2.4 Interrupt Procedure

Once an interrupt has been selected for servicing, the state of the task currently being executed by the CPU is saved on the system stack. To ensure correct return to the location where the task had been interrupted, the information stored on the stack also depends on whether segmentation is currently enabled, as indicated by the SGTDIS bit in the SYSCON register.

7.2.4.1 INTERRUPT PROCEDURE WITH SEGMENTATION DISABLED

If segmentation is disabled, the contents of the PSW and the contents of the IP are pushed on the system stack. The interrupt source's priority level is then copied into the CPU Priority field of the PSW. If a multiply or divide operation was in progress when the interrupt was acknowledged, the MULIP bit in the PSW of the interrupt service routine is set to '1'. The Interrupt Request Flag of the source that caused the interrupt is cleared. The CPU then passes control to the source's interrupt vector. The pushed IP contains the address of the instruction to which execution will return after the interrupt service routine is completed.

Upon execution of the RETI instruction (Return from Interrupt), the information that was pushed on the stack is popped in reverse order. In this way, the status of the interrupted routine is restored. Figure 7.5 shows how the system stack is affected when an interrupt is acknowledged while segmentation is disabled.

7.2.4.2 INTERRUPT PROCEDURE WITH SEGMENTATION ENABLED

Figure 7-5. Interrupt Procedure With Segmentation Disabled

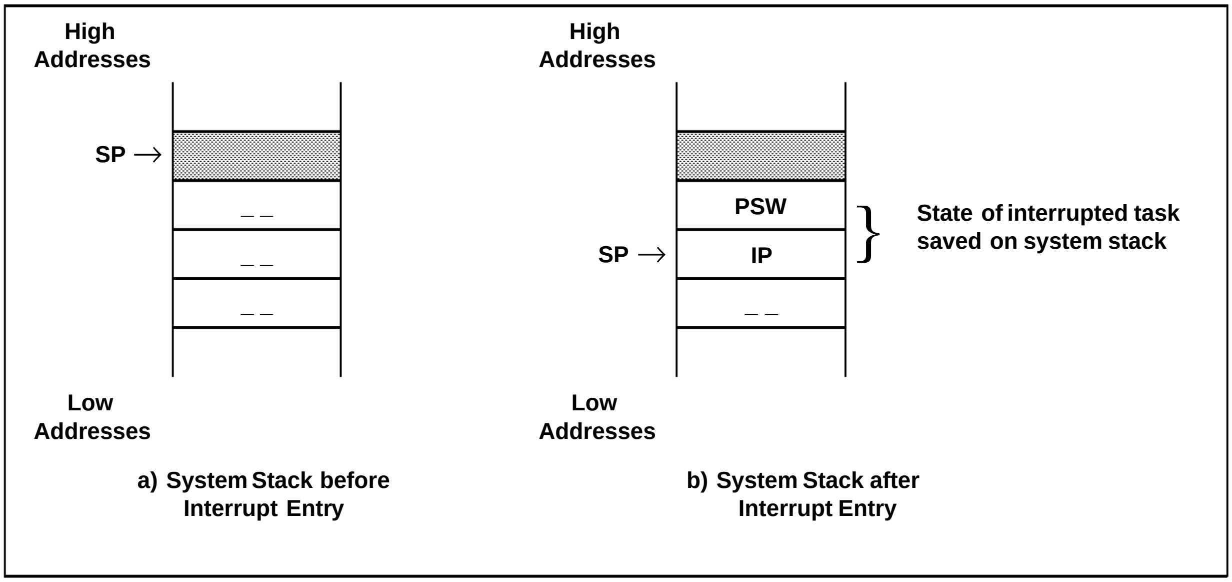

a) System Stack before Interrupt Entry

b) System Stack after Interrupt Entry

The procedure that will be performed by the ST10x166's interrupt system when segmentation is enabled is independent of the code segment that the CPU is currently executing from.

If segmentation is used when an interrupt request is acknowledged, the Code Segment Pointer (CSP) must also be pushed on the system stack to ensure correct return to the previous segment after completion of the interrupt service routine. The contents of the PSW are pushed first, then the contents of the CSP and IP are pushed on the system stack. The CSP for the interrupt service routine is set to segment zero. As with segmentation disabled, the interrupt source's priority level is copied into the CPU Priority field of the PSW, and the Interrupt Request flag of the source that caused the interrupt is cleared. If a multiply or divide operation was in progress when the interrupt was acknowledged, the MULIP bit in the PSW of the interrupt service routine is set to '1'. No data page pointer is affected.

Upon execution of the RETI instruction (Return from Interrupt), the information that was pushed on the stack is popped in reverse order to restore the previous status. Figure 7 .6 shows how the system stack is affected by an interrupt that is acknowledged when segmentation is enabled.

7.2.4.3 CONTEXT SWITCHING FOR INTERRUPT SERVICE ROUTINES

Figure 7-6. Interrupt Procedure With Segmentation Enabled

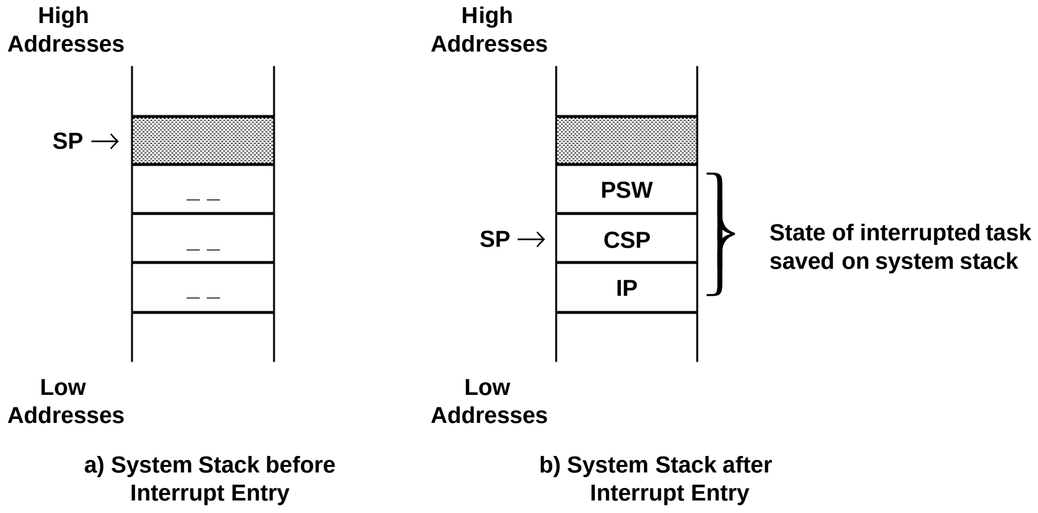
High Addresses
SP →
_ _
_ _
_ _
Low Addresses
a) System Stack before Interrupt Entry
High Addresses
PSW
SP →
CSP
IP
State of interrupted task saved on system stack
Low Addresses
b) System Stack after Interrupt Entry

Context switching in conjunction with processing an interrupt service routine allows establishing a new context within the interrupt service routine. Thus, a completely new set of General Purpose Registers (GPRs) can be provided for the interrupt service routine, without the need of explicitly saving and restoring registers.

Context switching can be performed by executing the Switch Context instruction (SCXT) within the interrupt service routine before any GPR is accessed. For example, the instruction SCXT CP, #New Bank is used to push the previous value of the Context Pointer (CP) on the system stack and set the CP to the value #New Bank which is specified as an immediate operand in the SCXT instruction. Note that GPRs in the new register bank should not be accessed by the instruction immediately following the SCXT instruction (see also section 5.1.4).

Before executing the RETI instruction at the end of an interrupt service routine, the previous Context Pointer must be popped from the system stack to ensure correct return to the previous context.

7.2.5 Interrupt Processing via the Peripheral Event Controller PEC

As an alternative to software oriented interrupt processing, the PEC provides a way to minimize interrupt latency and software overhead in cases where only a single data transfer operation is required to service a peripheral device. As all the ST10x166's peripheral functions are controlled by Special Function Registers (SFRs), it is sufficient for many applications to simply transfer data to or from the Special Function Registers and a data memory location to handle service requests. Examples would be storing of results from the A/D converter, or data from a serial channel. With the ST10x166's PEC, data transfers between two memory locations in segment 0 (data page 0 through 3) are possible.

The PEC data transfer itself does not affect the IP or the flags in the PSW. Therefore, no program status information needs to be saved when the PEC performs a data transfer. This improves the overall system throughput and speeds up the servicing of peripheral requests.

The priority level structure of the ST10x166's interrupt system has been designed such that requests for PEC service have priority over requests for CPU interrupt service. Exceptions to this are when the CPU is executing a routine on CPU priority

level 15 or 14. While the CPU is executing a routine on CPU priority level 14, only PEC data transfers through service channels 4 through 7 can be processed. While the CPU is executing a routine on CPU priority level 15, no PEC data transfers can be processed.

When an interrupt request that has been programmed for PEC service is selected for servicing by the prioritization circuit, the PEC performs one data transfer operation. The data type (byte or word) for this transfer is determined by bit BWT in the PEC channel control register PECCy of the respective PEC channel. The source and the destination of this data transfer are pointed to by source pointer SRCPy and destination pointer DSTPy.

After completion of the transfer operation, one of the 2 pointers can optionally be incremented and the channel's transfer counter COUNT can be decremented. When the transfer counter reaches 0, a normal CPU interrupt request is generated and the associated interrupt service routine can be used to reprogram the affected PEC channel. A functional diagram of the basic PEC service procedure is shown in figure below.

Note: **All sources which are requesting PEC service should be programmed to the same PEC service channel ONLY if it is ensured that they do not generate simultaneous requests while the COUNT field of the respective channel contains 1. In the case of simultaneous requests where the COUNT field contains a value greater than 1 at the time the PEC channel is invoked, only one PEC data transfer will be performed for all of the simultaneous requests. When the COUNT field contains 1 and simultaneous PEC requests for this channel are generated, one PEC data transfer is performed, and an interrupt to an undetermined vector address may occur.**

7.2.6 Interrupt and PEC Response Times

Figure 7-7. PEC Service Procedure

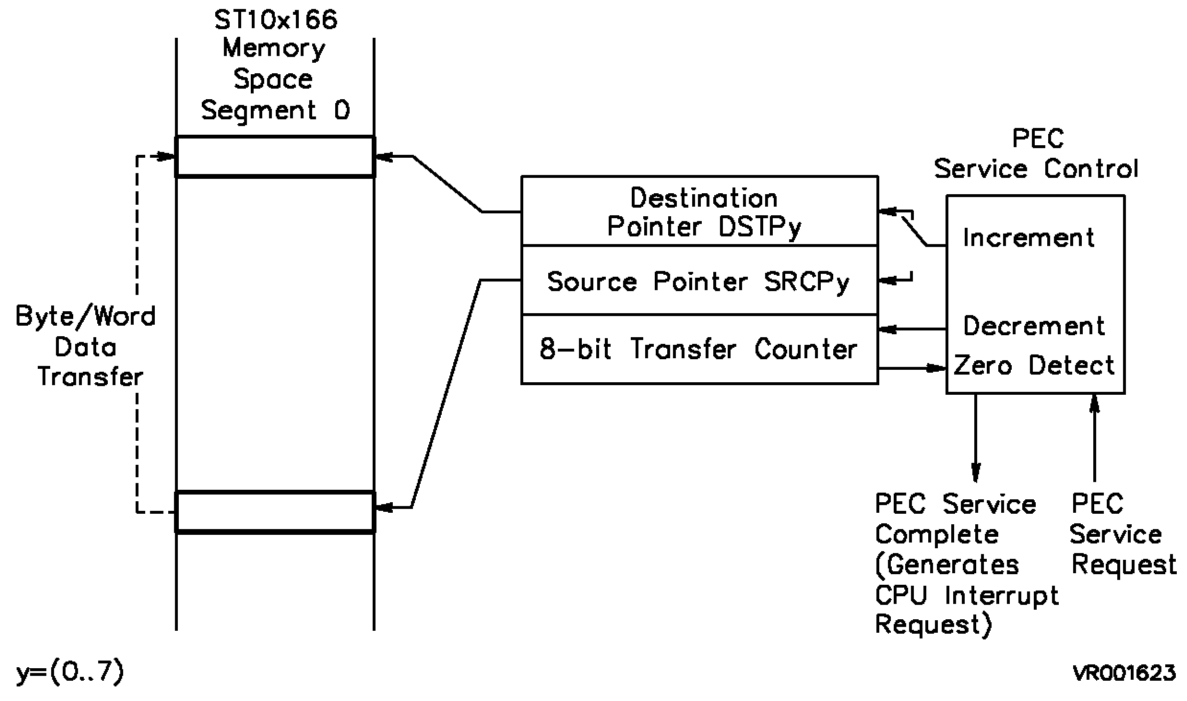
ST10x166
Memory
Space
Segment 0
Byte/Word
Data
Transfer
Destination
Pointer DSTPy
Source Pointer SRCPy
8-bit Transfer Counter
PEC
Service Control
Increment
Decrement
Zero Detect
PEC Service
Complete
(Generates
CPU Interrupt
Request)
PEC
Service
Request
y=(0..7)
VR001623

Interrupt response time is defined as the time required from the moment an interrupt request flag of an enabled interrupt source is set until fetching of the first instruction I1 at the interrupt vector location can begin. In general, the interrupt response time in the ST10x166 is 3 instruction cycles. It depends on the instructions N through N-3 which are in the pipeline at the time the request flag is set, and on the following two instructions N+1 and N+2. This is explained by the pipeline diagram in figure 7.8.

Figure 7-8. Pipeline Diagram For Interrupt Response

FETCH	**N**	**N + 1**	**N + 2**	**I1**
DECODE	**N - 1**	**N**	**TRAP (1)**	**TRAP (2)**
EXECUTE	**N - 2**	**N - 1**	**N**	**TRAP**
WRITEBACK	**N - 3**	**N - 2**	**N - 1**	**N**

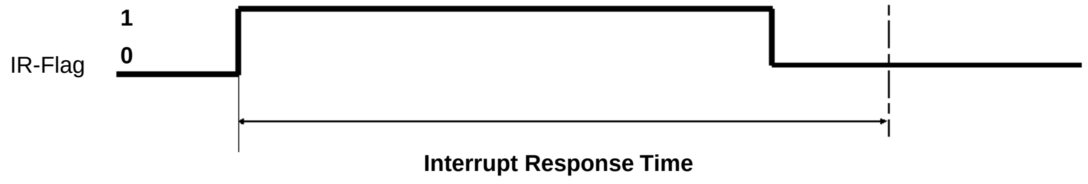

Whenever the pipeline is advanced and a new instruction cycle is started, all sources whose interrupt request flags have been set during the previous cycle compete for service in a round of prioritization. In the next cycle, a TRAP is performed to the vector location of the winning source, and the source's interrupt request flag is reset to '0'. Fetching of the instruction I1 at the vector location is started in the following cycle. All instructions that are in the pipeline at the time the interrupt request flag is set will be completed before the interrupt service routine, while the following instruction N+1 will be executed after return from the interrupt service routine. As can be seen from figure 7.8, the TRAP instruction requires two cycles to push the PSW generated by instruction N and the IP and (in segmentation mode) the CSP of instruction N+1.

The minimum interrupt response time is 5 states (250ns at 40MHz). This applies to program execution from the internal ROM when no external operand read requests are performed, and when the interrupt request flag is set during the last state of an instruction cycle. When the interrupt request flag is set during the first state of an instruction cycle, the minimum interrupt response time under these conditions is 6 state times (300ns at 40MHz).

In general, all delays with respect to the standard instruction execution time which may occur during execution of instructions in the pipeline may result in a longer interrupt response time. When internal hold conditions between instruction pairs N-2/N-1 or N-1/N occur, or instruction N explicitly writes to the PSW, the minimum interrupt response time may be extended by 1 state time for each of these conditions. When instruction N reads an operand from the internal ROM, or when N is a call, return, trap, or MOV Rn, [Rm+ #data16] instruction, the minimum interrupt response time may additionally be extended by 2 state times during internal ROM program execution. In case instruction N reads the PSW and instruction N-1 has an effect on the condition flags, the interrupt response time may additionally be extended by 2 state times. The worst case interrupt response time during internal ROM program execution is 12 state times (500 ns at 40MHz). See paragraph 5 for more details on instruction timing.

The absolute worst case interrupt response time will occur when instructions N through N+2 are executed out of an external memory, instructions N and N+1 require external operand read accesses, instructions N-3 through N write back external operands, and the interrupt vector location is also in the external memory. In this case, the interrupt response time is the time to perform 9 word bus accesses, because instruction I1 can not be fetched over the external bus until all write, fetch and read requests of preceding instructions in the pipeline are terminated. Under the same conditions, but with the interrupt vector location in the internal ROM, the interrupt response time is 7 word bus accesses plus 2 states, because fetching of I1 from the internal ROM can start earlier. Note that these worst case situations are rather untypical and occur only when instructions N and N-1 are indirect MOV instructions between two external memory locations. When instructions N through N+2 are executed out of an external memory, and the interrupt vector location is also in external memory, but all operands for instructions N-3 through N are in internal memory, then the interrupt response time is the time to perform 3 word bus accesses. Under the same conditions, but with the interrupt vector location in the internal ROM, the interrupt response time is 1 word bus access plus 4 states.

After an interrupt service routine has been terminated through execution of the RETI instruction, and if further interrupts are pending, the next interrupt service routine will not be entered until at least two instruction cycles have been executed in the program section returned to. In most cases, two instructions will be executed during this time. Only one instruction will typically be executed if the first instruction following the RETI instruction is a branch instruction (without cache hit), or if it reads an operand in the internal ROM, or if it is executed out of the internal RAM.

Similar to the interrupt response time, the response time for a PEC data transfer request can be defined as the time required from the moment an interrupt request flag has been set until the PEC data transfer is started. In general, the PEC response time in the ST10x166 is 2 instruction cycles. It depends on the instructions N-3 through N which are in the pipeline at the moment the request flag is set, and on the following instruction N+1. This is explained by the pipeline diagram in figure 7.9.

Figure 7-9. Pipeline Diagram For PEC Response Time

FETCH	**N**	**N + 1**	**N + 2**	**N + 2**
DECODE	**N - 1**	**N**	**PEC**	**N + 1**
EXECUTE	**N - 2**	**N - 1**	**N**	**PEC**
WRITEBACK	**N - 3**	**N - 2**	**N - 1**	**N**

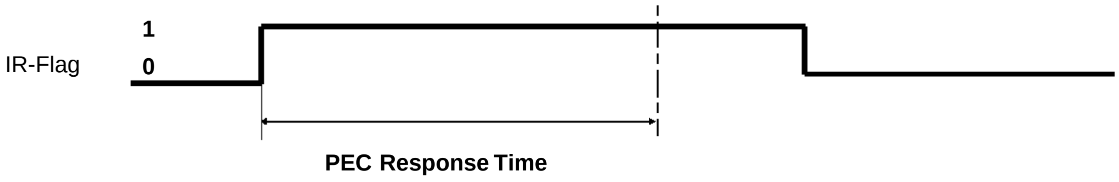

PEC is equivalent **to MOV/B [DSTPx],[SRCPx]**
or MOV/B [DSTPx+],[SRCPx]
or MOV/B [DSTPx],[SRCPx+] **x=(0 . . 7)**

Once per instruction cycle, all enabled interrupt sources whose interrupt request flags have been set during the previous cycle compete for service in a round of prioritization. In the next cycle, the PEC data transfer is started when the winning source was programmed for PEC service, and the source's interrupt request flag is reset to '0'. Note that when instruction N reads any of the PEC control registers PECC0 through PECC7 while a PEC request wins the current round of prioritization, this round is repeated and the PEC data transfer is started one cycle later.

The minimum PEC response time is 3 states (150ns at 40MHz). This applies to program execution from the internal ROM when no external operand read requests are performed, and when the interrupt request flag is set during the last state of an instruction cycle. When the request flag was set during the first state of an instruction cycle, the PEC response time is 4 state times.

When internal hold conditions between instruction pairs N-2/N-1 or N-1/N occur, the minimum PEC response time may be extended by 1 state time for each hold condition. When instruction N reads an operand from the internal ROM, or when N is a call, return, trap, or MOV Rn, [Rm+#data16] instruction, the minimum PEC response time may additionally be extended by 2 state times during internal ROM program execution. In case instruction N reads the PSW and instruction N-1 has an effect on the condition flags, the PEC response time may additionally be extended by 2 state times. The worst case PEC response time during internal ROM program execution is 9 state times (350ns at 40MHz).

The absolute worst case PEC response time will occur when instructions N and N+1 are executed out of an external memory and both require external operand read accesses, and instructions N-3 through N-1 write back external operands. In this case, the PEC response time is the time to perform 7 word bus accesses. Note that this worst case situation is rather untypical and occurs only when instructions N and N-1 are indirect MOV instructions between two external memory locations.

When instructions N and N+1 are executed out of an external memory, but all operands for instructions N-3 through N-1 are in internal memory, then the PEC response time is the time to perform 1 word bus access plus 2 state times.

Once a request for PEC service has been acknowledged by the CPU, the execution of the next instruction is delayed by 2 state times plus the additional time it might take to fetch the source operand from internal ROM or external memory and to write the destination operand over the external bus in an external program environment.

7.2.7 External Interrupts

Nineteen of the ST10x166's port pins may be used as universal external interrupt input pins if their alternate function is not required in conjunction with an on-chip peripheral. These pins are listed in table below .

Table 7-5. Port Pins Configurable As External Interrupt Input Pins

Port Pin	Alternate Symbol	Alternate Function
P2.0	**CC0IO**	**CAPCOM Register 0 Capture Input/Compare Output**
:	:	: :
P2.15	**CC15IO**	**CAPCOM Register 15 Capture Input/Compare Output**
P3.2	**CAPIN**	**CAPREL Register Capture Input**
P3.5	**T4IN**	**Timer 4 Count/Gate/Reload/Capture Input**
P3.7	**T2IN**	**Timer 2 Count/Gate/Reload/Capture Input**

For each of these pins, either a positive, a negative, or both a positive and a negative external transition can be selected to cause an interrupt or PEC service request. The edge selection is performed in the control register of the peripheral device associated with the respective port pin. The peripheral must be programmed to a specific operating mode to allow generation of an interrupt by the external signal. The priority of the interrupt request is determined by the interrupt control register of the respective peripheral interrupt source, and the interrupt vector of this source will be used in case an interrupt is acknowledged.

In order to use any of the pins listed in Table 7.5 as external interrupt inputs, its direction control bit DPx.y in the corresponding port direction control register DPx must be '0'.

When port pins CCxIO/P2.x (x=0 through 15) are to be used as external interrupt input pins, bit field CCMODx in the control register of the corresponding capture/compare register CCx must be configured for capture mode. When CCMODx is programmed to 001b, the interrupt request flag CCxIR in register CCxIC will be set on a positive external transition at pin CCxIO/P2.x. When CCMODx is programmed to 010b, a negative external transition will set the interrupt request flag. When CCMODx=011b, both a positive and a negative transition will set the request flag. In all three cases, the contents of the allocated CAPCOM timer T0 or T1 will be latched into capture register CCx, independent whether the timer is running or not. When the interrupt enable bit CCxIE is set, a PEC request or an interrupt request for vector CCxINT will be generated. For further details on the CAPCOM unit, see section 8.1.

Pins T2IN/P3.7 or T4IN/P3.5 can be used as external interrupt input pins when the associated auxiliary timer T2 or T4 in block GPT1 is configured for capture mode. This mode is selected by programming the mode control fields T2M or T4M in control registers T2CON or T4CON to 101b. The active edge of the external input signal is determined by bit fields T2I or T4I. When these fields are programmed to X01b, interrupt request flags T2IR or T4IR in registers T2IC or T4IC will be set on a positive external transition at pins T2IN/P3.7 or T4IN/P3.5, respectively. When T2I or T4I are programmed to X10b, then a negative external transition will set the corresponding request flag. When T2I or T4I are programmed to X11b, both a positive and a negative transition will set the request flag. In all three cases, the contents of the core timer T3 will be captured into the auxiliary timer registers T2 or T4 based on the transition at pins T2IN or T4IN. When the interrupt enable bits T2IE or T4IE are set, a PEC request or an interrupt request for vector T2INT or T4INT will be generated. For further details on the GPT1 block, see section 8.2.

Pin CAPIN/P3.2 differs slightly from the other pins described before in that it can be used as external interrupt input pin without affecting peripheral functions. When the capture mode enable bit T5SC in register T5CON is set to '0', signal transitions on pin CAPIN/P3.2 will only set the interrupt request flag CRIR in register CRIC, and the capture function of register CAPREL is not activated. This means that register CAPREL can still be used as reload register for GPT2 timer T5 while pin CAPIN/P3.2 is used as external interrupt input.

Through bit field CI in register T5CON, the effective transition of the external interrupt input signal can be selected. When CI is programmed to 01b, a positive external transition will set the interrupt request flag. CI=10b selects a negative transition to set the interrupt request flag, and with CI=11b, both a positive and a negative transition will set the request flag. When the interrupt enable bit CRIE is set, an interrupt request for vector CRINT or a PEC request will be generated. See section 8.2.2 for further details on the GPT2 block.

The non-maskable interrupt input pin $\overline{\text{NMI}}$ provides another possibility to obtain CPU reaction on an external input signal. The $\overline{\text{NMI}}$ pin is a dedicated input pin which causes a hardware trap when a negative transition is detected on this pin. The $\overline{\text{NMI}}$ trap function is discussed in detail in the following section.

7.3 TRAP FUNCTIONS

The ST10x166 provides two different kinds of trapping mechanisms. These are software traps and hardware traps. Trap functions offer the possibility to bypass the interrupt system's prioritization process in cases where immediate system reaction is required. Trap functions are not maskable and always have priority over interrupt requests on any priority level.

7.3.1 Software Traps

The TRAP instruction is used to cause a software call to an interrupt service routine. Associated with the trap instruction is a trap number that can be specified in the operand field of the instruction. This trap number determines which vector location in the memory space from 0h through 1FCh will be branched to (see also table 7.2 in section 7.1.).

Executing a TRAP instruction causes a similar effect as if an interrupt at the same vector had occured. The IP and PSW, and in segmentation mode also the CSP, are pushed on the internal system stack and a jump is taken to the specified vector location. When segmentation is enabled and a trap is executed, the CSP for the trap service routine is set to code segment 0. However, the CPU Priority field of the PSW is not modified and the trap service routine is executed on the priority level from which it was invoked. Therefore, the service routine entered by the TRAP instruction can be interrupted by other traps or higher priority interrupts. No Interrupt Request flags are affected by the TRAP instruction. The interrupt service routine called by a TRAP instruction must be terminated with a RETI (return from interrupt) instruction to ensure correct return.

7.3.2 Hardware Traps

Hardware traps are used to identify faults or specific system states at runtime which cannot be identified at assembly time. Eight different hardware trap functions are supported by the ST10x166. When a hardware trap condition has been detected, the CPU branches to the trap vector location for the respective trap condition. Depending on the trap condition, the instruction which caused the trap is either completed or cancelled (i.e., it has no effect on the system state) before the trap handling routine is entered.

Hardware traps are non-maskable and always have priority over every other CPU activity. If several hardware trap conditions are detected within the same instruction cycle, the highest priority trap is selected for servicing according to table 7.2 in section 7.1.

Whenever a trap occurs, the PSW, the IP, and in segmentation mode also the CSP, are pushed on the system stack. The CPU priority field of the PSW of the trap service routine is set to the highest possible priority level (i.e., level 15), thus disabling all interrupts. The CSP is set to code segment zero if segmentation is enabled. The trap service routine must be terminated with the RETI instruction.

The eight hardware trap functions of the ST10x166 are divided into two classes, class A and B. The traps of class A are the external Non-Maskable Interrupt ($\overline{\text{NMI}}$), the Stack Overflow, and the Stack Underflow trap. All of these traps have the same trap priority, but each of them has a separate vector address.

The traps of class B are the following:

- Undefined Opcode Trap
- Protection Fault Trap
- Illegal Word Operand Access Trap
- Illegal Instruction Access Trap
- Illegal External Bus Access Trap

These trap functions all share the same trap priority and vector address.

In order to allow a trap service routine to identify the kind of trap which caused the exception, a bit-addressable Special Function Register, the Trap Flag Register (TFR), is provided. The configuration of this register is shown next page.

For each trap function, a separate request flag is implemented. When a hardware trap occurs, the corresponding request flag in the TFR register is set to '1'. It must be reset by software in the trap service routine, otherwise a new trap will be requested after exiting the service routine. Setting a trap request flag by software causes the same effects as if it had been set by hardware.

After the reset functions which have highest system priority (trap priority III), the traps of class A have the second highest priority (trap priority II). A class A trap can interrupt a class B trap, but not another class A trap. If more than one of the class A traps occurs at a time, an internal hardware prioritization takes place. The NMI trap has the highest, the stack underflow trap the lowest priority.

The traps of class B all have the same trap priority (trap priority I), which is lower than the priority of class A traps. Thus, class B traps can never interrupt class A traps; but pending class B traps will be executed after all class A traps are finished. In the case of simultaneously occurring class B traps, the corresponding flags in the TFR register are set and the trap service routine is entered. Since all class B traps have the same vector, the priority of service of simultaneously occurring class B traps is determined by software in the trap service routine.

TFR **(FFACh / D6h)**

Trap Flag Register TFR

Reset Value : 0000h

15	14	13	12	11	10	9	8
NMI	STKOF	STKUF	R				

7	6	5	4	3	2	1	0
UNDOPC	R			PRTFLT	ILLOPA	ILLINA	ILLBUS

b15 = NMI: **External non-Maskable Interrupt Trap request flag.**
Set when a negative transition is detected at the $\overline{\text{NMI}}$ pin. Must be reset by software.

b14 = STKOF: **Stack Overflow Trap request flag.**
Set when the stack pointer value is less than the contents of the Stack Overflow (STKOV) register. Must be reset by software.

b13 = STKUF: **Stack Underflow Trap request flag.**
Set when the stack pointer value is greater than the contents of the Stack Underflow (STKUV) register. Must be reset by software.

b12 to b8 and b6 to b4 = R: **Reserved.**

b7 = UNDOPC: **Undefined Opcode Trap request flag.**
Set when the opcode of the instruction currently in decode is not a valid ST10x166 opcode. Must be reset by software.

b3 = PRTFLT: **Protection Fault Trap request flag.**
Set when an illegal format of a protected instruction is detected. Must be reset by software.

b2 = ILLOPA: **Illegal Word Operand Access Trap request flag.**
Set when a word operand read or write access is made to an odd byte address. Must be reset by software.

b1 = ILLINA: **Illegal Instruction Access Trap request flag.**
Set when a branch is made to an odd byte address. Must be reset by software.

b0 = ILLBUS: **Illegal External Bus Access Trap request flag.**
Set when an external access is requested and no external bus is configured. Must be reset by software.

A class A trap occurring during the execution of a class B trap service routine will be serviced immediately. During the execution of a class A trap service routine, however, any class B trap occurring will not be serviced until the class A trap service routine has finished. Thus, in this case, the occurrence of the class B trap is stored in the TFR register, but the IP value of the instruction which caused this trap is lost.

In the case where e.g. an Undefined Opcode trap occurs simultaneously with an NMI trap, both the NMI and the UNDOPC flag is set, the IP of the instruction with the undefined opcode is pushed onto the system stack, but the NMI trap is executed. After return from the NMI service routine, the IP is popped from the stack and immediately pushed again because of the pending UNDOPC trap.

7.3.2.1 EXTERNAL NMI TRAP

Whenever a high to low transition on the dedicated external $\overline{\text{NMI}}$ pin (Non-Maskable Interrupt) is detected, the NMI flag in register TFR is set and the CPU will enter the External NMI trap routine. The IP value pushed on the system stack is the address of the instruction following the one after which normal processing was interrupted by the NMI trap.

7.3.2.2 STACK OVERFLOW TRAP

Whenever the Stack Pointer value is decremented to a value which is less than the value in the Stack Overflow register STKOV, the STKOF flag is set in the TFR register and the Stack Overflow trap is entered. Which IP value will be pushed onto the system stack depends on which operation caused the decrement of the SP. When an implicit decrement of the SP is made through a Push or Call instruction, or upon interrupt or trap entry, the IP value pushed is the address of the following instruction. When the SP is decremented by a Subtract instruction, the IP value pushed represents the address of the instruction after the instruction following the Subtract instruction.

For recovery from stack overflow it must be ensured that there is enough excess space on the stack for twice saving the current system state (PSW, IP, in segmented mode also: CSP). Otherwise, a system reset should be generated. See chapter 13 for more details on stack usage.

7.3.2.3 STACK UNDERFLOW TRAP

Whenever the Stack Pointer is incremented to a value which is greater than the value in the Stack Underflow register STKUN, the STKUF flag is set in the TFR register and the Stack Underflow trap is entered. Again, which IP value will be pushed onto the system stack depends on which operation caused the increment of the SP. When an implicit increment of the SP is made through a Pop or Return instruction, the IP value pushed is the address of the following instruction. When the SP is incremented by an Add instruction, the IP value pushed represents the address of the instruction after the instruction following the Add instruction. See chapter 13 for more details on stack usage.

7.3.2.4 UNDEFINED OPCODE TRAP

Whenever the opcode of an instruction currently decoded by the CPU is not the opcode of a valid instruction in the ST10x166's instruction set, the UNDOPC flag is set in the TFR register and the CPU enters the Undefined Opcode trap. The IP value pushed onto the system stack is the address of the instruction that caused the trap. This can be used to emulate unimplemented instructions. The trap service routine can examine the faulting instruction to decode operands for unimplemented opcodes based on the stacked IP. In order to resume processing, the stacked IP value must be incremented by the size of the undefined instruction which is determined by the user, before a RETI instruction is executed.

7.3.2.5 PROTECTION FAULT TRAP

Whenever one of the special protected instructions is executed where the opcode of that instruction is not repeated twice in the second word of the instruction and the byte following the opcode is not the complement of the opcode, the PRTFLT flag in the TFR register is set and the Protection Fault Trap is entered. The protected instructions include DISWDT, EINIT, IDLE, PWRDN, SRST, and SRVWDT. The IP value pushed onto the system stack for the protection fault trap is the address of the instruction that caused the trap.

7.3.2.6 ILLEGAL WORD OPERAND ACCESS TRAP

Whenever a word operand read or write access is made to an odd byte address, the ILLOPA flag is set and the Illegal Word Operand Access trap is entered. The IP value pushed onto the system stack is the address of the instruction following the one which caused the trap.

7.3.2.7 ILLEGAL INSTRUCTION ACCESS TRAP

Whenever a branch is made to an odd byte address, the ILLINA flag is set in the TFR register and the Illegal Instruction Access trap is entered. The IP value pushed onto the system stack is the illegal odd target address of the branch instruction.

7.3.2.8 ILLEGAL EXTERNAL BUS ACCESS TRAP

Whenever the CPU requests an external instruction or data fetch, and no external bus configuration has been specified in the BTYP field of the SYSCON register, the ILLBUS flag in the TFR register is set and the Illegal Bus Access trap is entered. The IP value pushed onto the system stack is the address of the instruction following the one which caused the trap.

NOTES :

CHAPTER 8

PERIPHERALS

8. PERIPHERALS

This chapter provides a description of the functionality and programming of the peripherals incorporated in the ST10x166. Each of the peripheral units is discussed in a separate section: the CAPCOM unit in section 8.1, the General Purpose Timers (GPT) in section 8.2, the A/D Converter in section 8.3, the Serial Channels in section 8.4, and the Watchdog Timer in section 8.5.

Peripheral Interfaces

The peripherals generally have two different types of interfaces, an interface to the CPU and an interface to external hardware.

Communication between CPU and peripherals is performed through Special Function Registers (SFRs) and interrupts. The SFRs serve as control/status and data registers for the peripherals. Interrupt requests are generated by the peripherals based on specific events (e.g. operation complete, error) which occur during their operation.

For interfacing with external hardware, specific pins of ports P2, P3, or P5 are used when an input or output function has been selected for a peripheral. During this time, the port pins are controlled by the peripheral (when used as outputs) or by the external hardware which controls the peripheral (when used as inputs). This is called the ‘alternate (input or output) function’ of a port pin, in contrast to its function as a general purpose I/O pin.

Each port consists of a port data register and a direction control register (except for port 5 which is an input only port). The name Px (x=0..5) of a port data register is generally used to refer to the whole port Px. For reference to a port pin, the notation Px.y (y=0..15) for the associated bit in the port data register is used as well as the symbol for the alternate function of a port pin.

This chapter about the peripherals will provide all information which is necessary to use the alternate functions of a port in conjunction with a peripheral. A detailed description of the internal port structure will be given in chapter 10 (Parallel Ports).

Peripheral Timing

Internal operation of CPU and peripherals is based on the oscillator frequency (f_{osc}) divided by 2. The resulting frequency is referred to as ‘system clock’. The basic time unit for internal operation of a chip is commonly called ‘state time’. For the ST10x166, one state is defined as 2 periods of the oscillator frequency. When a 40MHz oscillator is used, the internal system clock is 20MHz, and 1 state lasts for 50ns.

The clock which is gated to the peripherals is independent from the CPU clock. During Idle mode, the CPU clock is stopped while the peripherals continue their operation. Peripheral SFRs may be accessed by the CPU on ceper state. When an SFR is written to by software in the same state where it is also to be modified by the peripheral, the software write operation has priority. Further details on peripheral timing are included in the specific sections about each peripheral.

Programming Hints

(1) All SFRs reside in data page 3 of the memory space. Whenever SFRs are to be accessed through indirect or direct addressing with 16-bit (mem) addresses, it must be guaranteed that data page 3 is selected by one of the data page pointer registers DPP0 through DPP3.

This is not required for accessing SFRs via short 8-bit (reg) addressing or via the Peripheral Event Controller (PEC), because in these cases the data page pointers are not used.

(2) Byte write operations to word wide SFRs via indirect or direct 16-bit (mem) addressing or byte transfers via the PEC force zeros in the non-addressed byte. Byte write operations via short 8-bit (reg) addressing can only access the low byte of an SFR and force zeros in the high byte. It is therefore recommended to use the bit field instructions (BFLDL and BFLDH) to write to any number of bits in either byte of an SFR without disturbing the non-addressed byte and the unselected bits.

(3) Some of the bits which are contained in the ST10x166's SFRs are marked as 'reserved'. User software should never write '1's to reserved bits. These bits are currently not implemented and may be used in future ST10x166 family products to invoke new functions. In this case, the active state for these functions will be '1', and the inactive state will be '0'. In the ST10x166, the value read from reserved bits is 0.

8.1 CAPTURE/COMPARE (CAPCOM) UNIT

The CAPCOM unit supports generation and control of timing sequences on up to 16 channels with a minimum of software intervention. The CAPCOM unit is typically used to handle high speed I/O tasks such as pulse and waveform generation, pulse width modulation, or recording of the time at which specific events occur, and it also allows the implementation of up to 16 software timers. The maximum resolution of the CAPCOM unit is 400ns (at 40MHz oscillator frequency).

CAPCOM **Block Diagram**

The CAPCOM unit consists of two 16-bit timers (T0 and T1), each with its own reload register (T0REL and T1REL), and a bank of sixteen dual purpose 16-bit capture/compare registers (CC0 through CC15).

The input clock for T0 or T1 is programmable to several prescaled values of the system clock, or it can be derived from an overflow/underflow of timer T6 in block GPT2. T0 may also operate in counter mode allowing it to be clocked by an external event.

Each capture/compare register may be programmed individually for capture or compare function, and each register may be allocated to either timer T0 or T1. Each capture/compare register has one pin of port 2 associated with it which serves as an input pin for the capture function or as an output pin for the compare function.

The capture function causes the current timer contents to be latched into the capture/compare register based on an external event on its associated port 2 pin. The compare function may cause an output signal transition on that port 2 pin whose associated capture/compare register matches the current timer contents. Specific interrupt requests are generated up on each capture/ compare event or upon timer overflow. Figure 8.1 shows a block diagram of the CAPCOM unit.

Register Overview

From the programmer's point of view, the term 'CAPCOM unit' refers to a set of SFRs which are associated with this peripheral, including the port pins which may be used for alternate input/output functions. As can be seen from Figure 8.2, for each pin (e.g. P3.0) within a port there is a direction control bit (e.g. DP3.0) within the associated port direction control register (e.g. DP3). In this figure, those portions of port and direction registers which are not used by the CAPCOM unit for alternate functions are not shaded.

Figure 8-1. CAPCOM Unit Block Diagram

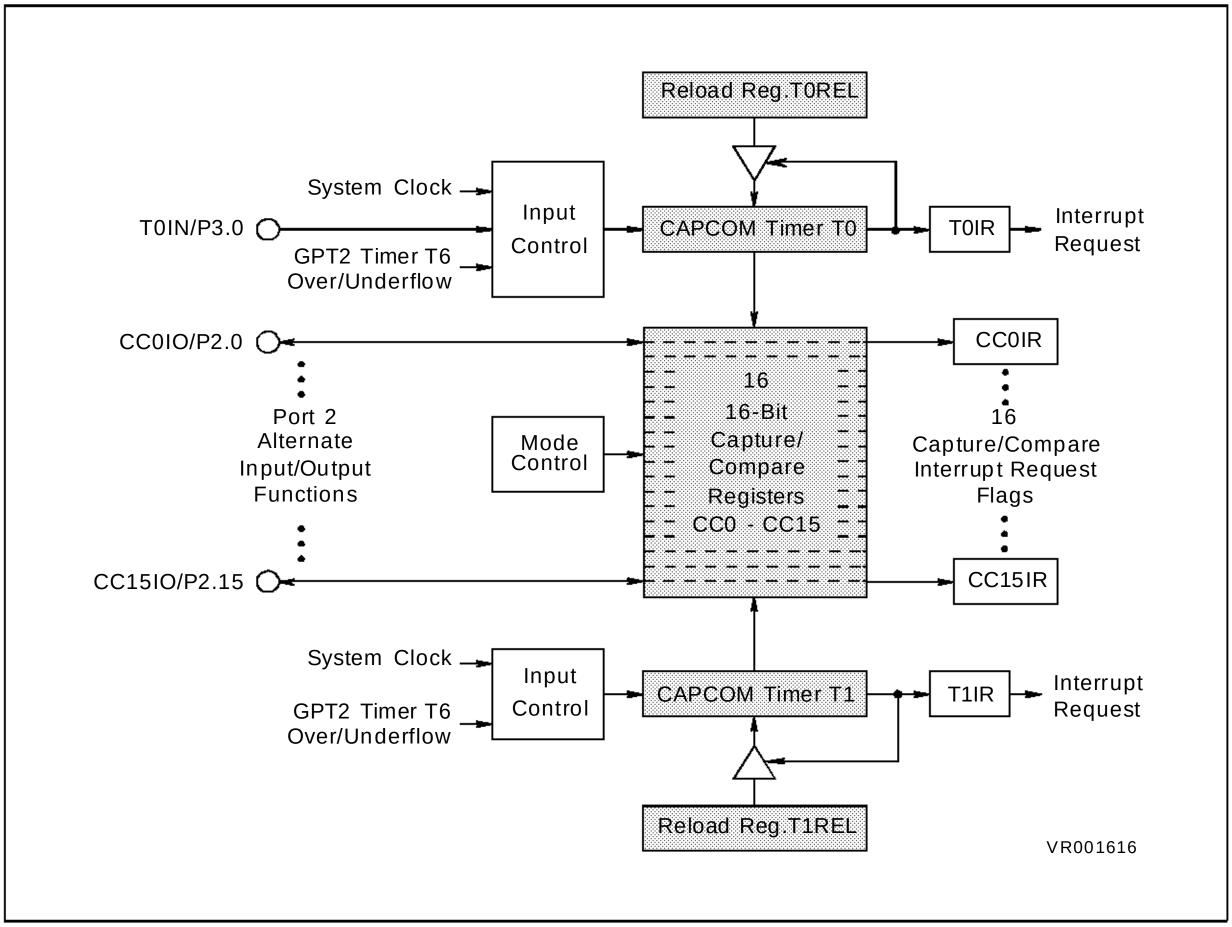
Reload Reg.T0REL
System Clock
T0IN/P3.0
GPT2 Timer T6
Over/Underflow
Input
Control
CAPCOM Timer T0
T0IR
Interrupt
Request
CC0IO/P2.0
Port 2
Alternate
Input/Output
Functions
CC15IO/P2.15
Mode
Control
16
16-Bit
Capture/
Compare
Registers
CC0 - CC15
CC0IR
16
Capture/Compare
Interrupt Request
Flags
CC15IR
System Clock
GPT2 Timer T6
Over/Underflow
Input
Control
CAPCOM Timer T1
T1IR
Interrupt
Request
Reload Reg.T1REL
VR001616

Figure 8-2. SFRs and Port Pins Associated with the CADCON Unit

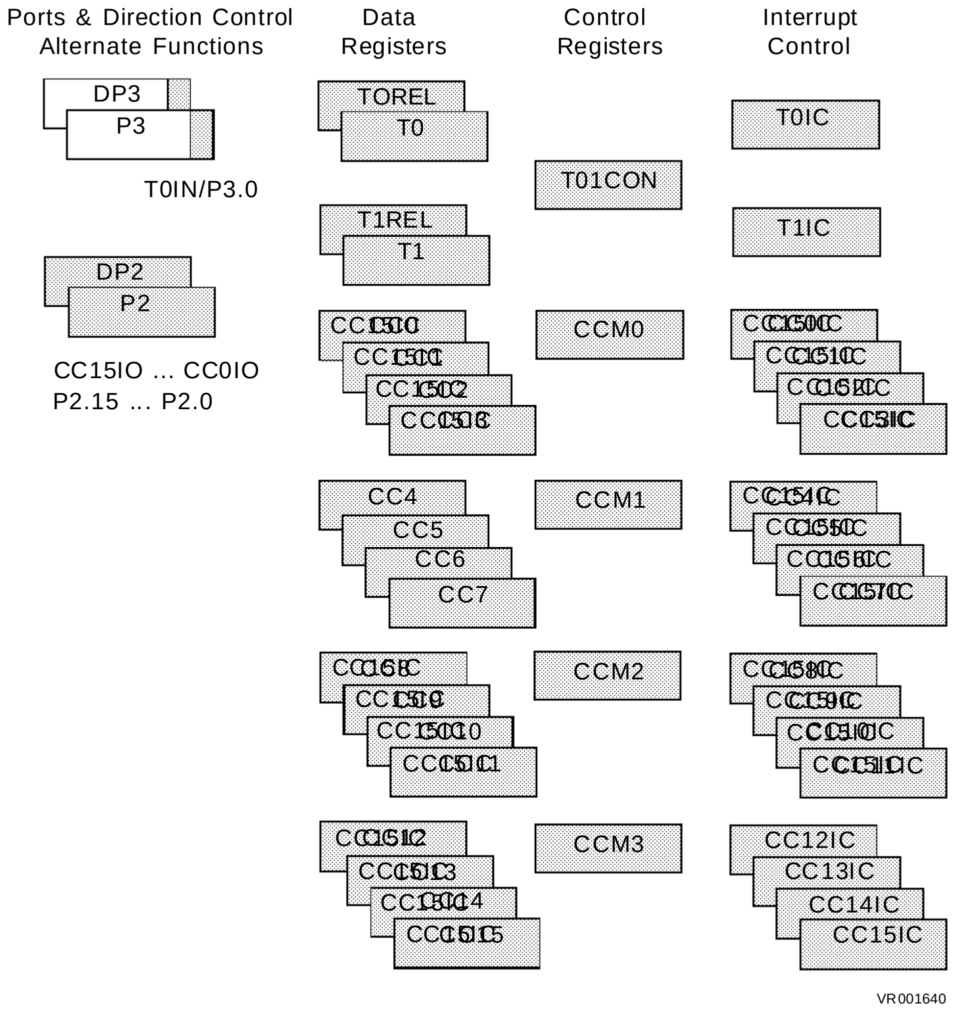
Ports & Direction Control
Alternate Functions
Data
Registers
Control
Registers
Interrupt
Control
DP3
P3
T0IN/P3.0
DP2
P2
CC15IO ... CC0IO
P2.15 ... P2.0
T0REL
T0
T1REL
T1
CC0
CC1
CC2
CC3
CC4
CC5
CC6
CC7
CC8
CC9
CC10
CC11
CC12
CC13
CC14
CC15
T01CON
CCM0
CCM1
CCM2
CCM3
T0IC
T1IC
CC0IC
CC1IC
CC2IC
CC3IC
CC4IC
CC5IC
CC6IC
CC7IC
CC8IC
CC9IC
CC10IC
CC11IC
CC12IC
CC13IC
CC14IC
CC15IC
VR001640

DP3	**Port 3 Direction Control Register**
P3	**Port 3 Data Register**
DP2	**Port 2 Direction Control Register**
P2	**Port 2 Data Register**
T0	**CAPCOM Timer 0 Register**
T0REL	**CAPCOM Timer 0 Reload Register**
T1	**CAPCOM Timer 1 Register**
T1REL	**CAPCOM Timer 1 Reload Register**
CC0 .. CC15	**CAPCOM Registers 0 .. 15**
T01CON	**CAPCOM Timer 0 and Timer 1 Control Register**
CCM0 .. CCM3	**CAPCOM Mode Control Registers 0 .. 3**
T0IC	**CAPCOM Timer 0 Interrupt Control Register**
T1IC	**CAPCOM Timer 1 Interrupt Control Register**
CC0IC .. CC15IC	**CAPCOM Register 0 ..15 Interrupt Control Registers**

8.1.1 Timers T0 and T1

The primary use of the timers T0 and T1 is to provide two independent time bases (400ns maximum resolution for the capture/compare registers, but they may also be used independent of the capture/compare registers.

The functions of the timers T0 and T1 are controlled by the bit addressable 16-bit control register T01CON described below. T1 is controlled by the upper byte, and T0 is controlled by the lower byte of T01CON. T0R and T1R are the run flags of T0 and T1, respectively. They allow for enabling and disabling the timers. The following description of the timer modes and operation always applies to the enabled state of the timers, i.e., when both T0R and T1R are set to '1'.

T01CON **(FF50h / A8h)**

CAPCOM Timer 0 and 1 Control Register

Reset Value : 0000h

15	14	13	12	11	10	9	8
R	T1R	R		T1M	T1I		

7	6	5	4	3	2	1	0
R	T0R	R		T0M	T0I		

b15,b13,b12,b7,b5,b4 = R: Reserved.

b14 = T1R: Timer/Counter 1 Run Bit.
If set at '1' will enable the Timer/Counter 1
b11 = T1M: Timer/Counter 1 Mode Selection Bit.
If set at '1' will enable counter mode, otherwise enable timer mode.

b10 to b8 = T1I: Timer/Counter 1 input Selection Bits.
See table 8.1 and 8.2 for more information on the input.

b6 = T0R: Timer/Counter 0 Run Bit.
If set at '1' will enable the Timer/Counter 0.

b3 = T0M: Timer/Counter 0 Mode Selection Bit.
If set at '1' will enable counter mode, otherwise enable timer mode.

b2 to b0 = T0I: Timer/Counter 0 input Selection Bits.
See table 8.1 and 8.2 for more information on the input.

In all modes, both timer T0 and timer T1 are always counting upward. The current timer values are accessible by the CPU in timer registers T0 and T1, which are both non bit addressable SFRs. When T0 or T1 are written by the CPU in the state immediately before a timer increment or reload is to be performed, the CPU write operation has priority, and the increment or reload is disabled to guarantee correct timer operation.

8.1.1.1 TIMER MODE

Bits T0M and T1M in SFR T01CON select between timer or counter mode for T0 or T1, respectively. In timer mode (T0M= '0' or T1M= '0'), the input clock for a timer is derived from the internal system clock divided by a programmable prescaler. The different options for the prescaler are selected separately for T0 and T1 by the bit fields T0I and T1I.

The input frequencies f_{T0} and f_{T1} for T0 and T1 are determined as a function of the oscillator frequency as follows, where <T0I> and <T1I> represent the contents of the bit fields T0I and T1I:

$$f_{T0} = \frac{f_{OSC}}{16 \times 2^{<T0I>}} \quad , \quad f_{T1} = \frac{f_{OSC}}{16 \times 2^{<T1I>}}$$

When a timer overflows from FFFFh to 0000h, it is reloaded with the value stored in its respective reload register T0REL or T1REL. The reload values determine the periods P_{T0} and P_{T1} between two consecutive overflows of T0 and T1 as follows:

$$P_{T0} = \frac{16 \times (\, 2^{16} - <T0REL> \,) \times 2^{<T0I>}}{f_{OSC}}$$

$$P_{T1} = \frac{16 \times (\, 2^{16} - <T1REL> \,) \times 2^{<T1I>}}{f_{OSC}}$$

The timer input frequencies, resolution, and periods which result from the selected prescaler option in T0I or T1I when using a 40MHz oscillator are listed in table 8.1. The numbers for the timer periods are based on a reload value of 0000h. Note that some numbers may be rounded to 3 significant digits.

Table 8-1. CAPCOM Timers T0 and T1 Input Frequencies, Resolution and Periods

f_{osc} = 40MHz	Timer Input Selection T01/T1I							
	000b	001b	010b	011b	100b	101b	110b	111b
Prescaler for f_{osc}	**16**	**32**	**64**	**128**	**256**	**512**	**1024**	**2048**
Input Frequency	**2.5MHz**	**1.25MHz**	**625kHz**	**312.5kHz**	**156.25kHz**	**78.125kHz**	**39.06kHz**	**19.53kHz**
Resolution	**400ns**	**800ns**	**1.6µs**	**3.2µs**	**6.4µs**	**12.8µs**	**25.6µs**	**51.2µs**
Period	**26ms**	**52.5ms**	**105ms**	**210ms**	**420ms**	**840ms**	**1.68s**	**3.36s**

After a timer has been started by setting its run flag (T0R or T1R) to ‘1’, the first increment will occur within the time interval which is defined by the selected timer resolution. All further increments occur exactly after the time defined by the timer resolution. When both timers are to be incremented or reloaded at the same time, T0 is always serviced one state before T1.

8.1.1.2 COUNTER MODE

Counter mode is selected for timer T0 or T1 by setting the appropriate mode selection bit (T0M or T1M) in register T01CON to ‘1’. Both timers can operate in counter mode by counting the overflows/underflows of timer T6 in block GPT2 (see section 8.2.2 for details on GPT2). In addition, timer T0 offers the capability of being clocked by external events. Either a positive, a negative, or both a positive and a negative transition at pin T0IN (alternate input function of port pin P3.0) can be selected to cause an increment of T0.

When T1 is programmed to run in counter mode (T1M= ‘1’), bit field T1I is used to enable the overflows/underflows of timer T6 as the count source for T1. This is the only option for T1, and it is selected by the combination T1I=X00b. When bit field T1I is programmed to other combinations, timer T1 stops.

When T0 is programmed to run in counter mode (T0M= ‘1’), bit field T0I is used to select the count source and transition which should cause a count trigger for T0. Table 8.2 shows the possible selections for the counter mode of timers T0 and T1.

In order to use pin P3.0/T0IN as external count input pin for T0, P3.0 must be configured as input, i.e., the corresponding direction control bit DP3.0 in register DP3 must be set to ‘0’. If P3.0/T0IN is configured as output, timer T0 may be clocked by modifying port data register bit P3.0 through software, e.g. for testing purposes.

The maximum external input frequency to T0 in counter mode is f_{OSC} /16 (1.25MHz at 40MHz f_{OSC}). To ensure that a signal transition is properly recognized, an external count input signal should be held for at least 8 state times before it changes its level again. The incremented count value appears in SFR T0 within 8 state times after the signal transition at pin T0IN.

TABLE 8-2. Input Selection for T0 and T1 in Counter Mode

Counter T0 is incremented on	T0I/T1I			Counter T1 is incremented on
	(2)	(1)	(0)	
Overflow or Underflow of GPT2 Timer T6	**X**	**0**	**0**	**Overflow or Underflow of GPT2 Timer T6**
Positive External Transition at Pin T0IN	**X**	**0**	**1**	**(Counter T1 stops)**
Negative External Transition at Pin T0IN	**X**	**1**	**0**	**(Counter T1 stops)**
Positive and Negative Transition at T0IN	**X**	**1**	**1**	**(Counter T1 stops)**

8.1.1.3 RELOAD

A reload of a timer with the 16-bit value stored in its associated reload register is performed in timer mode as well as in counter mode each time a timer overflows from FFFFh to 0000h. The reload registers T0REL and T1REL are not bit-addressable.

8.1.1.4 TIMER T0 AND T1 INTERRUPTS

Upon timer overflow, the corresponding timer interrupt request flag T0IR or T1IR for the respective timer will be set. This flag can be used to generate an interrupt or trigger a PEC service request when enabled by the interrupt enable bits T0IE or T1IE.

Each of the two timers (T0 or T1) has its own bit-addressable interrupt control register (T0IC or T1IC) and its own interrupt vector (T0INT or T1INT). The organization of the interrupt control registers T0IC and T1IC is described hereafter. Refer to chapter 7 for more details on the interrupt control registers.

T0IC **(FF9Ch / CEh)**

CAPCOM Timer T0 Interrupt Control Registers T0IC

Reset Value :0000h

7	6	5	4	3	2	1	0
T0IR	T0IE	ILVL				GLVL	

b7 = T0IR: **Timer 0 Interrupt Request Bit.**
This flag can be used to generate an interrupt or trigger a PEC service request.

b6 = T0IE: **Timer 0 Interrupt Enable Bit.**
If set at '1' will enable the timer 0 interrupt.

b5 to b2 = ILVL: **Interrupt Priority Level Bits.**
See chapter 7 for more details.

b1,b0 = GLVL: **Interrupt Group Priority Bits.**
See chapter 7 for more details.

T1IC **(FF9Eh / CFh)**

CAPCOM Timer T1 Interrupt Control Registers T1IC

Reset Value :0000h

7	6	5	4	3	2	1	0
T1IR	T1IE	ILVL				GLVL	

b7 = T1IR: **Timer 1 Interrupt Request Bit.**
This flag can be used to generate an interrupt or trigger a PEC service request.

b6 = T1IE: **Timer 1 Interrupt Enable Bit.**
If set at '1' will enable the timer 1 interrupt.

b5 to b2 = ILVL: **Interrupt Priority Level Bits.**
See chapter 7 for more details.

b1,b0 = GLVL: **Interrupt Group Priority Bits.**
See chapter 7 for more details.

8.1.1.5 BLOCK DIAGRAM

The following block diagrams illustrate the selection of the available functions for timer T0 and timer T1. Figure 8.3 shows a block diagram of timer T0, while Figure 8.4 shows a block diagram of timer T1.

Figure 8-3. CAPCOM Timer T0 Block Diagram

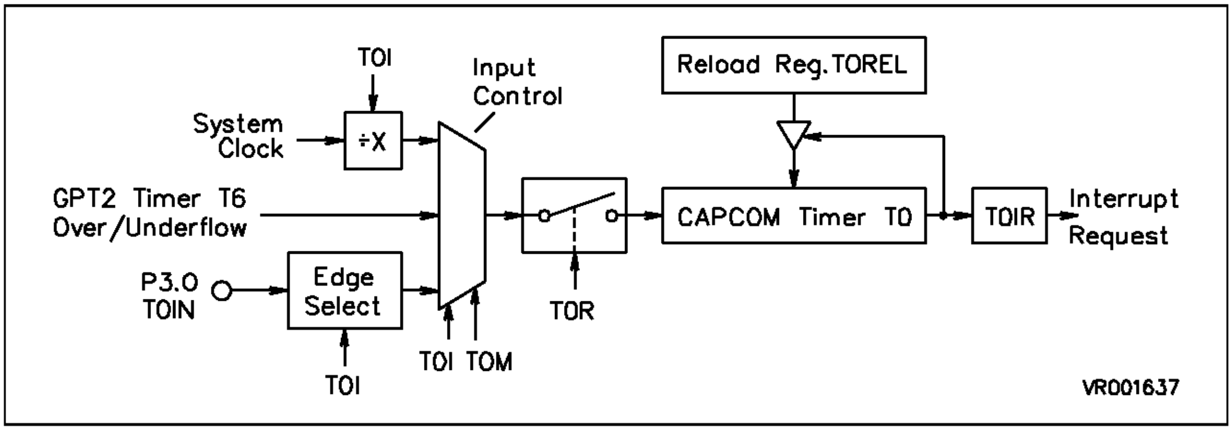
T0I
Input Control
Reload Reg. T0REL
System Clock
÷X
GPT2 Timer T6 Over/Underflow
CAPCOM Timer T0
T0IR
Interrupt Request
P3.0 T0IN
Edge Select
T0I
T0I
T0M
T0R
VR001637

Figure 8-4. CAPCOM Timer T1 Block Diagram

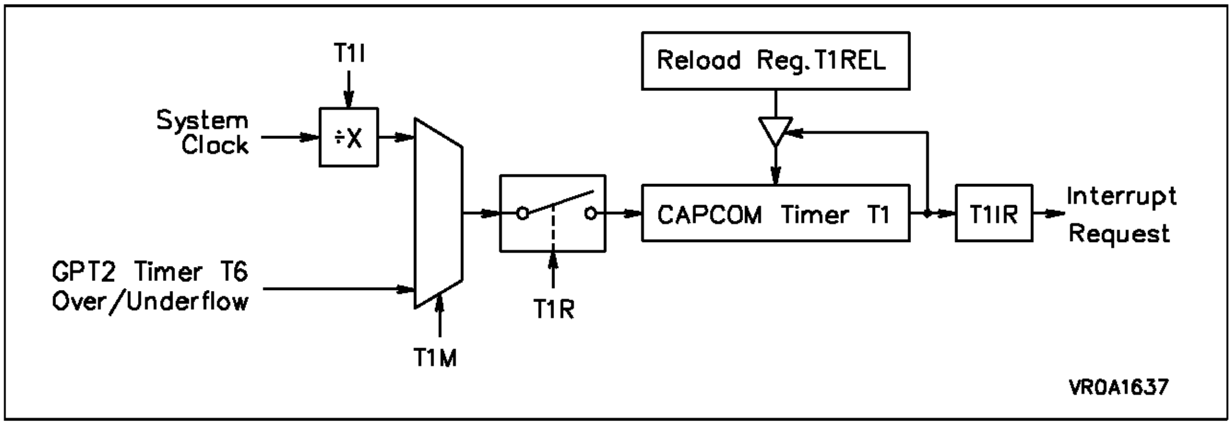
T1I
Reload Reg. T1REL
System Clock
÷X
CAPCOM Timer T1
T1IR
Interrupt Request
GPT2 Timer T6 Over/Underflow
T1R
T1M
VR0A1637

8.1.2 Capture/Compare Registers

The sixteen 16-bit capture/compare registers CC0 through CC15 are used as data registers for capture or compare operations with respect to timer T0 and T1. The capture/ compare registers are not bit-addressable.

Each of the registers CC0 through CC15 may be individually programmed for capture- or one of 4 different compare modes, and may be allocated individually to one of the timers T0 or T1. A special combination of compare modes additionally allows the implementation of a 'double-register' compare mode. When capture or compare operation is disabled for one of the registers, it may be used for general purpose variable storage.

The functions of the 16 capture/compare registers are controlled by 4 bit-addressable 16 bit mode control registers named CCM0, CCM1, CCM2, and CCM3, which are all organized identically. Each register contains bits for the mode selection and timer allocation of four capture/compare registers. The organization of CAPCOM mode control register CCM0, and the organization of CAPCOM mode control registers CCM1, CCM2, and CCM3 are decribed below. As the selection of the individual operating mode is identical for each of the capture/compare registers, only a detailed description of register CCM0 is given. The description for registers CCM1 through CCM3 is identical except for the indices of the respective capture/compare registers.

Table 8.3 lists the possible capture and compare modes which can be programmed for each capture/compare register. The different modes are discussed in detail in the following subsections.

CCM0 **(FF52h / A9h)**

CAPCOM Mode Control Registers CCM0

Reset Value :0000h

15	14	13	12	11	10	9	8
ACC3	CCMOD3			ACC2	CCMOD2		

7	6	5	4	3	2	1	0
ACC1	CCMOD1			ACC0	CCMOD0		

b15 = ACC3: **Capture/Compare Register CC3 Allocation bit.**
If set at '1', allocate CC3 to Timer 1, otherwise allocate CC3 to Timer 0.

b14 to b12 =CCMOD3: **Capture/Compare Register CC3 Mode Selection.**
See Table 8.3.

b11 = ACC2: **Capture/Compare Register CC2 Allocation Bit.**
If set at '1' allocate CC2 to timer 1, otherwise allocate CC2 to timer 0.

b10 to b8 =CCMOD2: **Capture/Compare Register CC2 Mode Selection.**
See Table 8.3.

b7 = ACC1: **Capture/Compare Register CC1 Allocation Bit.**
If set at '1' allocate CC1 to timer 1, otherwise allocate CC1 to timer 0.

b6 to b4 =CCMOD1: **Capture/Compare Register CC1 Mode Selection.**
See Table 8.3.

b3 = ACC0: **Capture/Compare Register CC0 Allocation Bit.**
If set at '1' allocate CC0 to timer 1, otherwise allocate CC0 to timer 0.

b2 to b0 =CCMOD0: **Capture/Compare register CC0 Mode Selection.**
See Table 8.3.

CCM1 **(FF54h / AAh)**

CAPCOM Mode Control Registers CCM1

Reset Value : 0000h

15	14	13	12	11	10	9	8
ACC7	CCMOD7			ACC6	CCMOD6		

7	6	5	4	3	2	1	0
ACC5	CCMOD5			ACC4	CCMOD4		

See description CCM0.

CCM2 **(FF56h / ABh)**

CAPCOM Mode Control Registers CCM2

Reset Value : 0000h

15	14	13	12	11	10	9	8
ACC11	CCMOD11			ACC10	CCMOD10		

7	6	5	4	3	2	1	0
ACC9	CCMOD9			ACC8	CCMOD8		

See description CCM0.

CCM3 **(FF58h / ACh)**

CAPCOM Mode Control Registers CCM3

Reset Value : 0000h

15	14	13	12	11	10	9	8
ACC15	CCMOD15			ACC14	CCMOD14		

7	6	5	4	3	2	1	0
ACC13	CCMOD13			ACC12	CCMOD12		

See description CCM0.

Table 8-3. Capture/Compare Register Mode Selection

CCMODx			Function
(2)	(1)	(0)	
0	**0**	**0**	**Capture / Compare Disabled**
0	**0**	**1**	**Capture on Positive External Transition at Pin CCxIO**
0	**1**	**0**	**Capture on Negative External Transition at Pin CCxIO**
0	**1**	**1**	**Capture on Positive and Negative External Transition at Pin CCxIO**
1	**0**	**0**	**Compare Mode 0: Interrupt only; several interrupts per timer period; enables double-registers compare mode for registers CC8 through CC15**
1	**0**	**1**	**Compare Mode 1: Pin toggles on each match; several compare events per timer period; registers CC0 through CC7 have to be in this mode for double-register compare operate**
1	**1**	**0**	**Compare Mode 2 : Interrupt only; only one interrupt per timer period**
1	**1**	**1**	**Compare Mode 3: Pin set on match; pin reset on timer overflow; only one compare event per timer period**

Note **: x = 0 ..15**

As each of the 16 capture/compare registers CC0 through CC15 can be programmed to any of the available capture or compare modes, these modes will be described in detail in the following only for one representative capture/compare register which is referred to as CCx. The index x may be substituted by any of the indices 0 through 15.

Identically, the Port 2 pin which is associated with register CCx will be referred to as CCxIO, where CCxIO is the alternate function of P2.x. The interrupt request flag which is associated with capture/compare register CCx is referred to as CCxIR, and the allocation and mode control bits for CCx are referred to as ACCx and CCMODx, respectively.

8.1.2.1 CAPTURE MODE

The contents of the timer (T0 or T1, according to the state of the allocation control bit ACCx) are latched into the allocated capture register CCx in response to an external event. The external event causing a capture can be programmed to be either a positive, a negative, or both a positive and a negative transition at the respective external input pin CCxIO.

The active transition is selected by the mode bits CCMODx in the respective CAPCOM mode control register. In any case, the event causing a capture will also set the respective interrupt request flag CCxIR which can cause an interrupt or a PEC service request when enabled.

Figure 8.5 shows a block diagram for one capture/compare register in capture mode.

In order to use pin P2.x/CCxIO as external capture input pin for capture register CCx, P2.x must be configured as input, i.e., the corresponding direction control bit DP2.x in register DP2 must be set to '0'. To ensure that a signal transition is properly recognized, an external capture input signal should be held for at least 8 state times before it changes its level.

During these 8 states, the capture input signals are scanned sequentially. When a timer is modified or incremented during this process, the new timer contents will already be captured for the remaining capture registers within the scanning sequence.

If P2.x/CCxIO is configured as output, the capture function may be performed by modifying port data register bit P2.x through software, e.g. for testing purposes.

Figure 8-5. Capture Mode Block Diagram

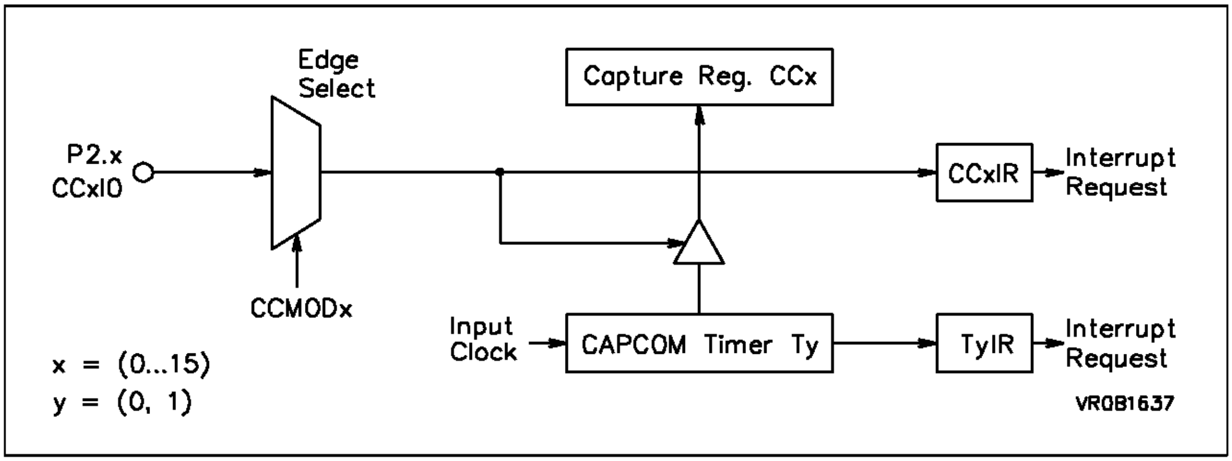

8.1.2.2 COMPARE MODES

The compare modes allow triggering of events with minimum software overhead. In all compare modes, the 16-bit value stored in compare register CCx (in the following also referred to as 'compare value') is continuously compared with the contents of the timer (T0 or T1) to which the register is allocated. If the current timer contents match the compare value, an appropriate output signal which is based on the selected compare mode can be generated at the corresponding Port 2 pin, and an interrupt request is generated by setting the associated interrupt request flag CCxIR.

As for the capture mode, the compare registers are also processed sequentially during compare mode. When any two compare registers are programmed to the same compare value, their corresponding interrupt request flags will be set to '1' and the selected output signals will be generated within 8 state times after the allocated timer is incremented to the compare value. Further compare events on the same compare value are disabled until the timer is incremented or written to by software. After a reset, compare events for register CCx will only become enabled if the allocated timer has been incremented or written to by software and one of the compare modes described in the following has been selected for this register.

The different compare modes which can be programmed for a given compare register CCx are selected by the mode control field CCMODx in the associated capture/compare mode control register (see table 8.3). In the following, each of the compare modes, including the special 'double-register' mode, is discussed in detail.

8.1.2.2.1 Compare mode 0

This is an interrupt-only mode which can be used for software timing purposes. Compare mode 0 is selected for a given compare register CCx by setting bit field CCMODx of the corresponding mode control register to '100b'.

In this mode, interrupt request flag CCxIR is set each time a match is detected between the contents of compare register CCx and the allocated timer. Several of these compare events are possible within a single timer period when the compare value in register CCx is updated during the timer period. The corresponding Port 2 pin P2.x is not affected by compare events in this mode and can be used as a normal I/O pin.

If compare mode 0 is programmed for one of the registers CC8 to CC15, the double-register compare mode becomes enabled for this register if the corresponding bank 1 register is programmed to compare mode 1 (see section 8.1.2.2.5 for details on the double-register mode).

Figure 8.6 shows a functional diagram of a compare register CCx configured for compare mode 0. Note that the port latch and pin remain unaffected in compare mode 0. Figure 8.7 shows a simple timing example for this mode. In this example, the compare value in register CCx is modified from cv1 to cv2 after compare events #1 and #3, and from cv2 to cv1 after events #2 and #4, etc... This results in periodic interrupt requests from timer Ty, and in interrupt requests from register CCx which occur at the time specified by the user through cv1 and cv2.

Figure 8-6. Compare Mode 0 and 1 Block Diagram

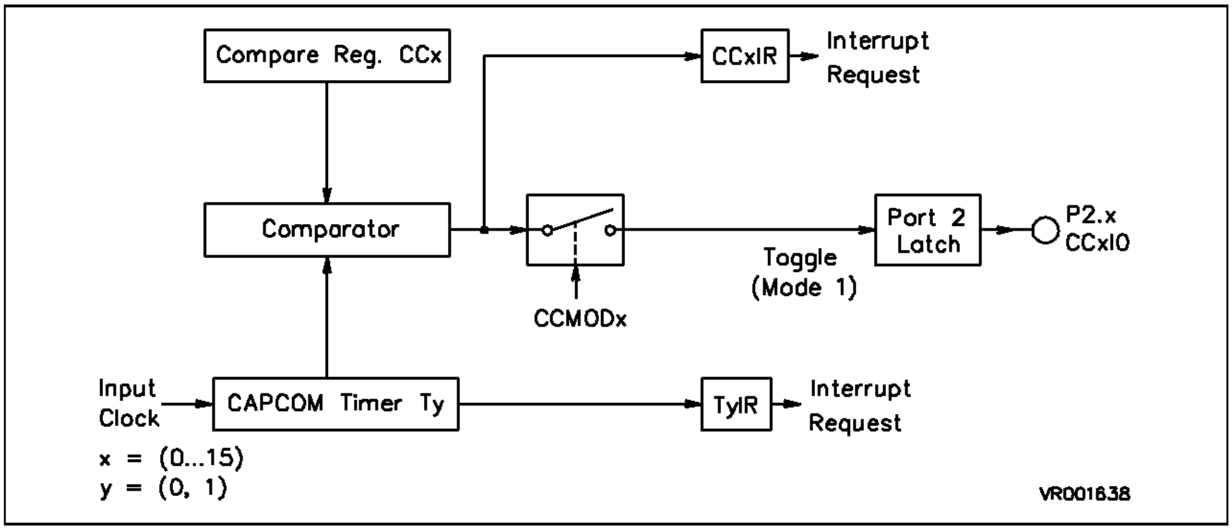

Figure 8-7. Timing Example for Compare Mode 0

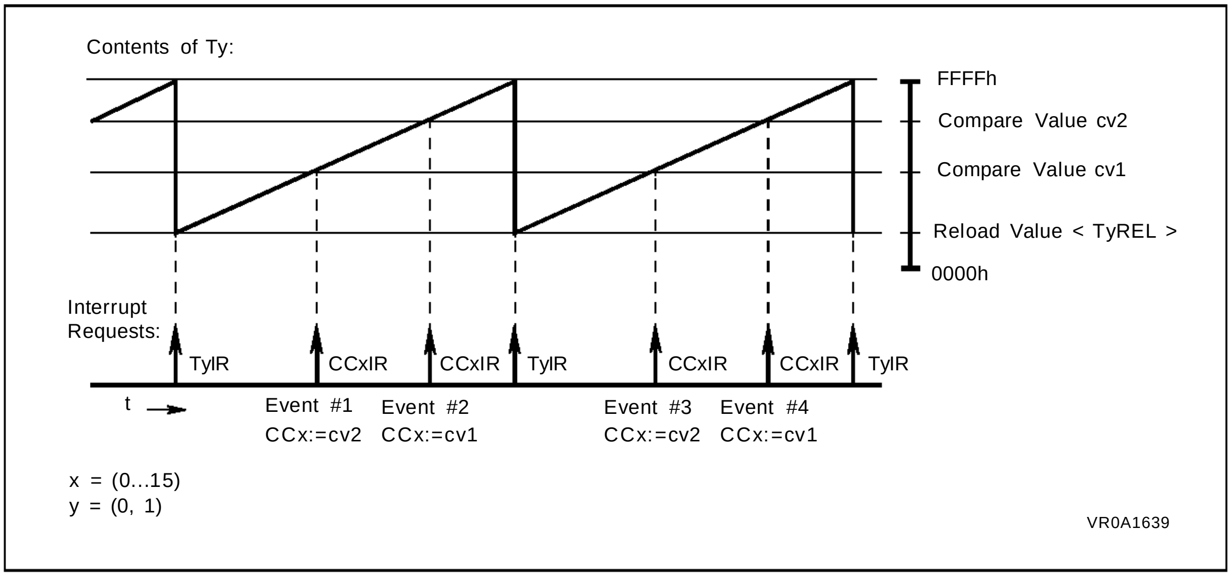
Contents of Ty:
FFFFh
Compare Value cv2
Compare Value cv1
Reload Value < TyREL >
0000h
Interrupt Requests:
TyIR
CCxIR
CCxIR
TyIR
CCxIR
CCxIR
TyIR
t
Event #1
CCx:=cv2
Event #2
CCx:=cv1
Event #3
CCx:=cv2
Event #4
CCx:=cv1
x = (0...15)
y = (0, 1)
VR0A1639

8.1.2.2.2 Compare Mode 1

Compare mode 1 is selected for register CCx by setting bit field CCMODx of the corresponding mode control register to '101b'.

When a match between the contents of the allocated timer and the compare value in register CCx is detected in this mode, interrupt request flag CCxIR is set to '1', but also the corresponding pin CCxIO (alternate output function of Port 2 pin P2.x) is toggled. For this purpose, the state of Port 2 output latch P2.x (not the pin) is read, inverted, and then written back to the output latch.

Compare mode 1 allows several compare events within a single timer period. An overflow of the timer to which compare register CCx is allocated has no effect on pin P2.x, nor does it disable or enable further compare events.

In order to use pin P2.x/CCxIO as compare signal output pin for compare register CCx in compare mode 1, P2.x must be configured as output, i.e., the corresponding direction control bit DP2.x in register DP2 must be set to '1'. With this configuration, the initial state of the output signal can be programmed or its state can be modified at any time by writing to bit latch P2.x. However, if P2.x is written to by software at the same time it would be altered by a compare event, the software write will have priority. In this case, the hardware triggered change will not become effective.

For operation in the double-register compare mode, compare mode 1 must be selected for the registers CC0 to CC7 (see section 8.1.2.2.5 for details on the double register mode).

Figure 8.8 shows the timing example from the previous section, now for compare mode 1. The functional block diagram of a compare register in compare mode 1 is included in figure 8.6 of the previous section. Note that in compare mode 1 the port latch is toggled upon each compare event.

Figure 8-8. Timing Example for Compare Mode 1

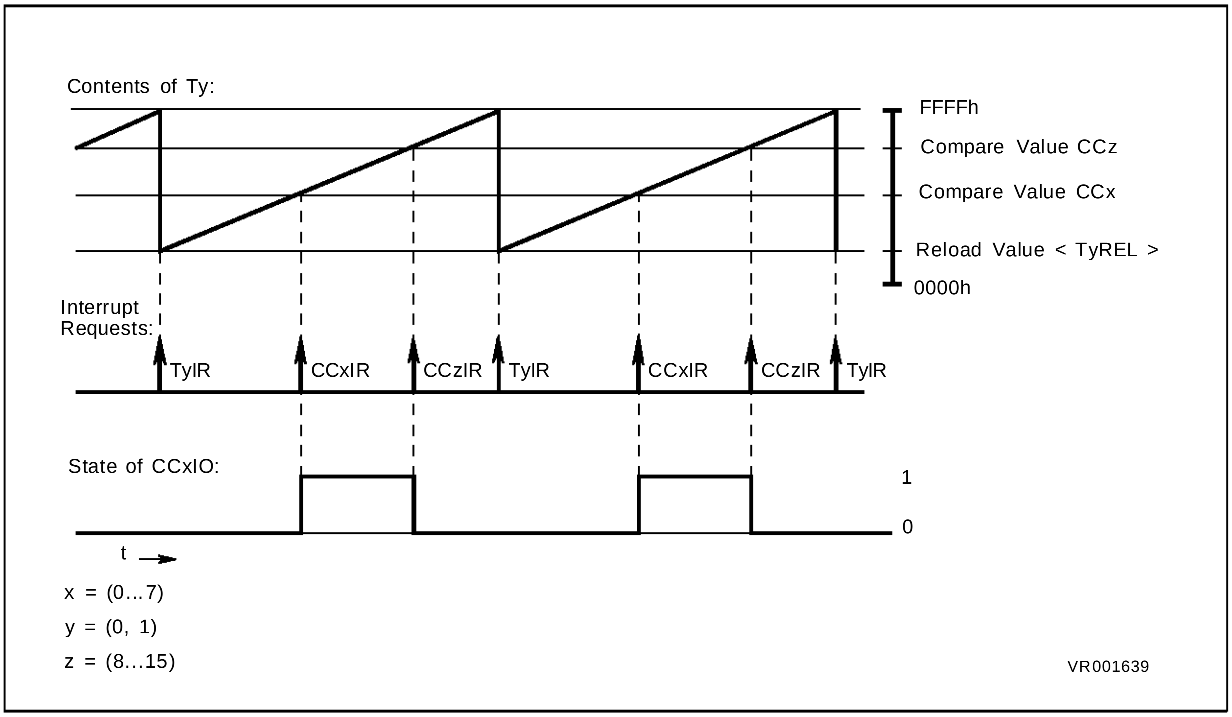
Contents of Ty:
FFFFh
Compare Value CCz
Compare Value CCx
Reload Value < TyREL >
0000h
Interrupt Requests:
TyIR
CCxIR
CCzIR
TyIR
CCxIR
CCzIR
TyIR
State of CCxIO:
1
0
t
x = (0...7)
y = (0, 1)
z = (8...15)
VR001639

8.1.2.2.3 Compare Mode 2

Compare mode 2 is an interrupt-only mode similar to compare mode 0, but only one interrupt request per timer period will be generated. Compare mode 2 is selected for register CCx by setting bit field CCMODx of the corresponding mode control register to ‘110b’.

When a match is detected in compare mode 2 for the first time within a timer period, interrupt request flag CCxIR is set to ‘1’. The corresponding Port 2 pin P2.x is not affected and can be used as a normal I/O pin. However, after the first match has been detected in this mode, all further compare events within the same timer period are disabled for compare register CCx until the allocated timer overflows. This means that, after the first match, even when the compare register is reloaded with a value higher than the current timer value, no compare event will occur until the next timer period.

Figure 8.9 shows a functional diagram of a compare register configured for compare mode 2. Note that the port latch and pin remain unaffected in compare mode 2. Figure 8.10 shows a simple timing example for this compare mode. In this example, the compare value in register CCx is modified from cv1 to cv2 after compare event #1. However, compare event #2 will not occur until the next period of timer Ty.

Figure 8-9. Compare Mode 2 and 3 Block Diagram

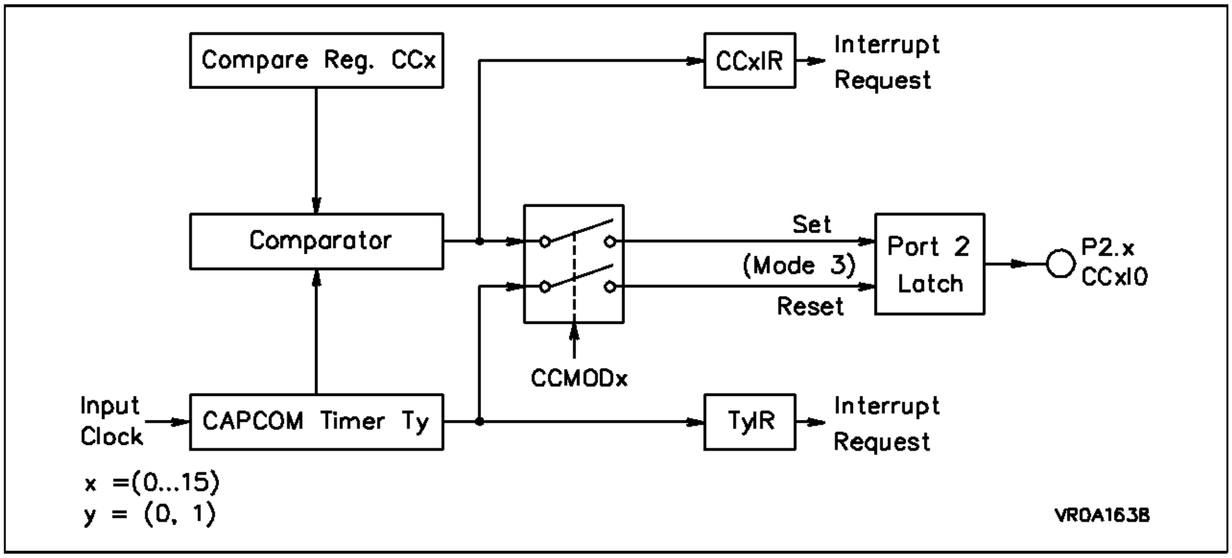
Compare Reg. CCx
CCxIR
Interrupt Request
Comparator
Set
(Mode 3)
Reset
Port 2 Latch
P2.x CCxIO
CCMODx
Input Clock
CAPCOM Timer Ty
TyIR
Interrupt Request
x =(0...15)
y = (0, 1)
VR0A1638

Figure 8-10. Timing Example for Compare Mode 2

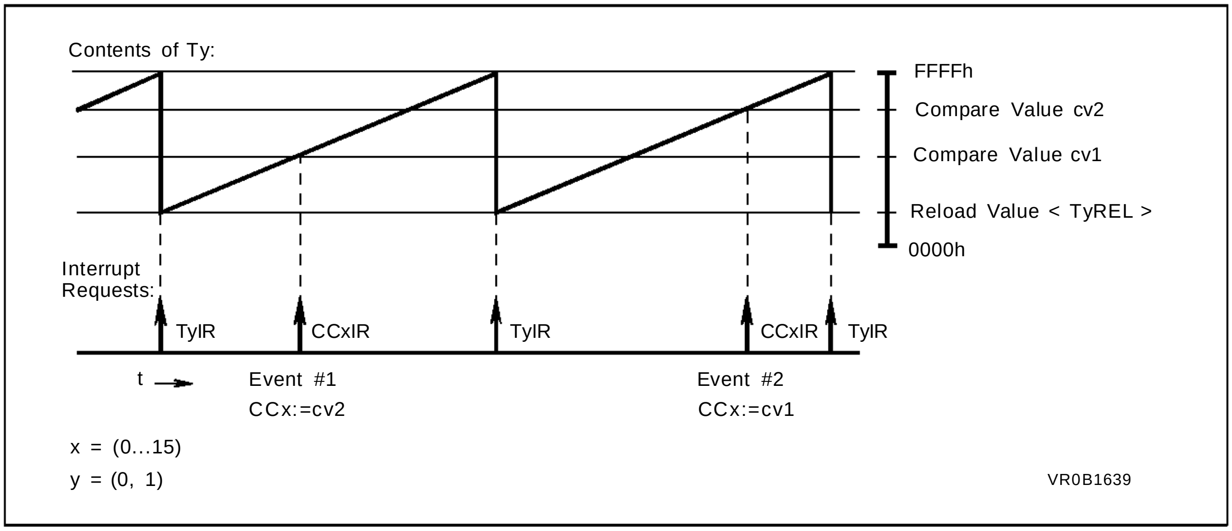
Contents of Ty:
FFFFh
Compare Value cv2
Compare Value cv1
Reload Value < TyREL >
0000h
Interrupt Requests:
TyIR
CCxIR
TyIR
CCxIR
TyIR
t
Event #1
CCx:=cv2
Event #2
CCx:=cv1
x = (0...15)
y = (0, 1)
VR0B1639

8.1.2.2.4 Compare Mode 3

Compare mode 3 is selected for register CCx by setting bit field CCMODx of the corresponding mode control register to '111b'. In compare mode 3, only one compare event will be generated per timer period.

When the first match within the timer period is detected, interrupt request flag CCxIR is set to '1' and pin CCxIO (alternate function of Port 2 pin P2.x) will be set to '1'. The pin will be reset to '0' when the allocated timer overflows. If a match was found for register CCx in this mode, all further compare events during the current timer period are disabled for CCx until the corresponding timer overflows. If, after a match was detected, the compare register is reloaded with a new value, this value will not become effective until the next timer period.

In order to use pin P2.x/CCxIO as compare signal output pin for compare register CCx, P2.x must be configured as output, i.e., the corresponding direction control bit DP2.x in register DP2 must be set to '1'. With this configuration, the initial state of the output signal can be programmed or its state can be modified at any time by writing to bit latch P2.x.

Figure 8.11 shows the timing example from the previous section, now for compare mode 3. The functional block diagram of a compare register in compare mode 3 is included in figure 8.9 of the previous section. Note that in compare mode 3 the port latch is set by the compare event and reset by the next timer overflow.

8.1.2.2.5 Double-Register Compare Mode

In the double-register compare mode, two compare registers work together to control one pin. This mode is selected by a special combination of modes for the two registers.

For the double-register mode, the 16 capture/compare registers are regarded as two banks of 8 registers each. Registers CC0 through CC7 form bank 1, while registers CC8 through CC15 form bank 2. For the double-register mode, a bank 1 register and a bank 2 register form a register pair. Both registers of the register pair operate on the pin associated with the bank 1 register (pins CC0IO through CC7IO, which are the alternate functions of Port 2 pins P2.0 through P2.7). Table 8.4 shows the relationship between the bank 1 and 2 register pairs and the affected pins for the double-register mode.

Figure 8-11. Timing Example for Compare Mode 3

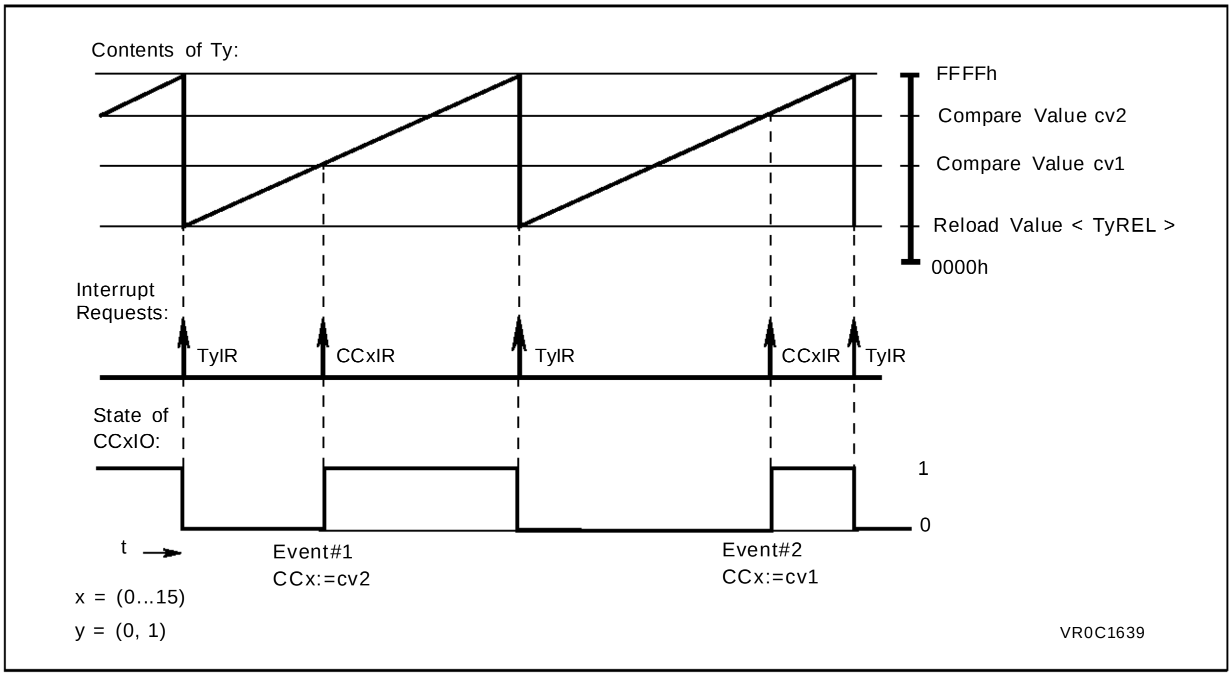

Table 8-4. Double-Register Mode Compare Register Pairs

Register Pair		Associated Pin
Bank 1	Bank 2	
CC0	**CC8**	**CC0IO**
CC1	**CC9**	**CC1IO**
CC2	**CC10**	**CC2IO**
CC3	**CC11**	**CC3IO**
CC4	**CC12**	**CC4IO**
CC5	**CC13**	**CC5IO**
CC6	**CC14**	**CC6IO**
CC7	**CC15**	**CC7IO**

The double-register mode can be programmed individually for each register pair. In order to enable the double-register mode, a bank 1 register (CC0 through CC7) must be programmed for compare mode 1, and the corresponding bank 2 register (CC8 through CC15) must be programmed for compare mode 0. If the corresponding bank 1 compare register is disabled or programmed for a mode other than mode 1, the bank 2 register will operate in compare mode 0 (interrupt-only mode) as described in section 8.1.2.2.1.

In the following, a bank 2 register (programmed to compare mode 0) will be referred to as CCz, while the corresponding bank 1 register (programmed to compare mode 1) will be referred to as CCx.

When a match is detected for one of the two registers in a register pair (CCx or CCz), the associated interrupt request flag (CCxIR or CCzIR) is set to '1' and pin CCxIO corresponding to bank 1 register CCx is toggled. The interrupt generated always corresponds to the register that caused the match.

NOTE: **If a match occurs simultaneously for both register CCx and register CCz of the register pair, pin CCxIO will be toggled only once, but two separate compare interrupt requests will be generated, one for vector CCxINT, and one for vector CCzINT.**

In order to use pin P2.x/CCxIO as compare signal output pin in the double-register mode, P2.x must be configured as output, i.e., the corresponding direction control bit DP2.x in register DP2 must be set to '1'. With this configuration, P2.x has the same characteristics as in compare mode 1.

Figure 8.12 shows a functional diagram of a register pair configured for the double-register compare mode. In this configuration example, the same timer allocation was chosen for both compare registers, but each register may also be individually allocated to either timer T0 or T1. Figure 8.13 shows a timing example for this compare mode. In this example, the compare values in registers CCx and CCz are not modified.

Figure 8-12. Double-Register Compare Mode Block Diagram

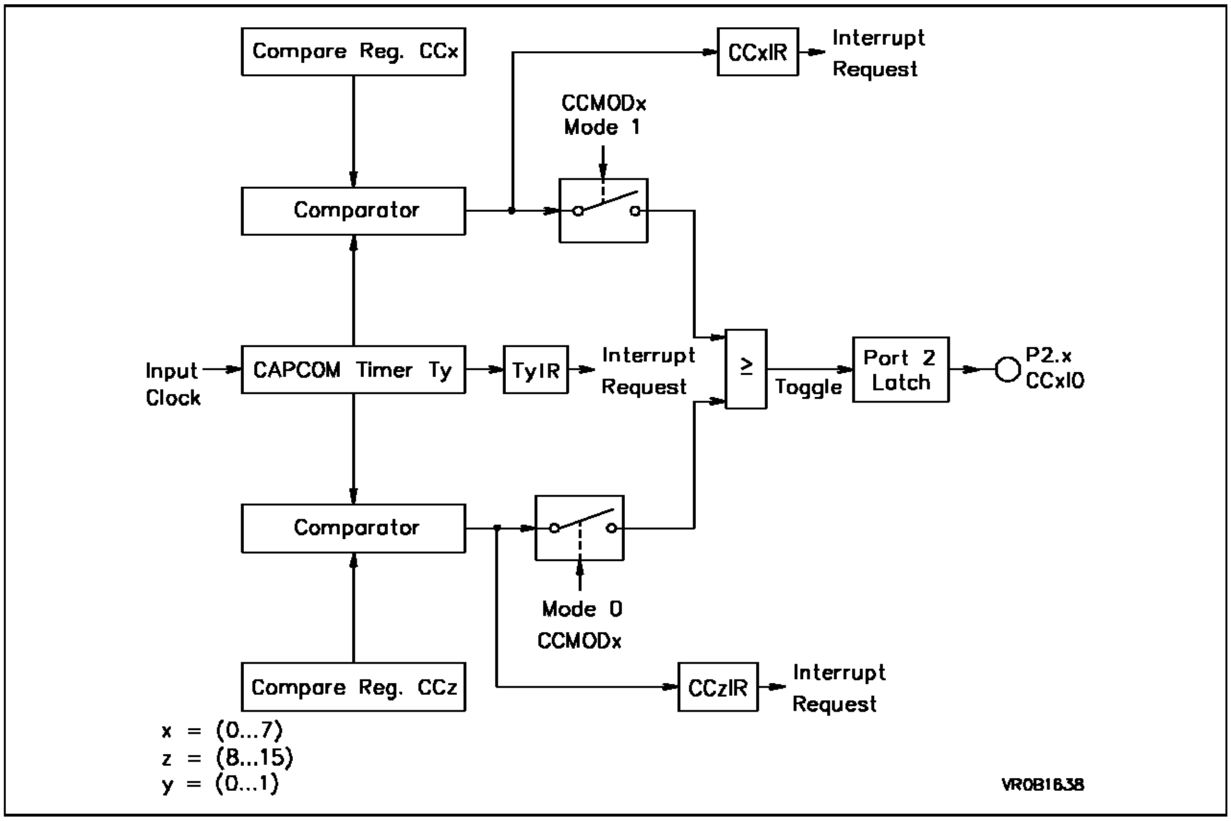
Compare Reg. CCx
CCxIR
Interrupt Request
CCMODx Mode 1
Comparator
Input Clock
CAPCOM Timer Ty
TyIR
Interrupt Request
≥
Toggle
Port 2 Latch
P2.x CCxIO
Comparator
Mode 0 CCMODx
Compare Reg. CCz
CCzIR
Interrupt Request
x = (0...7)
z = (8...15)
y = (0...1)
VR0B1638

Figure 8-13. Timing Example for the Double-Register Compare Mode

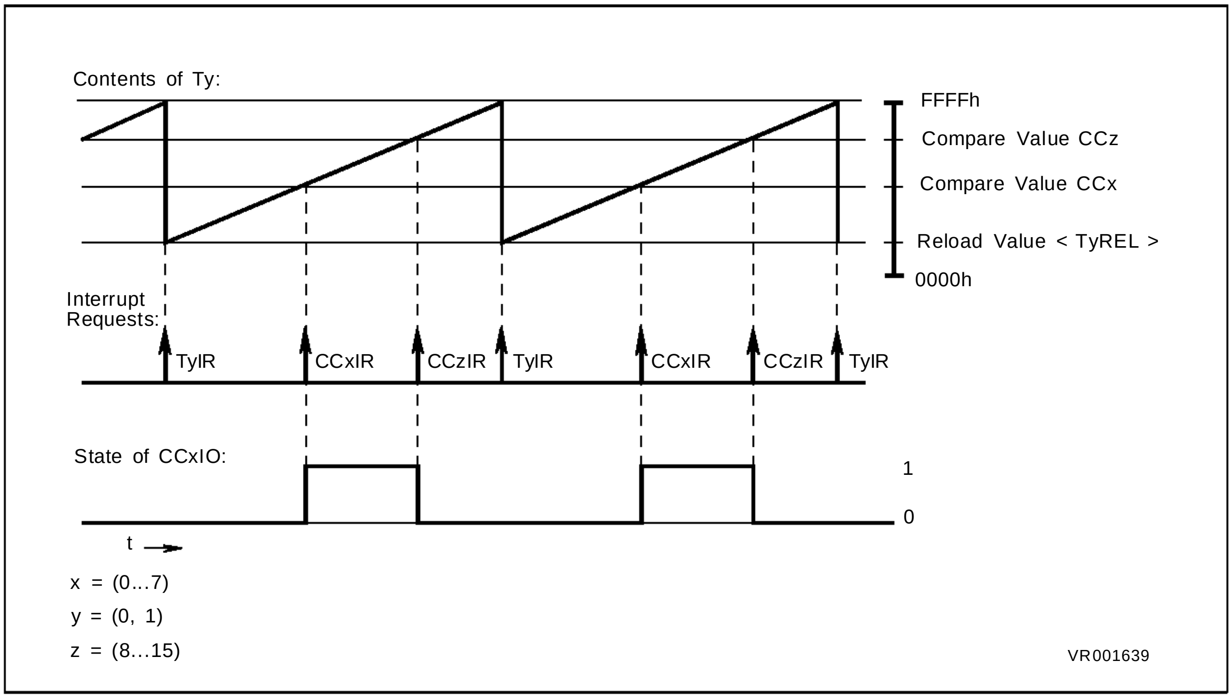

8.1.2.3 CAPTURE/COMPARE INTERRUPTS

Upon a capture or compare event, the interrupt request flag CCxIR for the respective capture/compare register CCx is set to ‘1’. This flag can be used to generate an interrupt or trigger a PEC service request when enabled by the interrupt enable bit CCxIE.

Capture interrupts can be regarded as external interrupt requests with the additional feature of recording the time at which the triggering event occurred (see also section 7.2.7).

Each of the 16 capture/compare registers (CC0 through CC15) has its own bit addressable interrupt control register (CC0IC through CC15IC) and its own interrupt vector (CC0INT through CC15INT). The organization of the interrupt control registers CC0IC through CC15IC is described on next page. Refer to chapter 7 for more details on the interrupt control registers.

8.2 GENERAL PURPOSE TIMERS (GPT)

The GPT unit represents a very flexible multifunctional timer structure which may be used for timing, event counting, pulse width measurement, pulse generation, frequency multiplication, and other purposes. It incorporates five 16-bit timers that have been divided into two blocks, GPT1 and GPT2.

Block GPT1 contains 3 timers/counters, while block GPT2 contains 2 timers/counters and a 16-bit Capture/Reload register (CAPREL). The GPT2 timers have a maximum resolution of 200ns (at 40MHz oscillator frequency), the resolution of the GPT1 timers is 400ns. Each timer in each block may operate independently in a number of different modes such as gated timer or counter mode, or may be concatenated with another timer of the same block. The auxiliary timers of GPT1 may optionally be configured as reload or capture registers for the core timer. In the GPT2 block, the additional CAPREL register supports capture and reload operation with extended functionality, and its core timer T6 may be concatenated with CAPCOM timers T0 and T1. Each block has alternate input/output functions and specific interrupts associated with it. Figures 8.14 and 8.15 show block diagrams of GPT1 and GPT2. In the following, the GPT1 and GPT2 blocks will be described separately.

CAPCOM **Registers Interrupt Control Registers CC0IC through CC15IC**

Reset Value for all of the registers 0000h

CC0IC (FF78h / BCh)

7	6	5	4	3	2	1	0
CC0IR	CC0IE	ILVL				GLVL	

CC1IC (FF7Ah / BDh)

7	6	5	4	3	2	1	0
CC1IR	CC1IE	ILVL				GLVL	

CC2IC (FF7Ch / BEh)

7	6	5	4	3	2	1	0
CC2IR	CC2IE	ILVL				GLVL	

CC3IC (FF7Eh / BFh)

7	6	5	4	3	2	1	0
CC3IR	CC3IE	ILVL				GLVL	

CC4IC (FF80h / C0h)

7	6	5	4	3	2	1	0
CC4IR	CC4IE	ILVL				GLVL	

CC5IC (FF82h / C1h)

7	6	5	4	3	2	1	0
CC5IR	CC5IE	ILVL				GLVL	

CC6IC (FF84h / C2h)

7	6	5	4	3	2	1	0
CC6IR	CC6IE	ILVL				GLVL	

CC7IC (FF86h / C3h)

7	6	5	4	3	2	1	0
CC7IR	CC7IE	ILVL				GLVL	

CC8IC (FF88h / C4h)

7	6	5	4	3	2	1	0
CC8IR	CC8IE	ILVL				GLVL	

CC9IC (FF8Ah / C5h)

7	6	5	4	3	2	1	0
CC9IR	CC9IE	ILVL				GLVL	

CC10IC (FF8Ch / C6h)

7	6	5	4	3	2	1	0
CC10IR	CC10IE	ILVL				GLVL	

CC11IC (FF8Eh / C7h)

7	6	5	4	3	2	1	0
CC11IR	CC11IE	ILVL				GLVL	

CC12IC (FF90h / C8h)

7	6	5	4	3	2	1	0
CC12IR	CC12IE	ILVL				GLVL	

CC13IC (FF92h / C9h)

7	6	5	4	3	2	1	0
CC13IR	CC13IE	ILVL				GLVL	

CC14IC (FF94h / CAh)

7	6	5	4	3	2	1	0
CC14IR	CC14IE	ILVL				GLVL	

CC15IC (FF96h / CBh)

7	6	5	4	3	2	1	0
CC15IR	CC15IE	ILVL				GLVL	

Figure 8-14. Block Diagram of GPT1

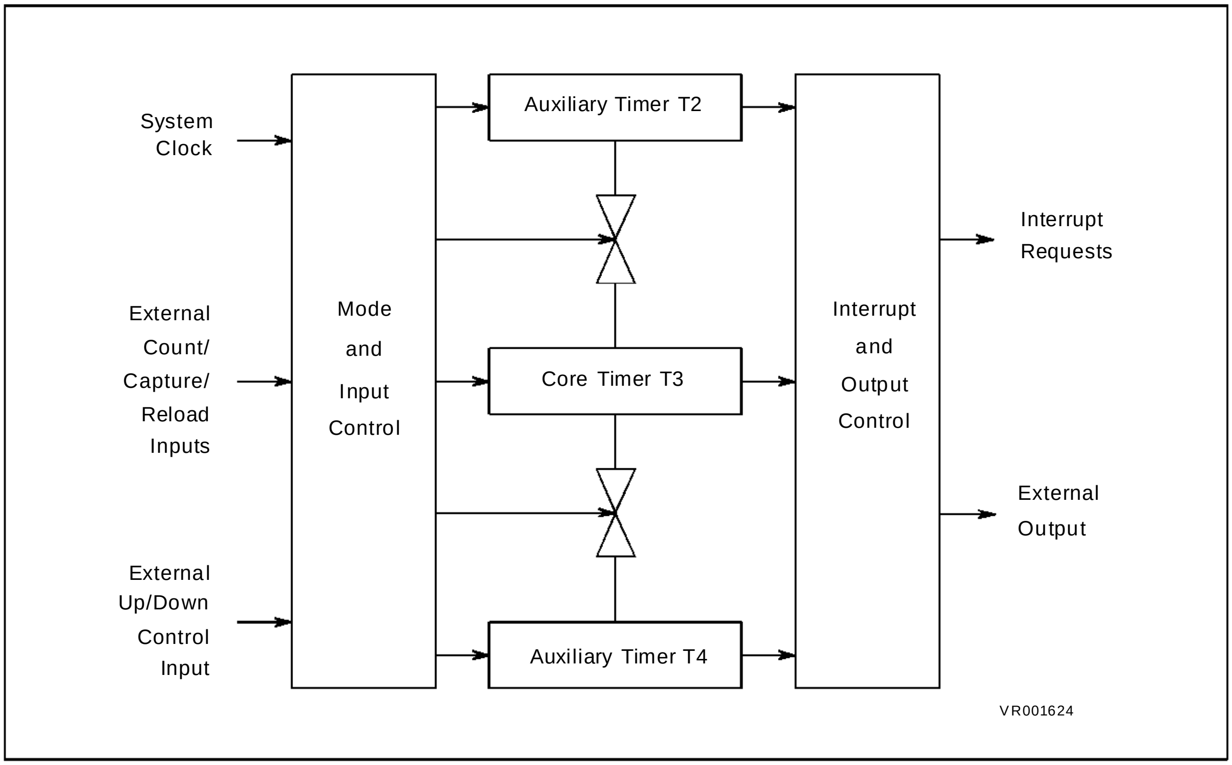
System Clock
External Count/ Capture/ Reload Inputs
External Up/Down Control Input
Mode and Input Control
Auxiliary Timer T2
Core Timer T3
Auxiliary Timer T4
Interrupt and Output Control
Interrupt Requests
External Output
VR001624

Figure 8-15. Block Diagram of GPT2

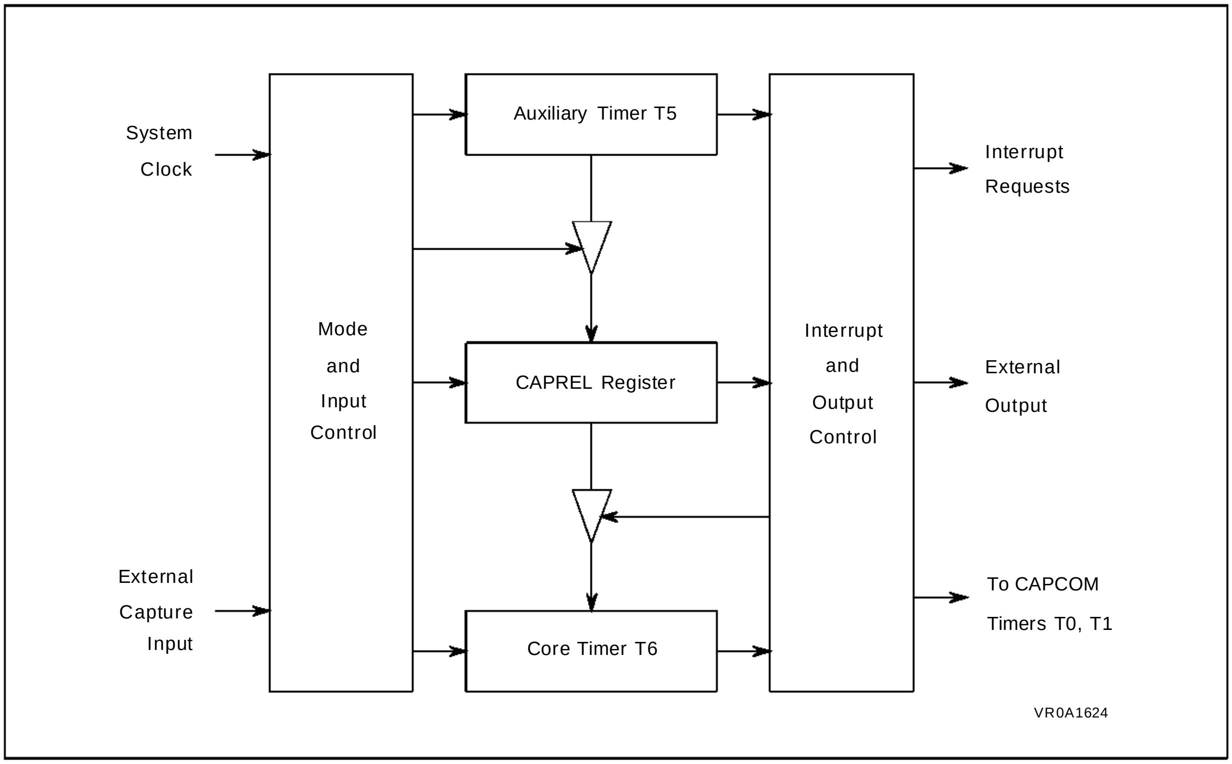
System Clock
External Capture Input
Mode and Input Control
Auxiliary Timer T5
CAPREL Register
Core Timer T6
Interrupt and Output Control
Interrupt Requests
External Output
To CAPCOM Timers T0, T1
VR0A1624

8.2.1 GPT1 Block

All three timers T2, T3, T4 of block GPT1 can run in 3 basic modes, which are timer, gated timer, and counter mode, and all timers can either count up or down. Each timer has an alternate input function pin on port 3 associated with it which serves as the gate control in gated timer mode, or as the count input in counter mode. As a specific feature of the core timer T3, its count direction may be dynamically altered by a signal at an external input pin, and each overflow/underflow may be indicated on an alternate output function pin. The auxiliary timers T2 and T4 may additionally be concatenated with the core timer, or used as capture or reload registers for the core timer.

The current contents of each timer can be read or modified by the CPU by accessing the corresponding timer registers T2, T3, or T4, which are located in the non-bit-addressable SFR space. When any of the timer registers is written by the CPU in the state immediately before a timer increment, reload, or capture is to be performed, the CPU write operation has priority in order to guarantee correct results.

From a programmer's point of view, the GPT1 block is composed of a set of SFRs as shown in figure 8.16. Those portions of port and direction registers which are not used for alternate functions by the GPT1 block are not shaded.

Figure 8-16. SFRs and Port Pins Associated with the GPT1 Block

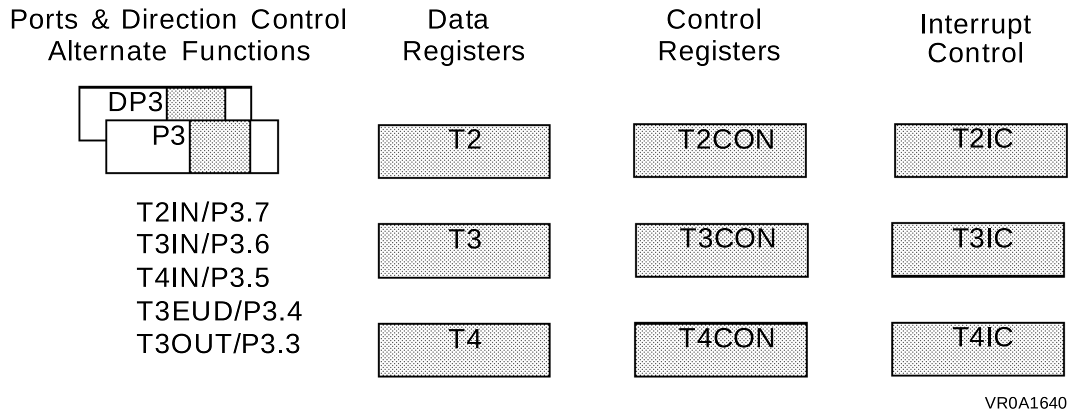

DP3	**Port 3 Direction Control Register**
P3	**Port 3 Data Register**
T2	**GPT1 Timer 2 Register**
T3	**GPT1 Timer 3 Register**
T4	**GPT1 Timer 4 Register**
T2CON	**GPT1 Timer 2 Control Register**
T3CON	**GPT1 Timer 3 Control Register**
T4CON	**GPT1 Timer 4 Control Register**
T2IC	**GPT1 Timer 2 Interrupt control Register**
T3IC	**GPT1 Timer 3 Interrupt Control Register**
T4IC	**GPT1 Timer 4 Interrupt Control Register**

In the following, the individual features of each timer in block GPT1 will be discussed separately.

8.2.1.1 GPT1 CORE TIMER T3

The configuration of the core timer T3 is determined by its bit-addressable control register T3CON, which is shown below

T3CON **(FF42h / A1h)**

GPT1 Core Timer T3 Control Register

Reset Value : 0000h

15	14	13	12	11	10	9	8
R					T3OTL	T3OE	T3UDE

7	6	5	4	3	2	1	0
T3UD	T3R	R	T3M		T3I		

b15 to b11, b5 = R: **Reserved.**

b10 = T30TL: **Timer Output Toggle Latch. Toggles on each overflow/underflow of T3. Can be set or reset by software.**

b9 = T30E: **Alternate Output Function Enable. This function is enabled if T30E=1**

b8 = T3UDE: **Timer 3 External Up/Down Control Enable Bit.**

b7 = T3UD: **Timer 3 Up/Down Control Bit. See table 8.6**

b6 = T3R: **Timer 3 Run Bit. If set at '1' will run Timer/Counter 3 otherwise stops Timer/Counter 3.**

b4,b3 = T3M: **Timer 3 Mode Control.**

b2 to b0 = T3I: **Timer 3 Input Selection Bits. See table 8.7 and 8.8 for more details.**

Timer 3 Mode Selection

Bit field T3M (Timer 3 Mode Control) selects the basic operating mode for timer T3. The available options are listed in table 8.5, and will be discussed in detail in the following subsections.

Table 8-5. Core Timer T3 Mode Control

T3M		Mode
(1)	(0)	
0	**0**	**Timer**
0	**1**	**Counter**
1	**0**	**Gated Timer (gate is active low)**
1	**1**	**Gated Timer (gate is active high)**

Timer 3 Run Bit

The timer can be started or stopped by software through bit T3R (Timer T3 Run Bit). If T3R= '0', the timer stops. Setting T3R to '1' will start the timer. In gated timer mode, the timer will only run if T3R= '1' and the gate is active.

Count Direction Control

The count direction of the core timer can be specified either by software or by the external input pin T3EUD (Timer T3 External Up/Down Control Input), which is the alternate input function of port pin P3.4. These options are selected by bits T3UD and T3UDE in control register T3CON. When the up/down control is done by software (bit T3UDE = '0'), the count direction can be altered by setting or clearing bit T3UD. When T3UDE = '1', pin T3EUD is selected to be the controlling source of the count direction. However, bit T3UD can still be used to reverse the actual count direction, as listed in table 8.6. If T3UD = '0' and pin T3EUD shows a low level, the timer is counting up. With a high level at T3EUD the timer is counting down. If T3UD = '1', a high level at pin T3EUD specifies counting up, and a low level specifies counting down. The count direction can be changed regardless of whether the timer is running or not.

When pin T3EUD/P3.4 is used as external count direction control input, its corresponding direction control bit DP3.4 must be set to '0'.

Table 8-6. GPT1 Core Timer T3 Count Direction Control

Pin T3EUD	Bit T3UDE	Bit B3UD	Count Direction
X	**0**	**0**	**Count Up**
X	**0**	**1**	**Count Down**
0	**1**	**0**	**Count Up**
1	**1**	**0**	**Count Down**
0	**1**	**1**	**Count Down**
1	**1**	**1**	**Count Up**

Timer 3 Output Toggle Latch

An overflow or underflow of timer T3 will clock the toggle bit T3OTL in control register T3CON. T3OTL can also be set or reset by software. Bit T3OE (Alternate Output Function Enable) in register T3CON enables the state of T3OTL to be an alternate function of the external output pin T3OUT/P3.3. For that purpose, a ‘1’ must be written into port data latch P3.3 and pin T3OUT/P3.3 must be configured as output by setting direction control bit DP3.3 to ‘1’. If T3OE = ‘1’, pin T3OUT then outputs the state of T3OTL. If T3OE = ‘0’, pin T3OUT can be used as a general purpose I/O pin.

In addition, T3OTL can be used in conjunction with the timer over/underflows as a trigger source for the counter or reload functions of the auxiliary timers. For this purpose, the state of T3OTL does not have to be available at pin T3OUT, because an internal connection is provided for this option. This feature is described in detail in section 8.2.1.2.3 and 8.2.1.2.4 about the auxiliary timers.

8.2.1.1.1 Timer Mode

Timer mode is selected for the core timer T3 by setting bit field T3M in register T3CON to ‘00b’. In this mode, T3 is clocked with the internal system clock divided by a programmable prescaler, which is selected by bit field T3I. The input frequency f_{T3} for timer T3 is scaled linearly with slower oscillator frequencies f_{OSC}, as can be seen from the following formula:

$$f_{T3} = \frac{f_{OSC}}{16 \times 2^{<T3I>}}$$

The timer input frequencies, resolution and periods which result from the selected prescaler option when using a 40MHz oscillator are listed in table 8.7. This table also applies to the gated timer mode of T3 and to the auxiliary timers T2 and T4 in timer and gated timer mode. Note that some numbers may be rounded to 3 significant digits. Figure 8.17 shows a block diagram of timer T3 in timer mode.

8.2.1.1.2 Gated Timer Mode

In the gated timer mode, the same options for the input frequency as for the timer mode are available (see table 8.7). However, the input clock to the timer in this mode is gated by the external input pin T3IN (Timer T3 External Input), which is an alternate function of P3.6. Figure 8.18 shows a block diagram of the core timer in this mode.

The gated timer mode is selected by setting bit T3M.1 (T3CON.4) to ‘1’. Bit T3M.0 (T3CON.3) selects the active level of the gate. Pin T3IN/P3.6 must be configured as input, i.e., direction control bit DP3.6 must contain ‘0’.

Table 8-7. GPT1 Timer Input Frequencies, Resolution and Periods

f_{osc} = 40MHz	**Timer Input Selection T2I/T3I/T4I**							
	000b	001b	010b	011b	100b	101b	110b	111b
Prescaler for f_{OSC}	**16**	**32**	**64**	**128**	**256**	**512**	**1024**	**2048**
Input Frequency	**2.5MHz**	**1.25MHz**	**625kHz**	**312.5kHz**	**156.25kHz**	**78.125kHz**	**39.06kHz**	**19.53kHz**
Resolution	**400ns**	**800ns**	**1.6µs**	**3.2µs**	**6.4µs**	**12.8µs**	**25.6µs**	**51.2µs**
Period	**26ms**	**52.5ms**	**105ms**	**210ms**	**420ms**	**840ms**	**1.68s**	**3.36s**

If T3M.0 = '0', the timer is enabled when T3IN shows a low level. A high level at this pin stops the timer. If T3M.0= '1', pin T3IN must have a high level in order to enable the timer to run. In addition, the timer can be turned on or off by software using bit T3R. The timer will only run if T3R= '1' and the gate is active; it will stop if either T3R= '0' or the gate is in active. Note that a transition of the gate signal at pin T3IN does not cause an interrupt request.

Figure 8-17. Block Diagram of Core Timer T3 in Timer Mode

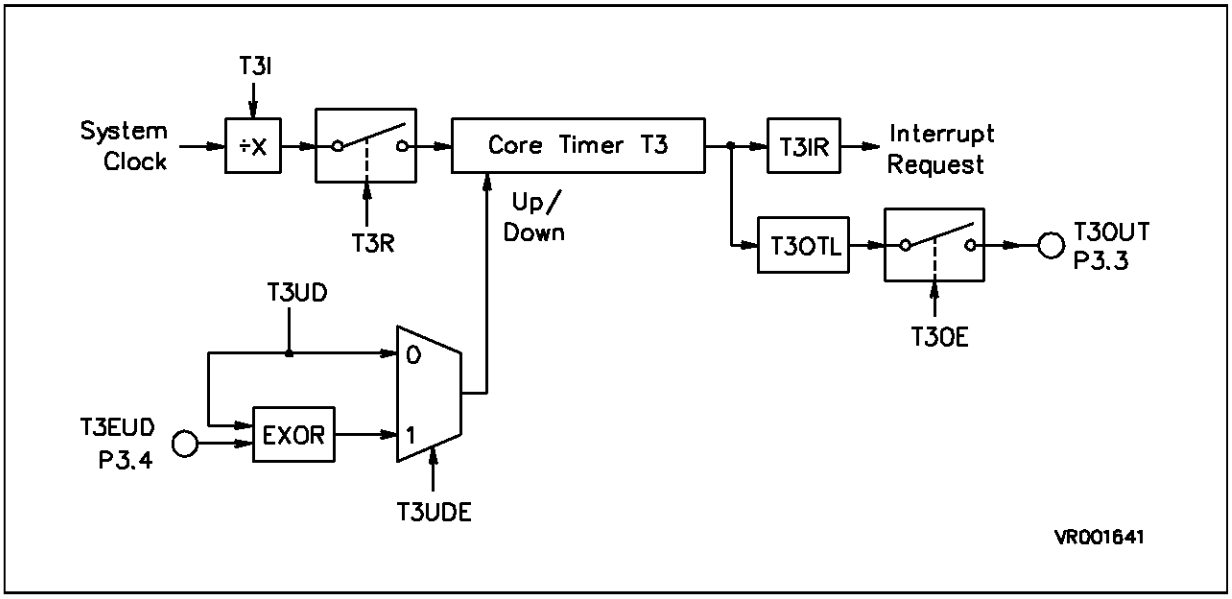
T3I
System Clock
÷X
T3R
Core Timer T3
Up/ Down
T3IR
Interrupt Request
T3OTL
T3OUT P3.3
T3OE
T3UD
0
1
T3EUD P3.4
EXOR
T3UDE
VR001641

Figure 8-18. Block Diagram of Core Timer T3 in Gated Timer Mode

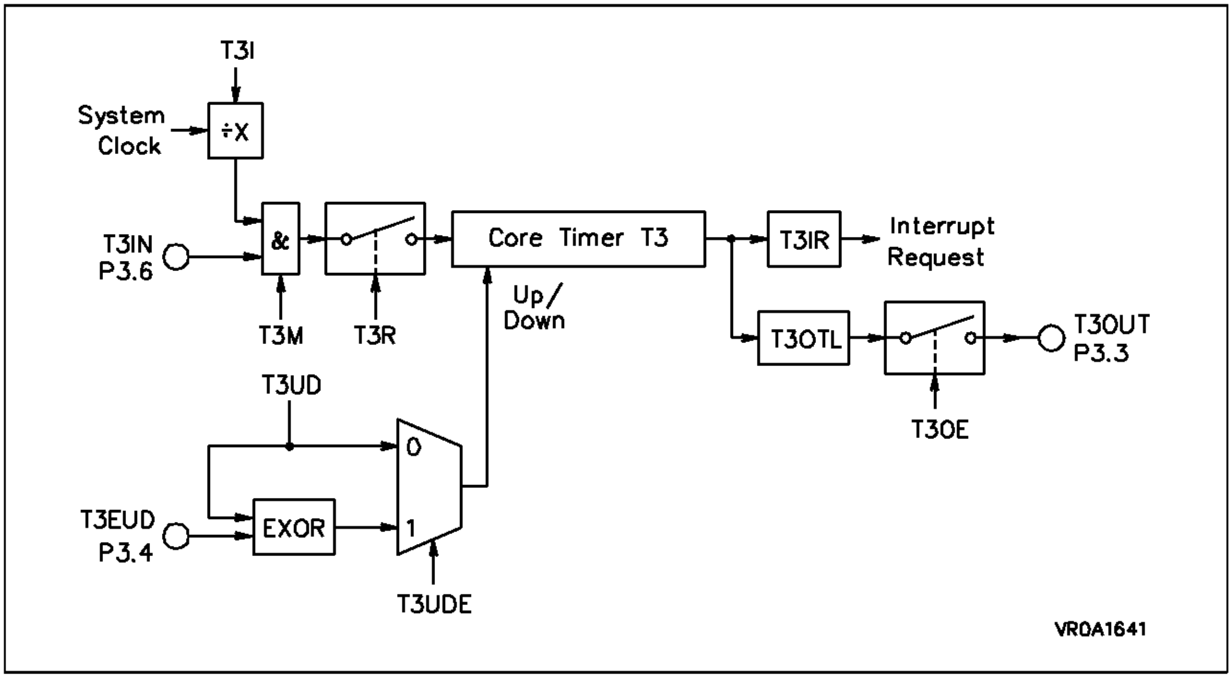
T3I
System Clock
÷X
T3IN P3.6
&
T3M
T3R
Core Timer T3
Up/ Down
T3IR
Interrupt Request
T3OTL
T3OUT P3.3
T3OE
T3UD
0
1
T3EUD P3.4
EXOR
T3UDE
VR0A1641

8.2.1.1.3 Counter Mode

Counter mode is selected for T3 by programming bit field T3M in register T3CON to '01b'. In counter mode, timer T3 is clocked by a transition at the external input pin T3IN, which is an alternate function of P3.6. The event causing an increment or decrement of the timer can be a positive, a negative, or both a positive and a negative transition at this pin. The options are selected by bit field T3I in control register T3CON as shown in table 8.8.

For counter operation, pin T3IN/P3.6 must be configured as input by setting direction control bit DP3.6 to '0'. The maximum input frequency which is allowed in counter mode is fosc/16 (1.25MHz at f_{OSC} = 40MHz). To ensure that a transition of the count input signal which is applied to T3IN is correctly recognized, its level should be held for at least 8 state times before it changes. Figure 8.19 shows a block diagram of the core timer in this mode.

Table 8-8. GPT1 Core Timer T3 Counter Mode Input Selection

T3I			Counter T3 in Incremented/Decremented on :
(2)	(1)	(0)	
0	**0**	**0**	**No Transition Selected, T3 Disabled**
0	**0**	**1**	**Positive External Transition at Pin T3IN**
0	**1**	**0**	**Negative External Transition at Pin T3IN**
0	**1**	**1**	**Positive and Negative Ext. Transition at T3IN**
1	**X**	**X**	**(reserved)**

Figure 8-19. Block Diagram of Core Timer T3 in Counter Mode

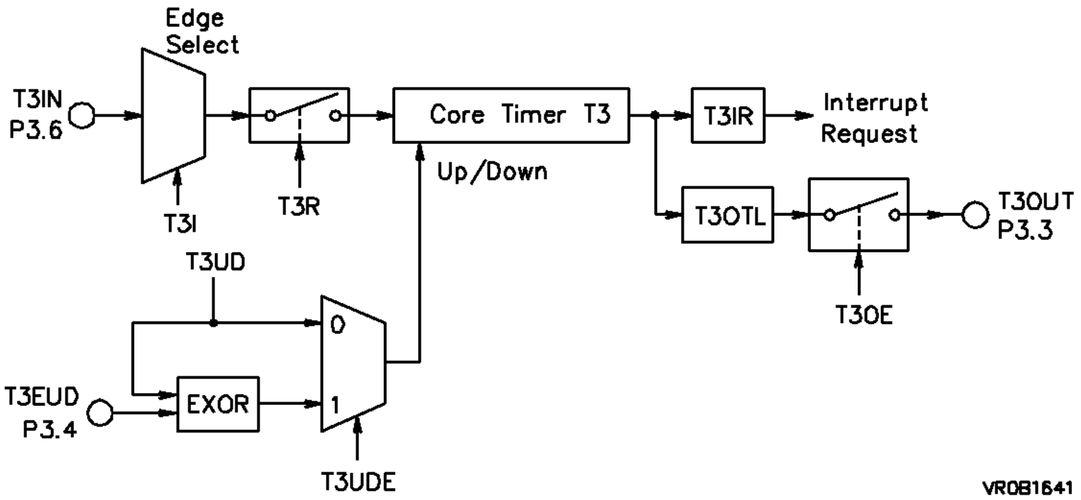

8.2.1.1.4 Interrupt Control for Core Timer T3

When the timer T3 overflows from FFFFh to 0000h (when counting up), or when it underflows from 0000h to FFFFh (when counting down), interrupt request flag T3IR in register T3IC will be set. This will cause an interrupt to the timer T3 interrupt vector T3INT, or trigger a PEC service if the interrupt enable bit (T3IE in register T3IC) is set. The organization of register T3IC is shown below. Refer to chapter 7 for more details on interrupts.

T3IC **(FF62h / B1h)**

GPT1 Core Timer T3 Interrupt Control Register

Reset Value :0000h

7	6	5	4	3	2	1	0
T3IR	T3IE	ILVL				GLVL	

8.2.1.2 GPT1 AUXILIARY TIMERS T2 AND T4

Both auxiliary timers T2 and T4 have exactly the same functionality. They can be configured for timer, gated timer, or counter mode with the same options for the timer frequencies and the count signal as the core timer T3. In addition to these 3 counting modes, the auxiliary timers can be concatenated with the core timer, or they may be used as reload or capture registers in conjunction with the core timer. Unlike the core timer, the auxiliary timers can not be controlled for up or down count by an external signal, nor do they have a toggle bit or an alternate output function.

The individual configuration for timers T2 and T4 is determined by their bit-addressable control registers T2CON and T4CON, which are both organized identically. Note that functions which are present in all 3 timers of block GPT1 are controlled in the same bit positions and in the same manner in each of the specific control registers. The control registers for the auxiliary timers are shown below.

T2CON **(FF40h / A0h)**

GPT1 Auxiliary Timers T2 Control Register

Reset Value :0000h

15	14	13	12	11	10	9	8
R							

7	6	5	4	3	2	1	0
T2UD	T2R	T2M			T2I		

T4CON **(FF44h / A2h)**

GPT1 Auxiliary Timers T4 Control Register

Reset Value :0000h

15	14	13	12	11	10	9	8
R							

7	6	5	4	3	2	1	0
T4UD	T4R	T4M			T4I		

b15 to b8 = R: **Reserved.**

b7 = TxUD: **Timer x Up/Down Control bit.**
TxUD = 0: Select up counting
TxUD = 1: Select down counting

b6 = TxR: **Timer x Run Bit.**
TxR = 0: Timer x Stops
TxR = 1: Timer x Runs

b5 to b3 = TxM: **Timer x Mode Control.**
See table 8.9.

b2 to b0 = TxI: **Timer x Input Selection.**
See table 8.7, 8.10, 8.11 or 8.12 for more details.

Table 8-9. GPT1 Auxiliary Timer T2 and T4 Mode Control

T2M/T4M			Mode
(2)	(1)	(0)	
0	**0**	**0**	**Timer**
0	**0**	**1**	**Counter**
0	**1**	**0**	**Gated Timer (gate is active low)**
0	**1**	**1**	**Gated Timer (gate is active high)**
1	**0**	**0**	**Reload**
1	**0**	**1**	**Capture**
1	**1**	**X**	**(reserved, no function selected)**

The operating modes for the auxiliary timers T2 and T4 are independently selectable by bit fields T2M and T4M. The available options for both timers are listed in table 8.9, and will be discussed in detail in the following subsections.

In all of the counting modes of operation, the auxiliary timers can count up or down depending on the state of their control bits T2UD and T4UD. They can be started or stopped through their run bits T2R and T4R. In gated timer mode, the respective timer will only run if T2R= '1' or T4R= '1' and the gate is active.

8.2.1.2.1 Timer Mode

The operation of the auxiliary timers in this mode is identical to that of the core timer T3. Timer mode is selected for the auxiliary timers T2 or T4 by setting the mode control field T2M or T4M in the respective control register T2CON or T4CON to '000b'.

The input frequencies f_{T2} and f_{T4} to T2 and T4 are determined by the contents of the timer input selection fields T2I and T4I as follows:

$$f_{T2} = \frac{f_{OSC}}{16 \times 2^{<T2I>}} \quad , \quad f_{T4} = \frac{f_{OSC}}{16 \times 2^{<T4I>}}$$

For an overview of the resulting input frequencies, resolution, and periods when using a 40MHz oscillator, refer to table 8.7 in section 8.2.1.1.1. The block diagram of an auxiliary timer in timer mode is shown in the following figure 8.20.

Figure 8-20. Block Diagram of an Auxiliary Timer in Timer Mode

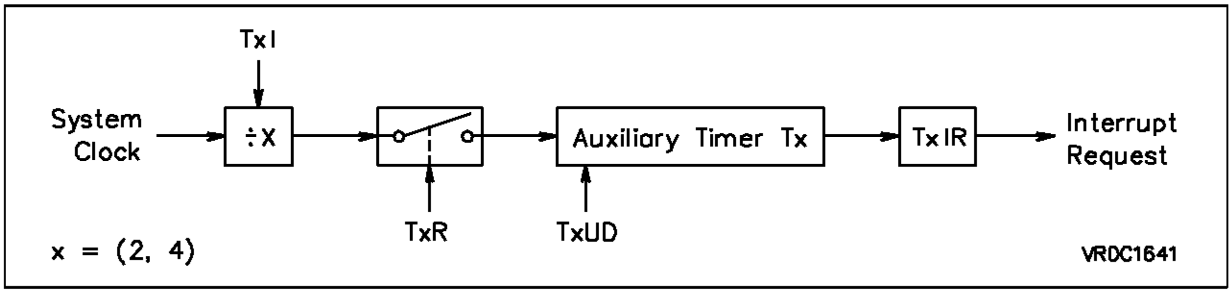

8.2.1.2.2 Gated Timer Mode

The gated timer mode for the auxiliary timers functions as described for the core timer. For the auxiliary timers, an active low level for the gate is selected by setting the mode control fields T2M or T4M to '010b', and an active high level is selected by the bit combination '011b'. The gate for timer T2 is the external input pin T2IN, and T4IN is the gate for timer T4. T2IN is an alternate function of P3.7, while T4IN is an alternate function of P3.5. In order to use these alternate functions, the corresponding direction control bits DP3.7 and DP3.5 must be set to '0'. Figure 8.21 shows a block diagram of an auxiliary timer in gated timer mode.

Figure 8-21. Block Diagram of an Auxiliary Timer in Gated Mode

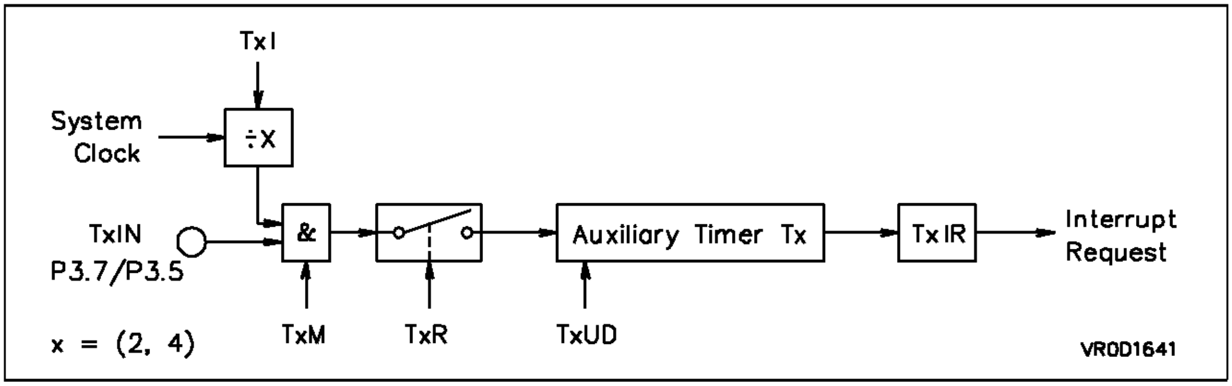

8.2.1.2.3 Counter Mode

Basically, the counter mode for the auxiliary timers functions as described for the core timer. In addition, however, timers T2 and T4 offer the possibility of selecting between two count sources. The first source is an external input pin, T2IN for timer T2, and T4IN for timer T4. One can select either a positive, a negative, or both a positive and a negative transition to cause an increment or decrement. The direction control bits DP3.7 for T2IN or DP3.5 for T4IN must be set to '0', and the input signal should be held at least 8 states for correct edge detection, which results in a maximum allowed frequency for the count input signal of 1.25MHz at f_{OSC} = 40MHz.

The second count source is the toggle bit T3OTL of the core timer T3. One can also select either a positive, a negative, or both a positive and a negative transition of T3OTL to cause an increment or decrement. Note that only state transitions of T3OTL which are caused by the overflows/underflows of T3 will trigger the counter function of T2/T4. Modifications of T3OTL by software will NOT trigger the counter function of T2/T4. Table 8.10 summarizes the different counter modes of the auxiliary timers. A block diagram of an auxiliary timer in counter mode is shown in figure 8.22.

Using the toggle bit T3OTL as a clock source for an auxiliary timer in counter mode offers the feature of

Table 8-10. GPT1 Auxiliary Timers Counter Mode Input Selection (x = 2 or 4)

T2I/T4I			**Counter T2/T4 is Incremented/Decremented on**
(2)	(1)	(0)	
0	**0**	**0**	**No transition Selected, Tx Disabled**
0	**0**	**1**	**Positive External Transition on TxIN**
0	**1**	**0**	**Negative External Transition on TxIN**
0	**1**	**1**	**Positive and Negative External Transition on TxIN**
1	**0**	**0**	**No Transition Selected, Tx Disabled**
1	**0**	**1**	**Positive Transition of T3OTL**
1	**1**	**0**	**Negative Transition of T3OTL**
1	**1**	**1**	**Positive and Negative Transition of T3OTL**

Figure 8-22. Block diagram of an Auxiliary Timer in Counter Mode

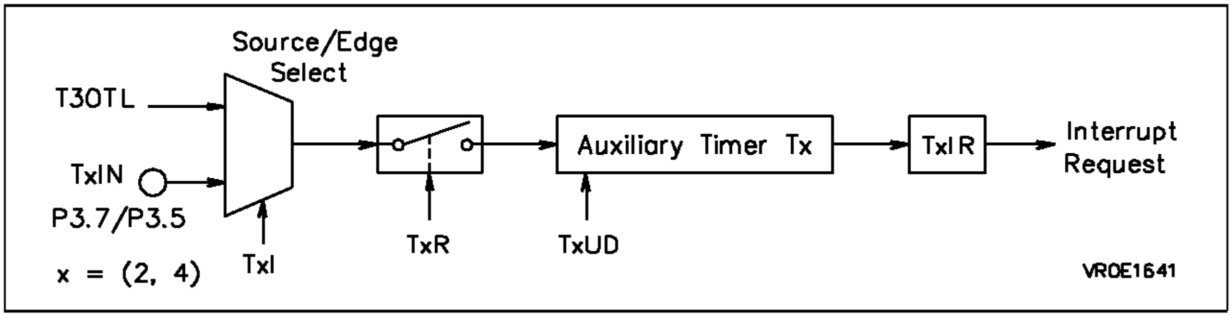

concatenating the core timer T3 and an auxiliary timer. Depending on which transition of T3OTL is selected to clock the auxiliary timer, one can form a 32-bit or 33-bit timer. This is explained in the following:

If both a positive and a negative transition of T3OTL is used to clock the auxiliary timer, this timer is clocked one very overflow/underflow of the core timer T3. Thus, the two timers form a 32-bit timer.

If either a positive or a negative transition of T3OTL is selected to clock the auxiliary timer, this timer is clocked on every second overflow/underflow of the core timer. This configuration forms a 33-bit timer (16-bit core timer+T3OTL+16-bit auxiliary timer).

The count directions of the two concatenated timers are not required to be the same. This offers a wide variety of different configurations. A block diagram showing the concatenation of a core timer and an auxiliary timer is shown in Figure 8.23.

Figure 8-23. Concatenation of Core Timer T3 And an Auxiliary Timer

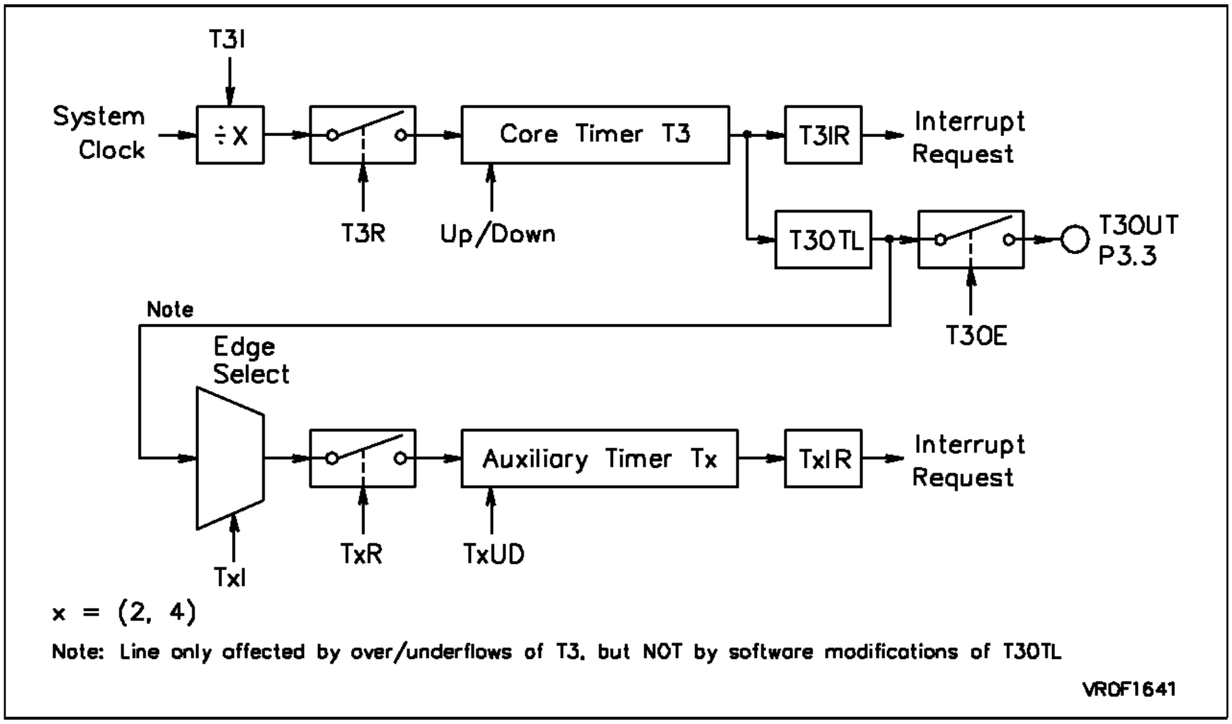
T3I
System Clock
÷X
Core Timer T3
T3IR
Interrupt Request
T3R
Up/Down
T3OTL
T3OUT P3.3
T3OE
Note
Edge Select
Auxiliary Timer Tx
TxIR
Interrupt Request
TxR
TxUD
TxI
x = (2, 4)
Note: Line only affected by over/underflows of T3, but NOT by software modifications of T3OTL
VR0F1641

8.1 chap 1

8.2 chap2

8.2.1 chap 2.1

8.2.1.1 chap 2.1.1

Table 8-11. GPT1 Auxiliary Timers Reload Trigger Selection (x = 2 or 4)

T2I/T4I			Reload on
(2)	**(1)**	**(0)**	
0	0	0	No transition Selected, Tx Disabled
0	0	1	Positive External Transition on TxIN
0	1	0	Negative External Transition on TxIN
0	1	1	Positive and Negative External Transition on TxIN
1	0	0	No Transition Selected, Tx Disabled
1	0	1	Positive Transition of T3OTL
1	1	0	Negative Transition of T3OTL
1	1	1	Positive and Negative Transition of T3OTL

8.2.1.2 chap 2.1.2

8.2.1.2.1 chap 2.1.2.1

8.2.1.2.2 chap 2.1.2.2

8.2.1.2.3 Reload Mode

Reload mode is selected by programming the mode control fields T2M or T4M to '100b'. In reload mode, the core timer T3 is reloaded with the contents of an auxiliary timer register. Two different sources can be selected to cause a reload of the core timer. The options are programmed by the input selection bits of bit fields T2I and T4I in registers T2CON or T4CON as shown in table 8.11. When programmed for reload mode, the respective auxiliary timer T2 or T4 stops, independent of its run flag T2R or T4R.

When bit T2I.2= '0' or bit T4I.2= '0', the source which can cause a reload is the external input pin T2IN for timer register T2 or pin T4IN for timer register T4. One can select either a positive, a negative, or both a positive and a negative transition at these input pins to cause a reload. When a selected transition is detected at the input pin T2IN or T4IN, the core timer T3 is reloaded with the con-

Figure 8-24. GPT1 Auxiliary Timer in External Reload Mode

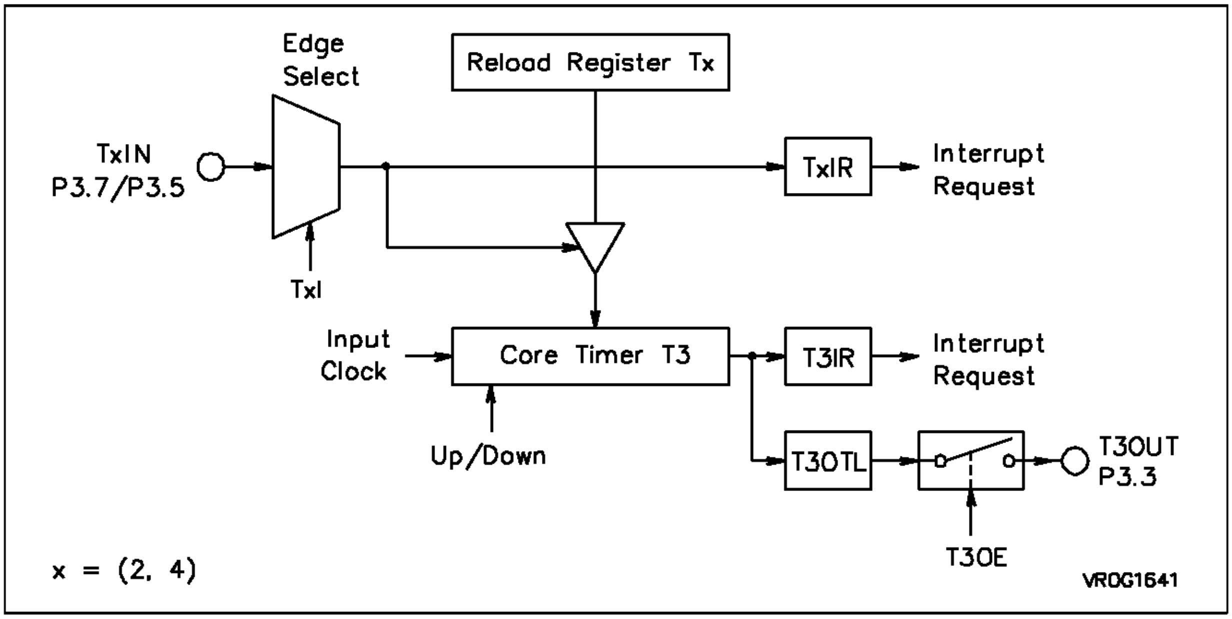
Edge Select
Reload Register Tx
TxIN
P3.7/P3.5
TxIR
Interrupt Request
TxI
Input Clock
Core Timer T3
T3IR
Interrupt Request
Up/Down
T3OTL
T3OUT
P3.3
T3OE
x = (2, 4)
VR0G1641

Figure 8-25. GPT1 Auxiliary Timer in Reload Mode Triggered by T30TL

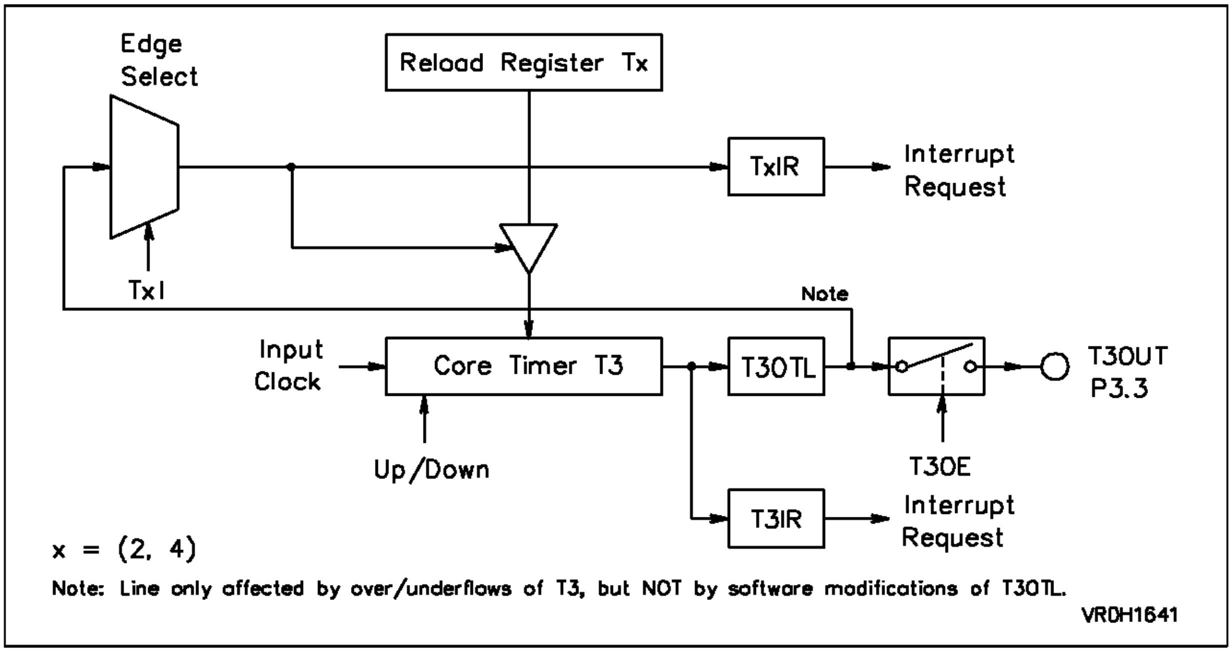
Edge
Select
Reload Register Tx
TxIR
Interrupt
Request
TxI
Note
Input
Clock
Core Timer T3
T3OTL
T3OUT
P3.3
Up/Down
T3OE
T3IR
Interrupt
Request
x = (2, 4)
Note: Line only affected by over/underflows of T3, but NOT by software modifications of T3OTL.
VRDH1641

tents of the auxiliary timer, and the interrupt request flag T2IR or T4IR of the auxiliary timer is set. The direction control bits DP3.7 for T2IN or DP3.5 for T4IN must be set to ‘0’, and the input signal should hold its level for at least 8 states to ensure correct recognition of the triggering edge. Figure below shows a block diagram of this external reload mode.

When bit T2I.2= ‘1’ or bit T4I.2= ‘1’, a transition of the toggle bit T3OTL which is caused by an overflow/underflow of T3 is the trigger for a reload. Note that software modifications of T3OTL will NOT trigger the reload function. Again, one can select either a positive, a negative, or both a positive and a negative transition of T3OTL to cause a reload. When a selected transition of T3OTL is detected, the core timer T3 is reloaded with the contents of the auxiliary timer, and the interrupt request flag T2IR or T4IR of the respective auxiliary timer is set. Note that the interrupt request flag T3IR of the core timer T3 will also be set, indicating the overflow/underflow of T3. Figure 8.25 shows a block diagram of this reload mode.

Note: Although it is possible, the user should not program both of the auxiliary timers to reload the core timer on the same trigger event, since in this case both of the reload registers would try to reload the core timer at the same time. In this case, the contents of T4 are loaded into the core timer T3.

The reload mode triggered by T3OTL can be used in a number of different configurations. Depending on the selection of the active transition, the following functions can be performed:

If both a positive and a negative transition of T3OTL is selected to trigger a reload, the core timer will be reloaded with the contents of the auxiliary timer each time it overflows or underflows. This is the ‘normal’ reload mode (reload on overflow/underflow).

If either a positive or a negative transition of T3OTL is selected to trigger a reload, the core timer T3 will be reloaded with the contents of the auxiliary timer on every second overflow or underflow.

Using the latter configuration for both auxiliary timers, one can perform very flexible pulse width

Figure 8-26. GPT1 Timer Configuration For PWM Generation

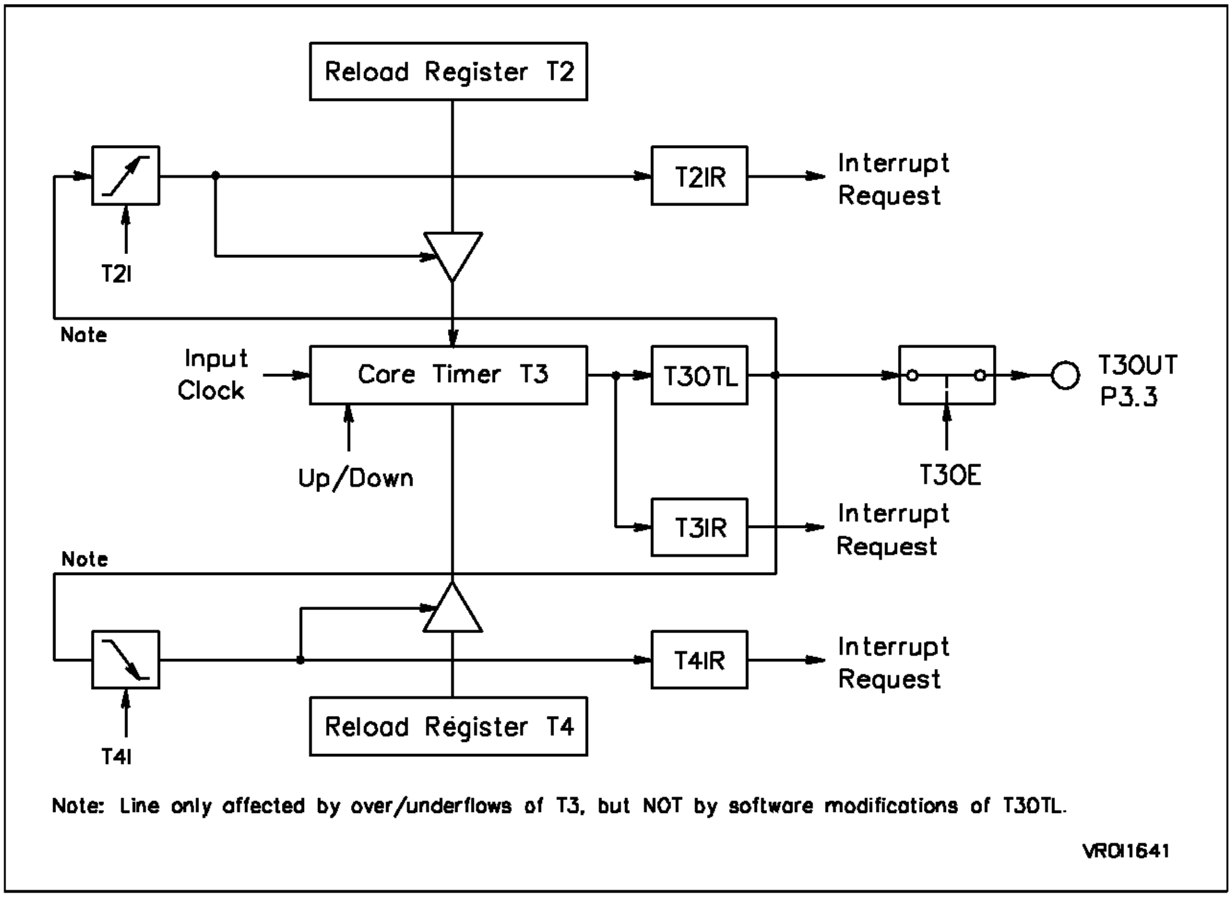
Reload Register T2
T2IR
Interrupt Request
T2I
Note
Input Clock
Core Timer T3
T3OTL
T3OUT P3.3
Up/Down
T3OE
T3IR
Interrupt Request
Note
T4IR
Interrupt Request
Reload Register T4
T4I
Note: Line only affected by over/underflows of T3, but NOT by software modifications of T3OTL.
VR011641

modulation (PWM). One of the auxiliary timers is programmed to reload the core timer on a positive transition of T3OTL, the other is programmed for a reload on a negative transition of T3OTL. Thus, the core timer is alternately reloaded by each of the auxiliary timers.

Figure 8.26 shows such a configuration of the GPT1 timers for flexible PWM. T2 is programmed to reload T3 on a positive transition of T3OTL, while T4 will reload T3 on a negative transition of T3OTL. The alternate output function for T3OTL is enabled (T3OE= ‘1’), and the PWM output signal will be available at pin T3OUT with the configuration DP3.3= ‘1’ and P3.3= ‘1’ for port pin P3.3, as explained in section 8.2.1.1. The auxiliary timer T2 holds the value of the high time of the output signal, while T4 is used to reload T3 with the value of the low time. With this method, the low and high time of the PWM signal can be varied in a wide range. Note that T3OTL is implemented as a bit in SFR

Table 8-12. GPT1 Auxiliary Timers Capture TriggerSelection (x = 2 or 4)

T2I/T4I			Contents of T3 Captured into T2/T4 on
(2)	(1)	(0)	
X	0	0	No transition Selected, Tx Disabled
X	0	1	Positive External Transition on TxIN
X	1	0	Negative External Transition on TxIN
X	1	1	Positive and Negative External Transition on TxIN

T3CON, so that it can be altered by software if required to modify the PWM signal.

8.2.1.2.4 Capture Mode

Capture mode is selected by programming the mode control fields T2M or T4M to ‘101b’. In capture mode, the contents of the core timer are latched into an auxiliary timer register in response to a signal transition at the respective auxiliary timer’s external input pin, which is T2IN/P3.7 for timer register T2, or T4IN/P3.5 for timer register T4. The capture trigger signal can be a positive, a negative, or both a positive and a negative transition.

The two least significant bits of bit fields T2I or T4I are used to select the active transition (see table below), while the most significant bits T2I.2 or T4I.2 are irrelevant for the capture mode. When programmed for capture mode, the respective auxiliary timer T2 or T4 stops, independent of its run flag T2R or T4R.

If a selected transition at the corresponding input pin T2IN or T4IN is detected, then the contents of the core timer are loaded into the auxiliary timer

T2IC (FF60h / B0h)

GPT1 Auxiliary Timer 2 Interrupt Control Register

Reset Value : 0000h

7	6	5	4	3	2	1	0
T2IR	T2IE	ILVL				GLVL	

T4IC (FF64h / B2h)

GPT1 Auxiliary Timer 4 Interrupt Control Register

Reset Value : 0000h

7	6	5	4	3	2	1	0
T4IR	T4IE	ILVL				GLVL	

b7 = **TxIR:** Timer x Interrupt Request Bit.
This flag can be reset to generate an interrupt or trigger a PEC service request.

b6 = **TxIE:** Timer x Interrupt Enable Bit.
If set at ’1’ will enable the timer x interrupt.

b5 to b2 = **ILVL:** Interrupt Priority Level Bits.
See chapter 7 for more details.

b1 to b0 = **GLVL:** Interrupt Group Priority bits.
See chapter 7 for more details.

Figure 8-27. GPT1 Auxiliary Timer in Capture Mode

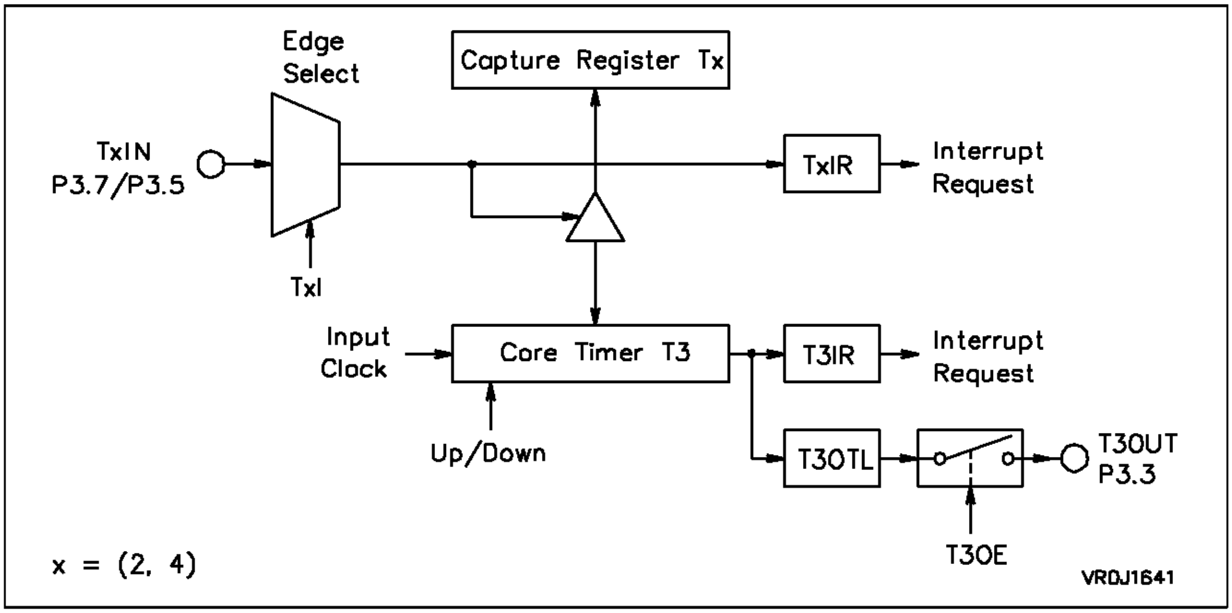

register and the associated interrupt request flag T2IR for timer T2 or T4IR for timer T4 will be set. Note that the direction control bits DP3.7 (for T2IN) and DP3.5 (for T4IN) must be set to ‘0’, and that the level of the capture trigger signal should be held for at least 8 states to ensure correct edge detection. Figure below shows a block diagram of an auxiliary timer in capture mode.

8.2.1.2.5 Interrupt Control

Upon each overflow/underflow or upon each capture or reload trigger of one of the auxiliary timers T2 or T4, its corresponding interrupt request flag (T2IR or T4IR) will be set. This flag may cause an interrupt to the specific auxiliary timer’s interrupt vector (T2INT or T4INT), or initiate a PEC transfer, when the request is enabled. Each of the auxiliary timers T2 and T4 has its own interrupt control register (T2IC, T4IC), as shown in figure below. Refer to chapter 7 for further details on interrupts.

8.2.2 GPT2 Block

Block GPT2 supports high precision event control with a maximum resolution of 200ns (at 40MHz oscillator frequency). It includes the two timers T5 and T6, and the 16-bit capture/reload register CAPREL. Timer T6 is referred to as the core timer, and T5 is referred to as the auxiliary timer of GPT2.

Figure 8-28. SFRs And Port Pins Associated with the GPT2 Block

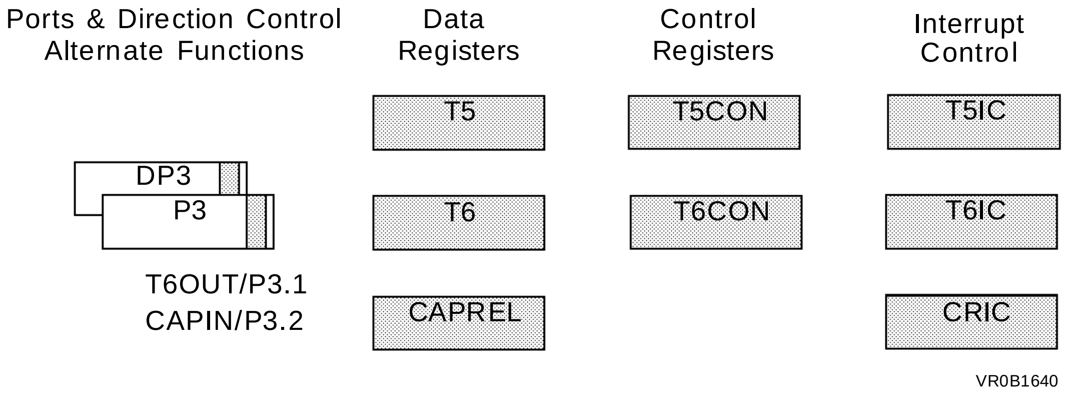

DP3	Port 3 Direction Control Register
P3	Port 3 Data Register
T5	GPT2 Timer 5 Register
T6	GPT2 Timer 6 Register
CAPREL	GPT2 Capture/Reload Register
T5CON	GPT2 Timer 5 Control Register
T6CON	GPT2 Timer 6 Control Register
T5IC	GPT2 Timer 5 Interrupt Control Register
T6IC	GPT2 Timer 6 Interrupt Control Register
CRIC	GPT2 CAPREL Interrupt Control Register

An overflow/underflow of T6, which can only operate in timer mode, is indicated by a toggle bit T6OTL whose state may be output on an alternate function port pin. In addition, T6 may be reloaded with the contents of CAPREL. The toggle bit also supports concatenation of T6 with auxiliary timer T5, while concatenation of T6 with CAPCOM timers T0 and T1 is provided through a direct connection. Based on an external signal, the contents of T5 can be captured into register CAPREL, and T5 may optionally be cleared. Both timer T6 and T5 can count up or down, and the current timer value can be read or modified by the CPU in the non-bit-addressable SFRs T5 and T6. Each of the above features will be described in detail in the following subsections.

From a programmer’s point of view, the GPT2 block is represented by a set of SFRs as shown in figure below. Those portions of port and direction registers which are not used for alternate functions by the GPT2 block are not shaded.

8.2.2.1 GPT2 CORE TIMER T6

The operation of the core timer T6 is controlled by the bit-addressable control register T6CON, is shown below.

The core timer T6 can only run in timer mode. It is started or stopped by software through bit T6R (Timer T6 Run Bit). If T6R= ‘0’, the timer stops. Setting T6R to ‘1’ will start the timer. The count direction can be controlled by software through bit T6UD.

T6CON (FF48h / A4h)

GPT2 Core Timer T6 Control Register T6CON

Reset Value : 0000h

15	14	13	12	11	10	9	8
T6SR	R				T6OTL	T6OE	R

7	6	5	4	3	2	1	0
T6UD	T6R	R			T6I		

b15 = **T6SR:** Timer Reload Mode Enable Bit.
The reload from register CAPREL is enabled if this bit is set at ’1’.

b14 to b11 and b5 to b3 = **R:** Reserved.

b10 = **T6OTL:** Timer 6 Output Toggle Latch.
Toggles on each overflow/underflow of T6.
Can be set or reset by software.

b9 = **T6OE:** Timer 6 Alternate Output Function enabled if T6OE = 1.

b7 = **T6UD:** Timer 6 Up/Down Control.
T6UD = 0. Timer 6 is counting up
T6UE = 1. Timer 6 is counting down.

b6 = **T6R:** Timer 6 Run Bit.
Timer 6 runs if T6R = 1.

b2 to b0 = **T6I:** Timer 6 Input Selection.
See table 8.13.

b2 to b0 = **T6I:** Timer 6 Input Selection.
See table 8.13.

Table 8-13. GPT2 Timer Input Frequencies, Resolution and Periods

f_{OSC} = 40MHz	Timer Input Selection T2I/T3I/T4I							
	000b	**001b**	**010b**	**011b**	**100b**	**101b**	**110b**	**111b**
Prescaler for f_{OSC}	8	16	32	64	128	256	512	1024
Input Frequency	5MHz	2.5MHz	1.25kHz	625kHz	312.5kHz	156.25kHz	78.125kHz	39.06kHz
Resolution	200ns	400ns	800 ns	1.6µs	3.2µs	6.4µs	12.8µs	25.6µs
Period	13ms	26ms	52.5ms	105ms	210ms	420ms	840ms	1.68s

8.2.2.1.1 Timer Mode

Timer T6 is clocked with the internal system clock divided by a programmable prescaler. Eight different prescaler options can be selected by bit field T6I in control register T6CON. The input frequency f_{T6} to timer T6 is scaled linearly with slower oscillator frequencies and is determined as follows:

$$f_{T6} = \frac{f_{OSC}}{8 \times 2^{<T6I>}}$$

The resulting input frequency, resolution, and timer period when using a 40MHz oscillator is illustrated in table 8.13. This table also applies to GPT2 auxiliary timer T5. Note that the numbers may be rounded to 3 significant digits.

An overflow or underflow of timer T6 will clock the toggle bit T6OTL in control register T6CON. T6OTL can also be set or reset by software. Bit T6OE (Alternate Output Function Enable) in register T6CON enables the state of T6OTL to be an alternate function of the external output pin T6OUT/P3.1. For that purpose, a ‘1’ must be written into port data latch P3.1 and pin T6OUT/P3.1 must be configured as output by setting direction control bit DP3.1 to ‘1’. If T6OE= ‘1’, pin T6OUT then outputs the state of T6OTL. If T6OE= ‘0’, pin T6OUT can be used as a general purpose I/O pin.

In addition, T6OTL can be used as the trigger source for the counter function of auxiliary timer T5. For this purpose, the state of T6OTL does not have to be available at pin T6OUT, because an internal connection is provided for this option. This feature is described in detail in section 8.2.2.2 about auxiliary timer T5.

A reload of timer T6 on overflow/underflow with the contents of register CAPREL can be selected through bit T6SR in register T6CON. A detailed description of this option can be found in section 8.2.2.2.3 about the CAPREL register.

T6IC (FF68h / B4h)

GPT2 Timer T6 Interrupt Control Register

Reset Value : 0000h

7	6	5	4	3	2	1	0
T6IR	T6IE	ILVL				GLVL	

An overflow or underflow of timer T6 can also be used to clock timers T0 or T1 in the CAPCOM unit. For this purpose, a direct internal connection between timer T6 and timers T0 and T1 exists. Refer to section 8.1 (CAPCOM Unit) for more details. Figure below shows a block diagram of T6 in timer mode.

8.2.2.1.2 Timer T6 Interrupt Control

When timer T6 overflows from FFFFh to 0000h (when counting up), or when it underflows from 0000h to FFFFh (when counting down), the interrupt request flag T6IR in register T6IC will be set. This will cause an interrupt to the timer T6 interrupt vector T6INT, or will trigger a PEC transfer, if the

Figure 8-29. Block Diagram of GPT2 Core Timer T6 in Timer Mode

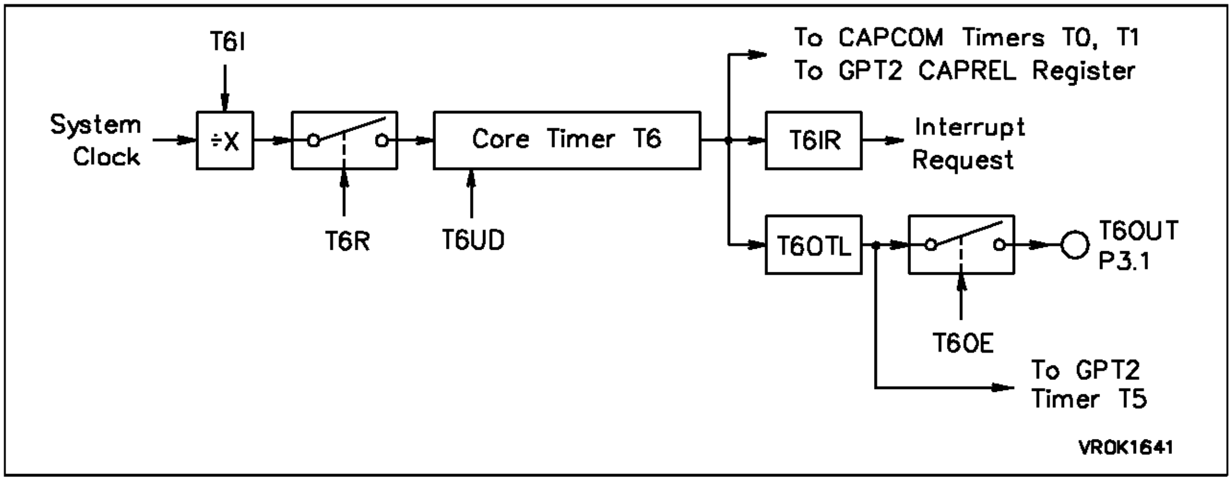

T5CON (FF46h / A3h)

GPT2 Auxiliary Timer T5 Control Register

Reset Value : 0000h

15	14	13	12	11	10	9	8
T5SC	T5CLR	CI		R			

7	6	5	4	3	2	1	0
T5UD	T5R	R		T5M	T5I		

b15 = **T5SC:** Timer 5 Capture Mode Enable Bit.
Capture into register CAPREL is enabled if T5SC = 1.

b14 = **T5CLR:** Timer 5 Clear Bit.
T5CLR = 0. Timer 5 is not cleared on a detected transition at CAPIN
T5CCR = 1. Timer 5 is clear in a detected transition at CAPIN.

b13,b12 = **CI:** Register CAPREL Input Selection.
See table 8.15.

b11 to b8 and b5 to b4 = **R:** Reserved.

b7 = **T5UD:** Timer 5 Up/Down Control Bit.
T5UD = 0. Timer 5 is counting up
T5UD = 1. Timer 5 is counting down.

b6 = **T5R:** Timer 5 Run Bit.
Timer 5 runs if T5R = 1 otherwise stops.

b3 = **T5M:** Timer 5 Mode Control.
If T5M = 0 timer mode is enabled otherwise counter mode is enabled.

b2 to b0 = **T5I:** Timer 5 Input Selection.
See table 8.13 and 8.14 for more details.

interrupt enable bit T6IE in register T6IC is set. The organization of interrupt control register T6IC is shown below. Refer to chapter 7 for more details on interrupts.

8.2.2.2 GPT2 AUXILIARY TIMER T5

The auxiliary timer T5 can operate in timer or counter mode. These two modes are described below. Unlike the core timer T6, the auxiliary timer T5 has no toggle bit and no alternate output function. The operation of T5 is controlled by register T5CON, which is shown in the following subsections.

In both timer and counter mode of operation, the auxiliary timer T5 can count up or down depending on the control bit T5UD, and it can be started or stopped through its run bit T5R (Timer T5 Run Bit). If T5R= ‘0’, the timer stops. Setting T5R= ‘1’ will start the timer.

Figure 8-30. Block Diagram of GPT2 Core Auxiliary Timer T5 in Timer Mode

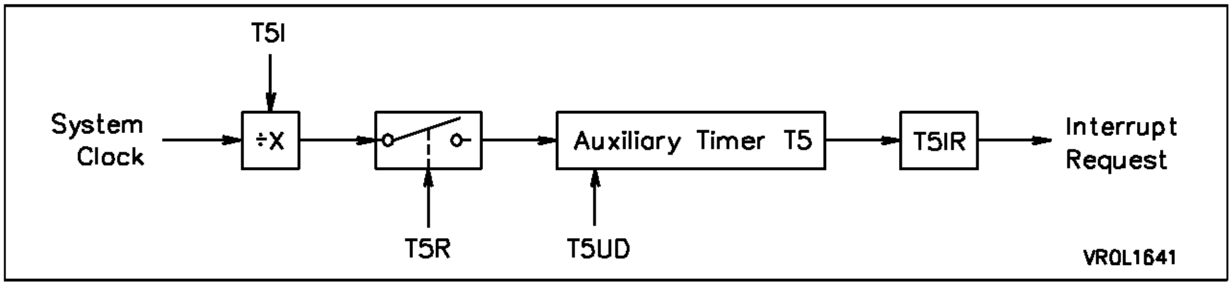

8.2.2.2.1 Timer Mode

In this mode, selected in register T5CON by setting bit T5M='0', the auxiliary timer T5 operates exactly as described for the core timer T6. It has the same 8 prescaler options, which are selected by bit field T5I in control register T5CON. The input frequency f_{T5} to timer T5 is determined as follows:

$$f_{T5} = \frac{f_{OSC}}{8 \times 2^{<T5I>}}$$

The resulting input frequency, resolution, and timer period when using a 40MHz oscillator is the same as for T6 (see table 8.13). Figure 8.30 shows a block diagram of T5 in timer mode.

8.2.2.2.2 Counter Mode

The counter mode of timer T5, selected by T5M= '1', can only be used in conjunction with the toggle bit T6OTL of the core timer T6, since timer T5 has no external input pin. In this mode, timer T5 is clocked by a transition of T6OTL. Note that only state transitions of T6OTL which are caused by overflows/underflows of T6 will trigger the counter function of T5. Modifications of T6OTL by software will NOT trigger the counter function of T5. Either a positive, a negative, or both a positive and a negative transition of T6OTL can be selected to cause an increment or decrement of T5. The options are selected by bit field T5I in control register T5CON

T5IC (FF66h / B3h)

GPT2 Timer 5 Interrupt Control Register

Reset Value : 0000h

7	6	5	4	3	2	1	0
T5IR	T5IE	ILVL				GLVL	

Table 8-14. Auxiliary Timer T5 Counter Mode Input Selection

T5I			Counter T5 is Incremented/Decremented on
(2)	**(1)**	**(0)**	
0	X	X	No Transition Selected, T5 Disabled
1	0	0	No Transition Selected, T5 Disabled
1	0	1	Positive Transition of T6OTL
1	1	0	Negative Transition of T6OTL
1	1	1	Positive and Negative Transition of T6OTL

Figure 8-31. Block Diagram of GPT2 Auxiliary Timer T5 in Counter Mode

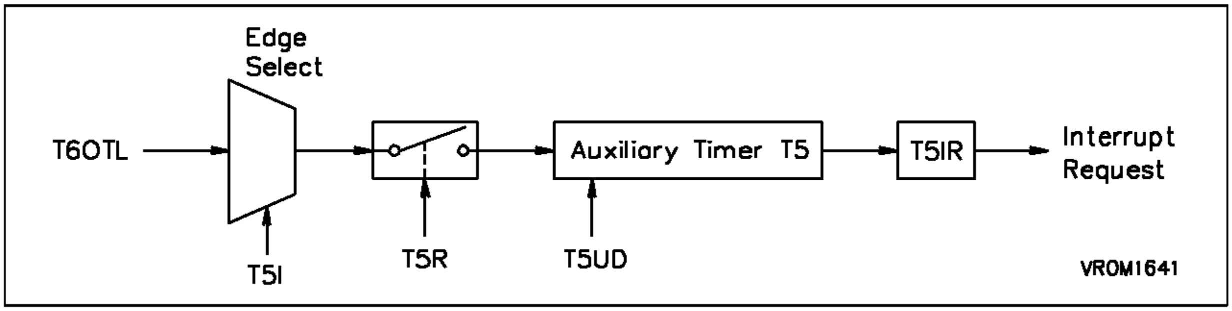

as shown in table 8.14. Figure below shows a block diagram of timer T5 in this mode.

This mode can be used to concatenate the core timer T6 and the auxiliary timer T5 to form a 32-bit or a 33-bit timer (16-bit timer T6+T6OTL+16-bit timer T5, see also section 8.2.1.2.3). The count directions of the two timers are not required to be the same, which offers a wide variety of different configurations. Figure 8.32 shows a block diagram for the concatenation of timers T5 and T6.

8.2.2.2.3 Timer T5 Interrupt Control

When timer T5 overflows from FFFFh to 0000h (when counting up), or when it underflows from 0000h to FFFFh (when counting down), the interrupt request flag T5IR in register T5IC will be set. This will cause an interrupt to the timer T5 interrupt vector T5INT, or will trigger a PEC transfer, if the interrupt enable bit T5IE in register T5IC is set. The organization of interrupt control register T5IC is described below. Refer to Chapter 7 for more details on interrupts.

Table 8-15. Register CAPREL Capture Trigger Selection

CI		Contents of T5 Captured into CAPREL on
(1)	(0)	
0	0	No Transition Selected, Capture Disabled
0	1	Positive External Transition on CAPIN
1	0	Negative External Transition on CAPIN
1	1	Positive and Negative Transition Ext. on CAPIN

Figure 8-32. Concatenation of Timers T5 and T6

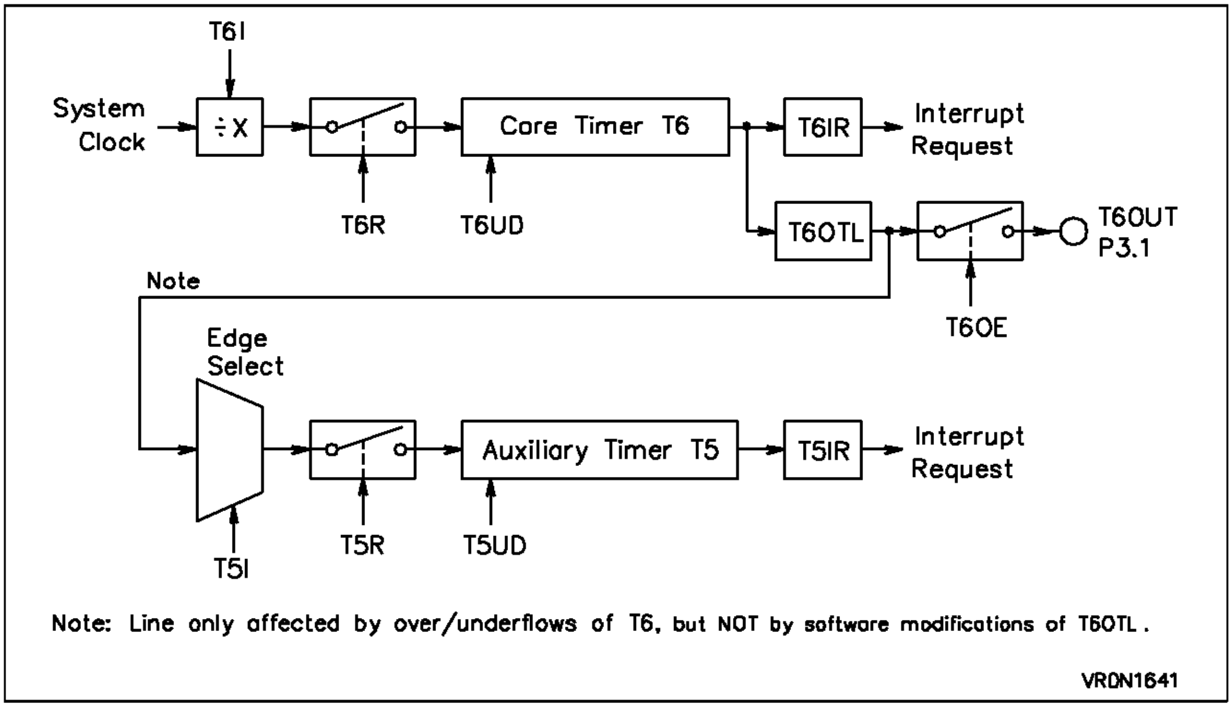
T6I
System Clock
÷X
Core Timer T6
T6IR
Interrupt Request
T6R
T6UD
T6OTL
T6OUT P3.1
T6OE
Note
Edge Select
Auxiliary Timer T5
T5IR
Interrupt Request
T5I
T5R
T5UD

Note: Line only affected by over/underflows of T6, but NOT by software modifications of T6OTL.

VR0N1641

8.2.2.3 GPT2 CAPTURE/RELOAD REGISTER CAPREL

This 16-bit register can be used as a capture register for the auxiliary timer T5 or as a reload register for the core timer T6, or as both. These functions are controlled separately by bits in the two timer control registers T5CON and T6CON. In the following, the use of register CAPREL in capture and reload mode is described in detail.

8.2.2.3.1 Capture Mode

This mode is selected by setting bit T5SC= '1' in control register T5CON. The source for a capture trigger is the external input pin CAPIN, which is an alternate input function of port pin P3.2. Either a positive, a negative, or both a positive and a negative transition at this pin can be selected to trigger the capture function. The active edge is controlled by bit field CI in register T5CON according to table below.

For triggering a capture operation on register CAPREL, pin CAPIN/P3.2 must be configured as input by setting its direction control bit DP3.2 to '0'. The maximum input frequency for the capture trigger signal at pin CAPIN is f_{OSC} /8 (2.5MHz at f_{OSC} =40MHz). To ensure that a transition of the capture trigger signal is correctly recognized, its level should be held for at least 4 state times before it changes.

Figure 8-33. Register CAPREL In Capture Mode

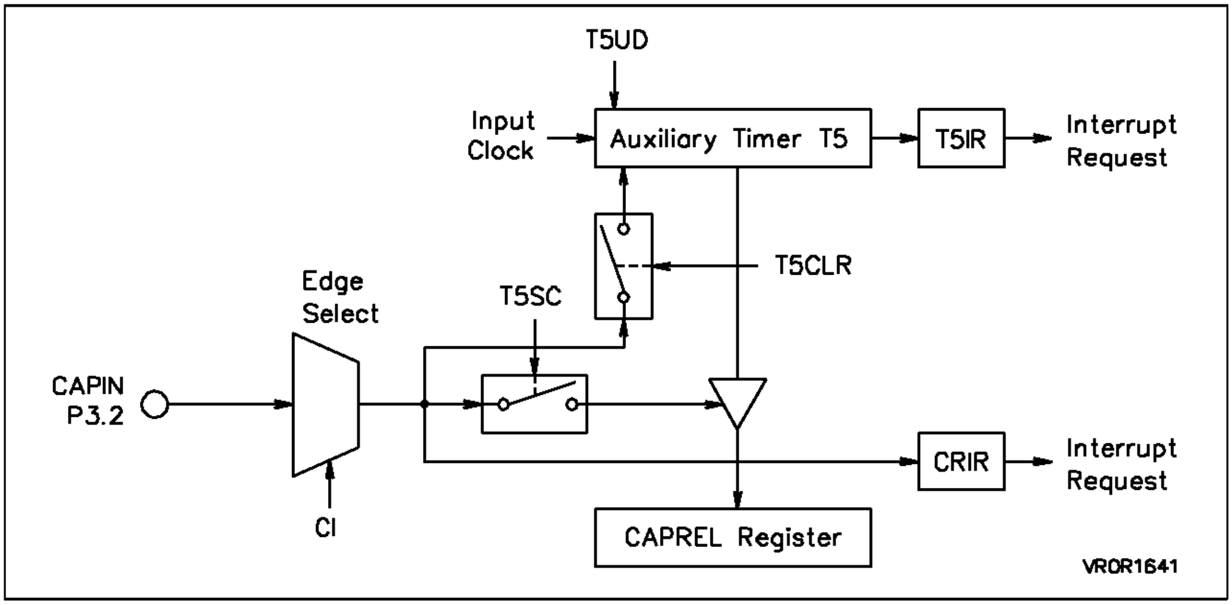
T5UD
Input Clock
Auxiliary Timer T5
T5IR
Interrupt Request
T5CLR
Edge Select
T5SC
CAPIN P3.2
CI
CRIR
Interrupt Request
CAPREL Register
VR0R1641

When a selected transition at the external input pin CAPIN is detected, the contents of the auxiliary timer T5 are latched into register CAPREL, and interrupt request flag CRIR is set. With the same detected transition at CAPIN, timer T5 can be cleared to 0000h. This option is controlled by bit T5CLR in register T5CON. The timer T5 clear function can be selected regardless of the capture function. To ensure that a transition of the clear trigger signal is correctly recognized, its level should be held for at least 4 state times. Once timer T5 is cleared, the interrupt request flag CRIR in register CRIC is set. Figure below shows a block diagram of register CAPREL in capture mode.

Note that bit T5SC only controls whether a capture is performed or not. If T5SC='0', the input pin CAPIN can still be used as an external interrupt input (see also section 7.2.7). This interrupt is controlled by the CAPREL interrupt control register CR IC described in section 8.2.2.3.3 .

8.2.2.3.2 Reload Mode

CRIC (FF6Ah / B5h)

CAPREL Register Interrupt Control Register

Reset Value : 0000h

7	6	5	4	3	2	1	0
CRIR	CRIE	ILVL				GLVL	

Figure 8-34. Register CAPREL In Reload Mode

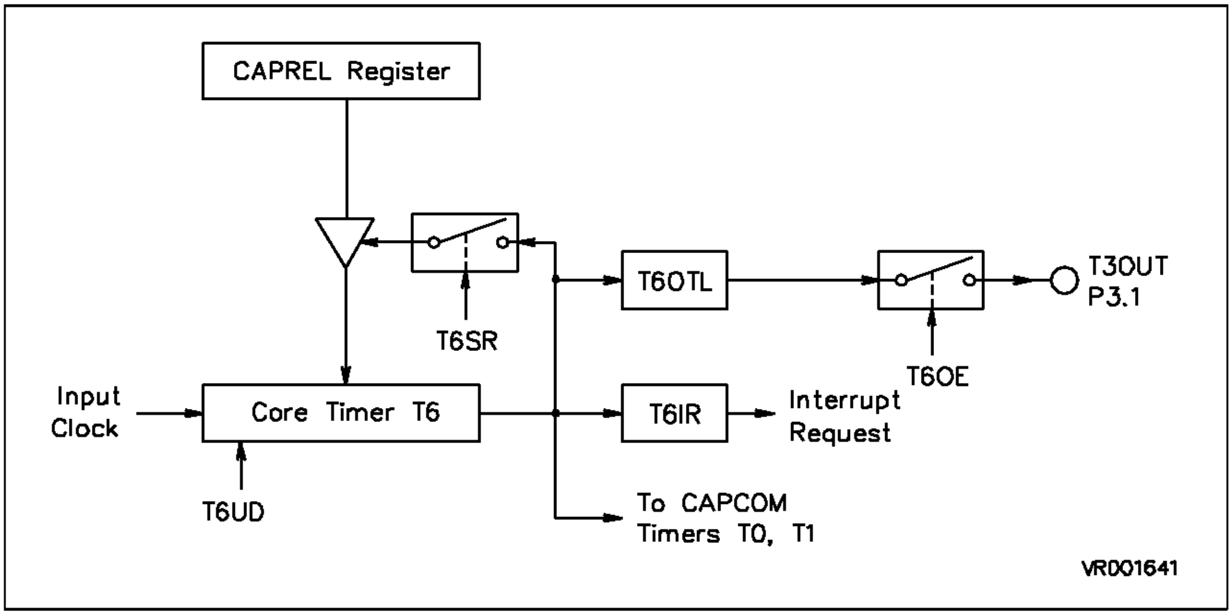

This mode is selected by setting bit T6SR= ‘1’ in register T6CON. The event causing a reload in this mode is an overflow or underflow of the core timer T6.

If T6SR= ‘1’ when timer T6 overflows from FFFFh to 0000h (when counting up) or when it underflows from 0000h to FFFFh (when counting down), the value stored in register CAPREL is loaded into timer T6. This will not set the interrupt request flag CRIR associated with the CAPREL register. However, interrupt request flag T6IR will be set indicating the overflow/underflow of T6. Figure below shows a block diagram of the reload mode of register CAPREL.

8.2.2.3.3 CAPREL Register Interrupt Control

Whenever a transition according to the selection in bit field CI is detected at pin CAPIN/P3.2, interrupt request flag CRIR in register CRIC is set. This will cause an interrupt to the CAPREL register interrupt vector CRINT, or will trigger a PEC service if the interrupt enable bit CRIE in register CRIC is set. The organization of register CRIC is described below. Refer to chapter 7 for more details on interrupts.

8.2.2.3.4 Using the Capture and Reload Mode

Since the reload and the capture mode of register CAPREL can be configured individually by bits T5SC and T6SR, one can set both bits to use the two modes of register CAPREL simultaneously. This feature can be used to build a digital PLL configuration which generates an output frequency that is a multiple of the input frequency, as described in the following. Figure below shows a block diagram of this configuration. The operation in this mode will be explained with an example.

Consider the case, where one has to detect consecutive external events which may occur aperiodically, but needs a finer resolution, that means, more ‘ticks’ within the time between two external events.

For this purpose, one measures the time between the external events using timer T5 and the CAPREL register. Timer T5 runs in timer mode counting up (T5UD= ‘0’) with a frequency of for example f_{OSC} /64. The external events are applied to pin CAPIN. When

Figure 8-35. Register CAPREL In Capture And Reload Mode

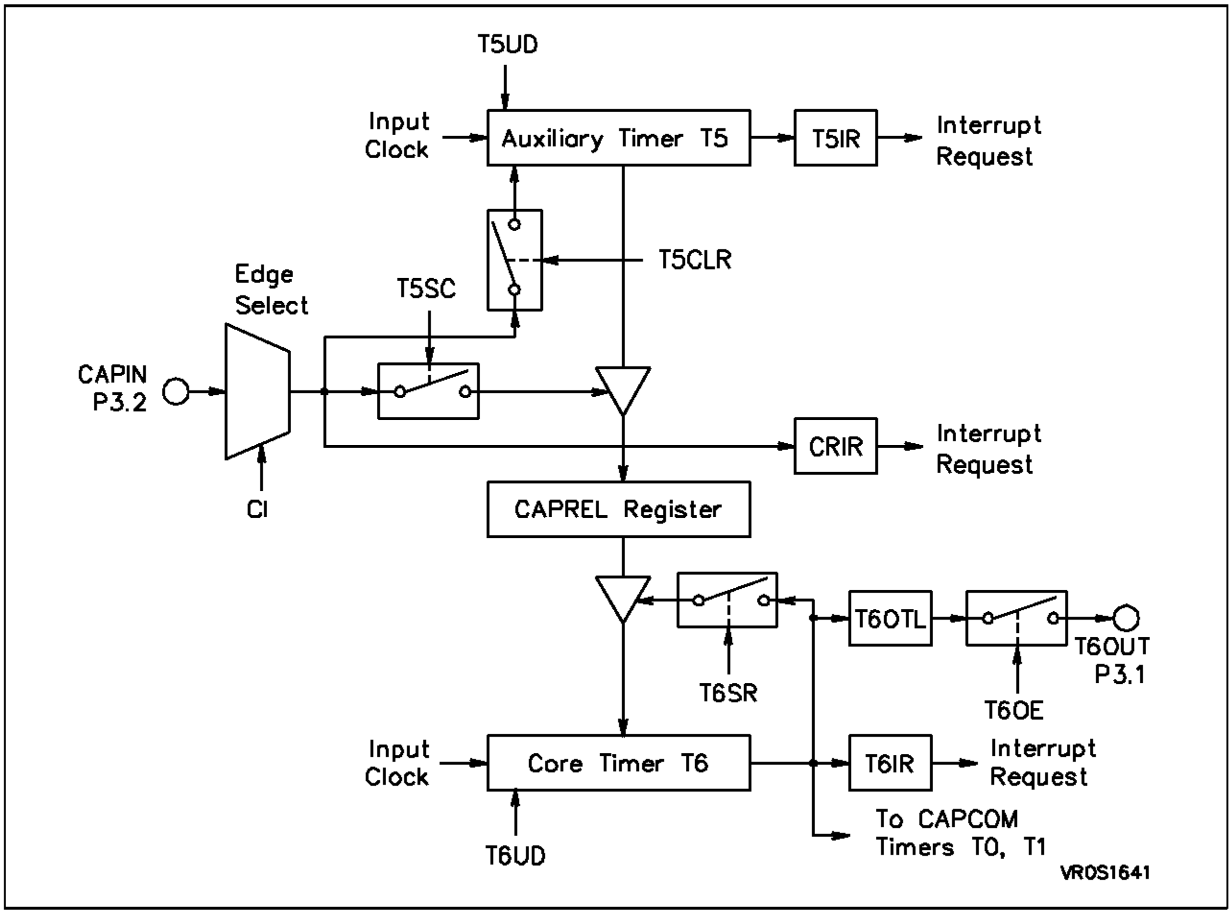
T5UD
Input Clock
Auxiliary Timer T5
T5IR
Interrupt Request
T5CLR
Edge Select
T5SC
CAPIN P3.2
CI
CRIR
Interrupt Request
CAPREL Register
T6OTL
T6OUT P3.1
T6SR
T6OE
Input Clock
Core Timer T6
T6IR
Interrupt Request
To CAPCOM Timers T0, T1
T6UD
VR0S1641

an external event occurs, the timer T5 contents are latched into register CAPREL, and timer T5 is cleared (T5CLR= ‘1’). Thus, register CAPREL always contains the correct time between two events, measured in timer T5 increments. Timer T6, which runs in timer mode counting down (T6UD= ‘1’) with a frequency of for example f_{OSC} /8, uses the value in register CAPREL to perform a reload on underflow. This means, the value in register CAPREL represents the time between two underflows of timer T6, now measured in timer T6 increments. Since timer T6 runs 8 times faster than timer T5, it will underflow 8 times within the time between two external events. Thus, the underflow signal of timer T6 generates 8 ‘ticks’. Upon each underflow, interrupt request flag T6IR will be set and bit T6OTL will be toggled. The state of T6OTL may be output on pin T6OUT. This signal has 8 times more transitions than the signal which is applied to pin CAPIN.

The underflow signal of timer T6 can furthermore be used to clock the CAPCOM timers T0 and/or T1, which gives the user the possibility to set compare events based on a finer resolution than that of the external events.

8.3 A/D CONVERTER (ADC)

Figure 8-36. A/D Converter Block Diagram

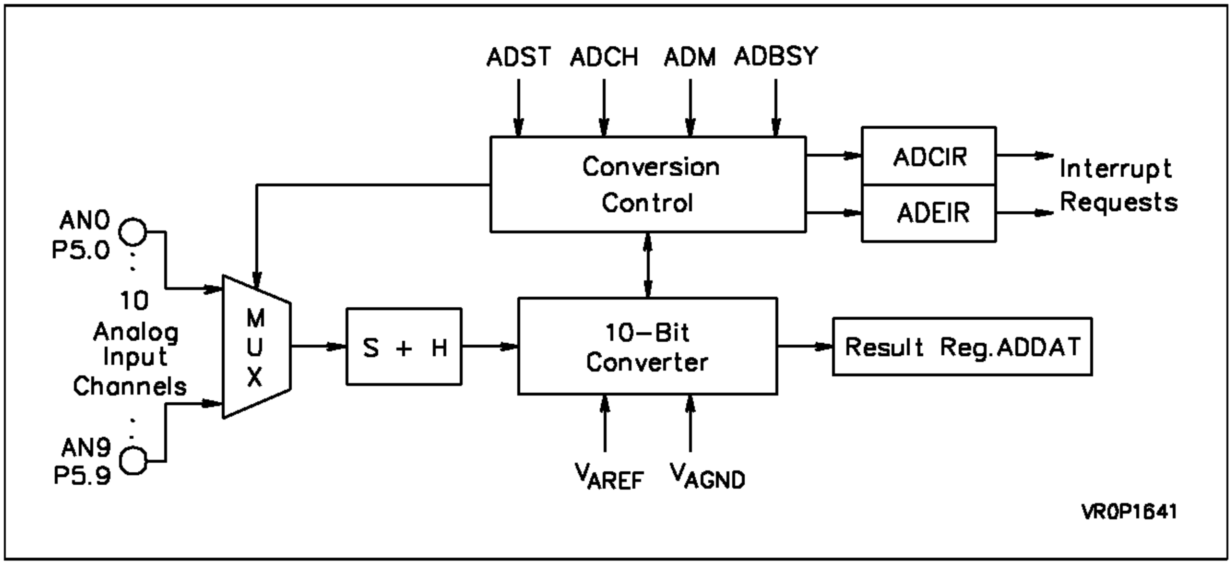
ADST
ADCH
ADM
ADBSY
Conversion Control
ADCIR
ADEIR
Interrupt Requests
AN0
P5.0
10 Analog Input Channels
AN9
P5.9
MUX
S + H
10-Bit Converter
Result Reg.ADDAT
V_{AREF}
V_{AGND}
VR0P1641

The ST10x166 provides a 10-bit A/D converter with 10 multiplexed analog input channels and a sample & hold circuit on-chip. It supports 4 different conversion modes, including single channel, single channel continuous, auto scan, and auto scan continuous conversion. The external analog reference voltages V_{AREF} and V_{AGND} are fixed. Figure below shows a block diagram of the A/D converter.

In the following Figure 8.37, all SFRs and port pins are listed which are associated with the A/D converter.

8.3.1 Conversion Modes and Operation

The analog input channels AN0 through AN9 are alternate functions of port 5, which is a 10-bit input only port. The port 5 lines may either be used as analog or digital inputs. No special action is required by the user software to configure the port 5 lines as analog inputs.

The functions of the A/D converter are controlled by the A/D Converter Control Register ADCON. This bit-addressable register holds the bits which specify the analog channel, the conversion mode, and the status of the converter.

Figure 8-37. SFRs and Port pins Associated with the A/D Converter

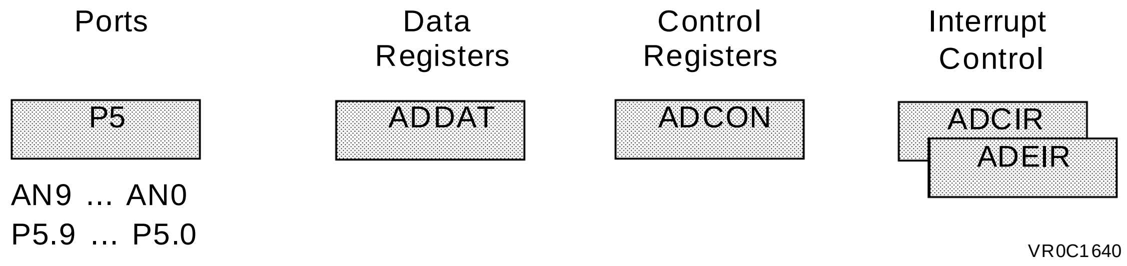

P5	Port 5 Data Register
ADDAT	A/D Converter Result Register
ADCON	A/D Converter Control Register
ADCIC	A/D Converter End of Conversion Interrupt Control Register
ADEIC	A/D Converter Overrun Error Interrupt Control Register

Table 8-16. Conversion Mode Selection

ADM		Conversion Mode
(1)	**(0)**	
0	0	Single Channel Conversion
0	1	Single Channel Continuous Conversion
1	0	Auto Scan Conversion
1	1	Auto Scan Continuous Conversion

ADDAT (FEA0h / 50h)

A/D Converter Result Register

Reset Value: 0000h

15	14	13	12	11	10	9	8
CHNR				R		ADRES [9..8]	

7	6	5	4	3	2	1	0
ADRES [7..0]							

b15 to b12 = **CHNR:** 4-Bit Channel Number.

b11 and b10 = R: Reserved.

b9 to b0 = **ADRES:** 10-Bit Result of the A/D Conversion.

ADCON (FFA0h / D0h)

A/D Converter Control Register

Reset Value: 0000h

15	14	13	12	11	10	9	8
R							ADBSY

7	6	5	4	3	2	1	0
ADST	R	ADM		ADCH			

b15 to b9 and b6 =**R:** Reserved.

b8 = **ADBSY:** ADC Busy Flag
Read only bit.
Indicates if a conversion is in progress or not.

b7 = **ADST:** Start Bit.
Is used to start or stop the A/D Converter.

b5 to b4 = **ADM:** Mode Selection bit.
Determines the mode of operation of the A/D Converter as illustrates in table 8.16.

b3 to b0 = **ADCH:** ADC Analog Input Channel Selection.
See table 8.17.

Table 8-17. Analog Input Channel Selection

ADCH				Selected Channel
(3)	(2)	(1)	(0)	
0	0	0	0	AN0 : Analog Input Channel 0
0	0	0	1	AN1 : Analog Input Channel 1
0	0	1	0	AN2 : Analog Input Channel 2
0	0	1	1	AN3 : Analog Input Channel 3
0	1	0	0	AN4 : Analog Input Channel 4
0	1	0	1	AN5 : Analog Input Channel 5
0	1	1	0	AN6 : Analog Input Channel 6
0	1	1	1	AN7 : Analog Input Channel 7
1	0	0	0	AN8 : Analog Input Channel 8
1	0	0	1	AN9 : Analog Input Channel 9
1	0	1	X	(reserved, no channel selected)
1	1	X	X	(reserved, no channel selected)

Bit ADST is used to start or stop the A/D converter. The busy flag ADBSY is a read-only flag which indicates whether a conversion is in progress or not. Bit field ADM determines the mode of operation of the A/D converter as illustrated in table 8.16. These modes will be discussed in detail in the following subsections.

Bit field ADCH in register ADCON specifies the analog input channel which is to be converted in the single channel conversion modes, or the channel with which a conversion sequence of different channels will be started in the auto scan modes. Table 8.17 shows the reference between the ADCH field and the selected input channels. Programming ADCH to one of the reserved combinations will produce invalid results.

The A/D Converter Result Register ADDAT, shown in figure below holds the result of a conversion. The low order 10 bits (ADDAT [9..0]) contain the converted digital result, while the upper four bits (ADDAT [15..12]) represent the number of the channel which was converted. Register ADDAT is not bit-addressable. The data remains in ADDAT until it is overwritten by the data of the next conversion.

In all 4 conversion modes, a conversion is started by setting bit ADST= ‘1’. This will also set the busy flag ADBSY. The converter then selects and samples the input channel specified by the channel selection field ADCH in register ADCON. This will take 1.575µs (at 40MHz oscillator frequency). The sampled level will then be held internally for the rest of the conversion, which will require another 8.175µs (at 40 MHz). When the conversion of this channel is complete, the 10-bit result together with the number of the converted channel is transferred into the result register ADDAT, and the interrupt request flag ADCIR will be set. If a previous conversion result was not read out of register ADDAT by the time a new conversion is complete, then the A/D overrun error interrupt request flag ADEIR will also be set. The previous result in register ADDAT is lost because it is overwritten by the new value.

If bit ADST is reset and then set again while a conversion is in progress, this conversion will be aborted and the converter will start again. When setting bit ADST, a different conversion mode and channel number may be specified. While a conversion is in progress modifications to the mode selection field ADM will not become effective until the next conversion. Modifications to the channel selection field ADCH will not become effective until the next conversion in the single channel conversion modes, or the next conversion round in the auto scan modes.

8.3.1.1 SINGLE CHANNEL CONVERSION MODE

This mode is selected by programming the mode selection field ADM in register ADCON to '00b'. After starting the converter through bit ADST, the channel specified in bit field ADCH will be converted. After the conversion is complete, interrupt request flag ADCIR will be set and the converter will automatically stop and reset bits ADBSY and ADST. Resetting bit ADST while a conversion is in progress has no effect.

8.3.1.2 SINGLE CHANNEL CONTINUOUS CONVERSION

This mode is selected by bit combination '01b' in bit field ADM. After starting the converter, the specified channel will be converted repeatedly until the converter is stopped by software. Interrupt request flag ADCIR is set at the end of each single conversion. When bit ADST is reset by software, the converter will complete the current conversion and then stop and reset bit ADBSY.

8.3.1.3 AUTO SCAN CONVERSION MODE

With this mode, a set of different analog input channels can be converted without requiring software to change the channel number. The channels are converted consecutively, starting with channel ANn which is specified in bit field ADCH, down to and including channel AN0. The auto scan conversion mode is selected by '10b' in bit field ADM. After conversion of channel ANn has been completed, interrupt request flag ADCIR is set and the converter starts to convert channel ANn-1. This procedure is repeated until conversion of channel AN0 is complete. The A/D converter then stops and resets bits ADST and ADBSY. Resetting bit ADST while a conversion is in progress has no effect.

8.3.1.4 AUTO SCAN CONTINUOUS CONVERSION

This mode is selected by setting field ADM in register ADCON to '11b'. The auto scan continuous mode differs from the auto scan mode described in the previous section only in that the converter does not stop after the conversion of channel AN0 is completed. The internal channel number counter is reloaded with the channel number which is specified in register ADCON, and the conversion round is started again. This procedure is repeated until the converter is stopped by software. When bit ADST is reset by software, the converter will continue until the conversion of channel AN0 is complete. It will then stop and reset bit ADBSY.

8.3.2 A/D Converter Interupt Control

At the end of each conversion, interrupt request flag ADCIR in interrupt control register ADCIC is set. This end-of-conversion interrupt request may cause an interrupt to vector ADCINT, or it may trigger a PEC data transfer which stores the conversion result from register ADDAT e.g. into a table in the internal RAM for later evaluation. Note that the number of the converted channel is contained in the four most significant bits in register ADDAT.

When the conversion result has not been read out of register ADDAT at the time the next conversion is complete, the previous result will be overwritten and interrupt request flag ADEIR in register ADEIC will be set. This overrun error interrupt request of the A/D converter may be used to cause an interrupt to vector ADEINT. The interrupt control registers which are associated with the A/D converter are described below. For more details on interrupts refer to chapter 7.

8.4 SERIAL CHANNELS

For serial communication with other microcontrollers, microprocessors, and external peripherals, the ST10x166 has two identical serial interfaces

ADCIC (FF98h / CCh)
Interrupt Control Registers
Reset Value: 0000h

7	6	5	4	3	2	1	0
ADCIR	ADCIE	ILVL				GLVL	

ADEIC (FF9Ah / CDh)
Interrupt Control Registers
Reset Value: 0000h

7	6	5	4	3	2	1	0
ADEIR	ADEIE	ILVL				GLVL	

Figure 8-38. SFRs And Port Pins Associated With The Serial Channels

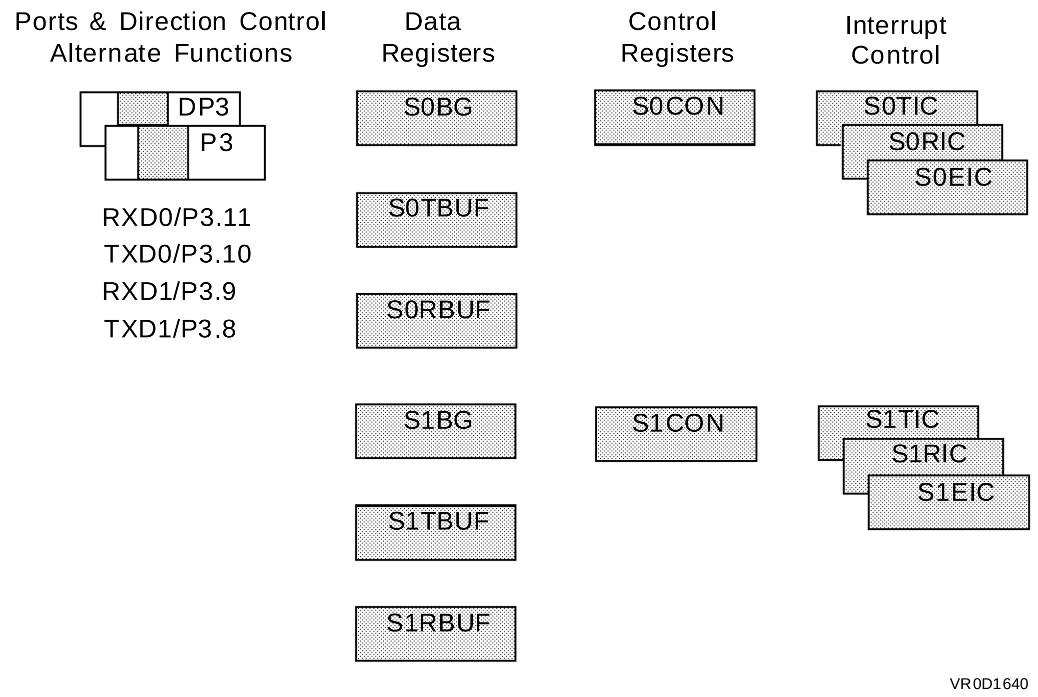
Ports & Direction Control
Alternate Functions
Data Registers
Control Registers
Interrupt Control
DP3
P3
RXD0/P3.11
TXD0/P3.10
RXD1/P3.9
TXD1/P3.8
S0BG
S0TBUF
S0RBUF
S1BG
S1TBUF
S1RBUF
S0CON
S1CON
S0TIC
S0RIC
S0EIC
S1TIC
S1RIC
S1EIC
VR0D1640

DP3	Port 3 Direction Control Register
P3	Port 3 Data Register
S0BG	Serial Channel 0 Baud Rate Generator/Reload Register
S0TBUF	Serial Channel 0 Transmit Buffer Register (write only)
S0RBUF	Serial Channel 0 Receive Buffer Register (read only)
S1BG	Serial Channel 1 Baud Rate Generator/Reload Register
S1TBUF	Serial Channel 1 Transmit Buffer Register (write only)
S1RBUF	Serial Channel 1 Receive Buffer Register (read only)
S0CON	Serial Channel 0 Control Register
S1CON	Serial Channel 1 Control Register
S0TIC	Serial Channel 0 Transmit Interrupt Control Register
S0RIC	Serial Channel 0 Receive Interrupt Control Register
S0EIC	Serial Channel 0 Error Interrupt Control Register
S1TIC	Serial Channel 1 Transmit Interrupt Control Register
S1RIC	Serial Channel 1 Receive Interrupt Control Register
S1EIC	Serial Channel 1 Error Interrupt Control Register

on-chip, Serial Channel 0 (ASC0) and Serial Channel 1 (ASC1). They support full-duplex asynchronous communication up to 625KBaud and half-duplex synchronous communication up to 2.5MBaud. In the synchronous mode, data are transmitted or received synchronous to a shift clock which is generated by the ST10x166. In the asynchronous mode, 8 or 9-bit data transfer, parity generation, and the number of stop bits can be selected. The reception of data is double-buffered. Parity, framing, and overrun error detection is provided to increase the reliability of data transfers. For multiprocessor communication, a mechanism to distinguish address from data bytes is included, and a loop-back option is available for testing purposes. Each serial channel has separate interrupt vectors for receive, transmit, and error, and each channel has its own dedicated baud rate generator. This is a 13-bit timer with a 13-bit reload register which supports a wide range of baud rates without oscillator tuning.

Figure 8.38 gives an overview of the SFRs and port pins which are associated with the serial channels. Those portions of Port 3 and its direction control register DP3 which are not used for alternate functions by the serial channels are not shaded.

8.4.1 Modes of Operation

The operation of the serial channels ASC0 and ASC1 is controlled by the bit-addressable control registers S0CON and S1CON, which are shown below. They contain control bits for mode and error

S0CON (FFB0h / D8h)

Serial Channel Control Register S0CON

Reset Value: 0000h

15	14	13	12	11	10	9	8
S0R	S0LB	S0BRS	R		S0OE	S0FE	S0PE

7	6	5	4	3	2	1	0
S0OEN	S0FEN	S0PEN	S0REN	S0STP	S0M		

S1CON (FFB8h / DCh)

Serial Channel Control Register S1CON

Reset Value: 0000h

15	14	13	12	11	10	9	8
S1R	S1LB	S1BRS	R		S1OE	S1FE	S1PE

7	6	5	4	3	2	1	0
S1OEN	S1FEN	S1PEN	S1REN	S1STP	S1M		

b15 = **SxR:** ASCx Baud Rate Generator Run Bit.
The Baud Rate Generator is enabled if SxR = 1.

b14 = **SxLB:** Loop Back Mode Enable Bit.
The Loop Back Mode is enabled if SxLB = 1.

b13 = **SxBRS:** Baud Rate Selection Bit.
The current baud rate is multiplied by 2/3 if SxBRS=1.

b12 to b11 = **R:** Reserved.

b10 = **Sx0E:** Overrun Error Flag.
Set by hardware when an overrun error occurs and SxOEN = 1. Must be reset by software.

b9 = **SxFE:** Framing Error Flag.
Set by hardware when a framing error occurs and SxFEN = 1; Must be reset by software.

b8 = **SxPE:** Parity Error Flag.
Set by hardware when a parity error occurs and SxPEN = 1; Must be reset by software.

b7 = **SxOEN:** Overrun Check Enable Bit.
SxOEN = 0: Overrun Check Disabled
SxOEN = 1: Overrun Check Enabled.

b6 = **SxFEN:** Framing Check Enable Bit.
SxFEN = 0: Framing Check Disabled
SxFEN = 1: Framing Check Enabled.

b5 = **SxPEN:** Parity Check Enable Bit.
SxPEN = 0: Parity Check Disabled
SxPEN = 1: Parity Check Enabled.

b4 = **SxREN:** Receiver Enable Bit.
Used to Initiate Reception. Reset by hardware after a byte in synchronous mode has been received.

b3 = **SxSTP:** Number of Stop Bits Selection.
SxSTP = 0: One Stop Bit
SxSTP = 1: Two Stop Bits.

b2 to b0 = **SxM:** ASCx Mode Control.
(see table 8.18).

Table 8-18. Serial Channel Modes of Operation

S0M/S1M			Mode
(2)	**(1)**	(0)	
0	0	1	8-bit data, asynchronous operation
0	1	1	7-bit data + parity bit, asynchronous operation
1	0	0	9-bit data, asynchronous operation
1	0	1	8-bit data + wake-up bit, asynchronous operation
1	1	1	8-bit data + parity bit, asynchronous operation
0	0	0	8-bit data, asynchronous operation
X	1	0	(reserved)

check selection, and status flags for error identification.

Serial data transmission or reception is only possible when the Baud Rate Generator Run Bit S0R or S1R for the respective channel is set to ‘1’. The individual operating mode for each channel is determined by the mode control fields S0M and S1M in registers S0CON and S1CON as shown in Table 8.18. These fields may not be programmed to one of the reserved combinations, otherwise unpredictable results may occur.

A transmission will be performed by writing the data to be transmitted into the associated Transmit Buffer register S0TBUF or S1TBUF. In general, any instruction or PEC data transfer operation which uses these registers as destination will initiate a transmission. Note that S0TBUF and S1TBUF are non bit-addressable WRITE ONLY registers, and that only the number of data bits which is determined by the selected operating mode will actually be transmitted. This means that the bits written to positions 9 through 15 of registers S0TBUF and S1TBUF are always insignificant. After a transmission has been completed, the transmit buffer registers are cleared to 0000h.

Data reception is enabled by the Receiver Enable Bits S0REN and S1REN, respectively. After reception of a character has been completed, the received data and, if provided by the selected operating mode, the received parity bit can be read from the Receive Buffer registers S0RBUF or S1RBUF of the associated serial channel. These registers are non bit addressable READ ONLY registers. Bits in the upper half of S0RBUF and S1RBUF which are not significant for the selected operating mode will be read as zeros.

Data reception is double-buffered, so that reception of a second character may already begin before the previously received character has been read out of the receive buffer register. In all modes, receive buffer overrun error detection can be selected through bits S0OEN and S1OEN. When enabled, the overrun error status flag S0OE or S1OE and the error interrupt request flag S0EIR or S1EIR for the respective channel will be set when the receive buffer register has not been read by the time reception of a second character is complete. The

Figure 8-39. Serial Channel Asynchronous Mode Block Diagram

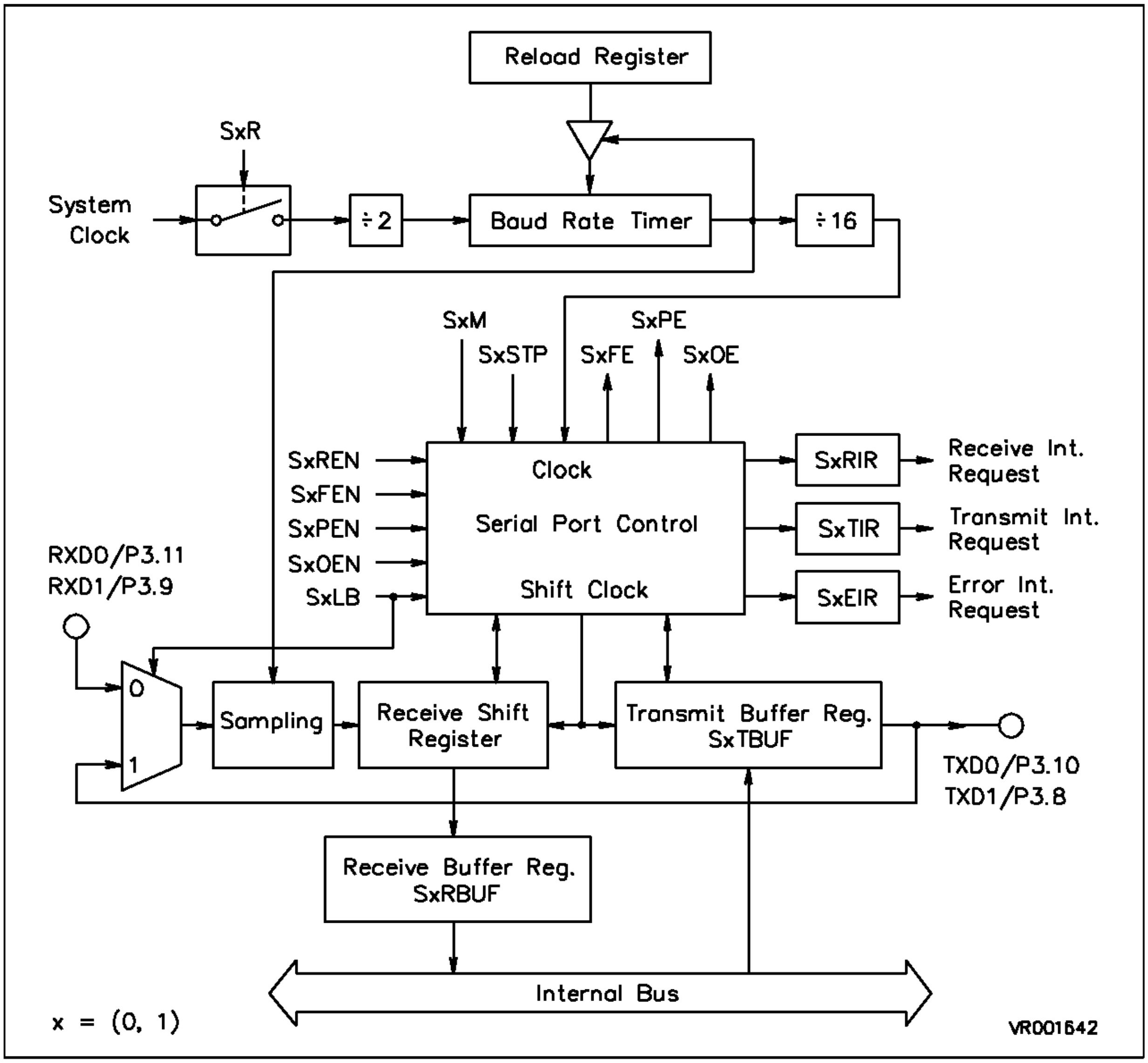
Reload Register
SxR
System Clock
÷2
Baud Rate Timer
÷16
SxM
SxSTP
SxFE
SxPE
SxOE
SxREN
SxFEN
SxPEN
SxOEN
SxLB
Clock
Serial Port Control
Shift Clock
SxRIR
Receive Int. Request
SxTIR
Transmit Int. Request
SxEIR
Error Int. Request
RXD0/P3.11
RXD1/P3.9
0
1
Sampling
Receive Shift Register
Transmit Buffer Reg. SxTBUF
TXD0/P3.10
TXD1/P3.8
Receive Buffer Reg. SxRBUF
Internal Bus
x = (0, 1)
VR001642

previously received character in the receive buffer is overwritten.

In each of the operating modes provided by the serial channels of the ST10x166, a loop-back option can be selected through bits S0LB or S1LB. This option allows to simultaneously receive the data which are being transmitted by the ST10x166. To increase the range of programmable baud rates for the two serial interfaces, a baud rate selection option can be selected through S0BRS or S1BRS. The current baud rate will be multiplied by 2/3. All operating modes of the serial channels will be described in detail in the following subsections.

8.4.1.1 ASYNCHRONOUS OPERATION

In asynchronous operation, full-duplex communication is supported. The same operating mode and baud rate is used for both transmission and reception. Each serial channel of the ST10x166 has two pins associated with it which are alternate functions of port 3 pins. RXD0/P3.11 and TXD0/P3.10 are used by ASC0 in asynchronous operation as re-

Figure 8-40. 8-Bit Data Frame

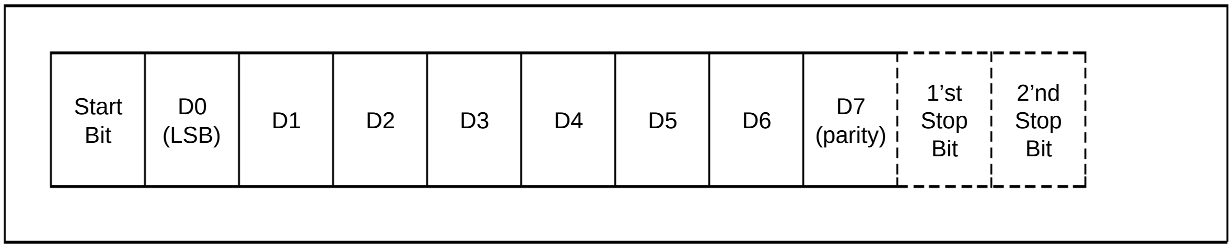

Figure 8-41. 9-Bit Data Frame

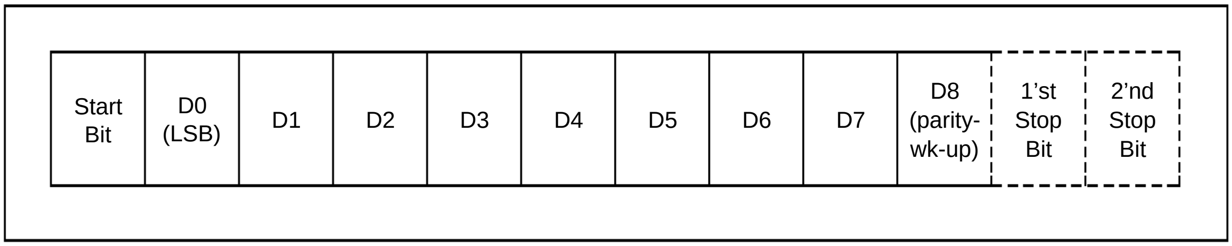

ceive data input and transmit data output pins, respectively, while RXD1/P3.9 and TXD1/P3.8 are used by ASC1. Figure 8.39 shows a block diagram of a serial channel in the asynchronous mode of operation.

Information Frames in Asynchronous Operation

Each information frame that can be transmitted or received by the serial channels in asynchronous operation consists of the following elements:

- One start bit
- An 8-bit or 9-bit data frame, selected by bit fields S0M/S1M
- One or two stop bits, selected by bits S0STP/S1STP in control registers S0CON/S1CON

Figure 8.40 shows an information frame with an 8-bit data frame. D0 to D6 are data bits. D7 can be configured as the 8th data bit (8-bit data mode) or as the parity bit (7 -bit data +parity bit mode).

Figure 8.41 shows an information frame with a 9-bit data frame. D0 to D7 are data bits. D8 can be configured to either be the 9th data bit (9-bit data mode), the parity bit (8-bit data + parity bit mode), or the special wake-up bit used in multiprocessor communication (8-bit data+wake-up bit mode).

Asynchronous Transmission

A transmission is initiated by writing the data to be transmitted into the transmit data buffer register S0TBUF or S1TBUF, respectively. However, a transmission will only be performed if the corresponding baud rate generator run bit S0R= ‘1’ or S1R= ‘1’ at the time the write operation to the transmit buffer occurs. Transmission then starts at the next overflow of the divide-by-16 counter (see figure 8.39). First the start bit will be output on the associated transmit data output pin TXD0 or TXD1, followed by the selected number of data bits, LSB first. In the two modes with parity bit generation, the parity bit will automatically be generated by hardware and inserted at the MSB position of the data frame during transmission.

When one stop bit has been selected for the data frame (S0STP= ‘0’ or S1STP= ‘0’), the corresponding transmit interrupt request flag S0TIR or S1TIR will be set after the last bit of the data frame (including the parity or wake-up bit) has been sent out, otherwise it will be set after the first stop bit has been sent out.

When a write operation to the transmit data buffer is performed while a transmission on the respective channel is in progress, the current transmission will be aborted, the associated output pin TXD0 or TXD1 will go high, and a new character frame will be sent with the data written to S0TBUF or S1TBUF at the next overflow of the divide-by-16 counter. Continuous data transfer can be achieved by using the transmit interrupt request to reload the transmit data buffer in the interrupt service routine or by PEC data transfer.

In order to use pin TXD0/P3.10 or TXD1/P3.8 as transmit data output, the corresponding port data output latch P3.10 or P3.8 must be set to ‘1’, and the pin must be configured as output by setting its direction control bit DP3.10 or DP3.8 to ‘1’.

Asynchronous Reception

Reception is initiated on channel ASC0 by a detected 1-to-0 transition on pin RXD0 if bit S0R= ‘1’ and S0REN= ‘1’, and on ASC1 by a 1-to-0 transition on RXD1 if S1R= ‘1’ and S1REN= ‘1’. The receive data input pins RXD0 and RXD1 are sampled at 16 times the rate of the selected baud rate. The 7th, 8th, and 9th sample are examined by the internal bit detectors. The effective bit value is determined by a majority decision in order to avoid erroneous results that may be caused by noise.

If the detected value is not a ‘0’ when the start bit is sampled, the receive circuit is reset and waits for the next 1-to-0 transition at pin RXD0 or RXD1, respectively. If the start bit proves valid, the receive circuit continues sampling and shifts the incoming data frame into the receive shift register.

When the last stop bit has been received, the contents of the receive shift register are transferred to the receive data buffer register. Simultaneously, the receive interrupt request flag S0RIR or S1RIR is set after the 9th sample in the first stop bit time slot when one stopbit has been programmed, or in the second stop bit time slot when two stop bits are programmed, regardless whether valid stop bits have been received or not. The receive circuit then waits for the next start bit (1-to-0 transition) at its receive data input pin. Note that in the 8-bit data+wake-up bit mode the data from receive shift register will only be transferred into SORBUF/S1RBUF and the receive interrupt request flag will only be set if the 9th data bit received was a ‘1’.

When the receiver enable bit S0REN or S1REN of a serial channel in asynchronous operation is reset to ‘0’ while a reception is in progress, the current reception will be completed, including generation of the receive interrupt request and, in case of errors, generation of the error interrupt request and setting of the error status flags which are described in the following. Reception then stops for the affected channel, and further start bits at the receive data input pin will be ignored.

In order to use pin RXD0/P3.11 or RXD1/P3.9 as receive data input, the corresponding direction control bit DP3.11 or DP3.9 must be set to ‘0’.

Hardware Error Detection Capabilities

To improve the safety of asynchronous data exchange, the serial channels of the ST10x166 provide selectable hardware error detection capabilities. For each channel, three error status flags in the channel‘s control register S0CON or S1CON indicate whether an error has been detected during reception. Upon completion of a reception, the error interrupt request flag S0EIR or S1EIR will be set simultaneously with the receive interrupt request flag S0RIR or S1RIR if one or more of the following conditions are met:

- If the framing error detection enable bit S0FEN or S1FEN is set and any of the expected stop bits is not high, the framing error flag S0FE or S1FE is set indicating that the error interrupt request is due to a framing error.
- If the parity error detection enable bit S0PEN or S1PEN is set in the modes where a parity bit is received, and the parity check on the received data bits proves false, the parity error flag S0PE or S1PE is set indicating that the error interrupt request is due to a parity error.
- If the overrun error detection enable bit S0OEN or S1OEN is set and the last character received was not read out of the receive buffer by software or PEC transfer at the time reception of a new frame is complete, the overrun error flag S0OE or S1OE is set indicating that the error interrupt request is due to an overrun error.

In the following subsections, specific characteristics of the individual operating modes for the asynchronous communication are described in more detail.

8.4.1.1.1 8-Bit Data Mode

This mode is selected by programming the mode selection field S0M or S1M in register S0CON or S1CON to ‘001b’. The data frame which will be transmitted and/or received consists of 8 data bits. After a reception, the upper byte of the receive buffer register contains zero. The parity checking function upon reception is disabled in this mode, independent of the state of S0PEN and S1PEN. The overrun and framing checks, however, can be enabled.

8.4.1.1.2 7-Bit Data + Parity Bit Mode

This mode is selected by programming the respective mode selection field S0M or S1M to ‘011b’. The data frame which will be transmitted and/or received consists of 7 data bits and a parity bit. All error checks may be enabled in this mode.

On transmission, the parity bit is automatically generated by hardware and inserted at the MSB position of the data frame. The parity bit is set to ‘1’ if the modulo 2 sum of the 7 data bits is 1, otherwise it is cleared (even parity).

On reception, the parity on the 7 data bits received is generated by hardware. The result is then compared to the 8th bit received, which is the parity bit. If the comparison proves false, both the parity error flag and the error interrupt request flag for the respective serial channel are set, provided the parity check has been enabled in the serial channel’s control register. The actual parity bit received is placed in the 8th bit of the receive data buffer register. The upper byte of the receive buffer register is always zero in this mode.

8.4.1.1.3 9-Bit Data Mode

This mode is selected by programming the respective mode selection field S0M or S1M to ‘100b’. The data frame which will be transmitted consists of the lower 9 bits of the transmit buffer register.

On reception, all 9 data bits received are transferred from the receive shift register to the receive buffer register, and the remaining 7 bits (9 through 15) of the receive buffer register are cleared to zero. The parity checking function upon reception is disabled in this mode, independent of the state of S0PEN and S1PEN. The overrun and framing checks, however, can be enabled.

8.4.1.1.4 8-Bit Data + Wake-Up Bit Mode

This is a special mode provided to facilitate multiprocessor communication, and it is selected by programming the mode selection field S0M or S1M to ‘101b’. The data frame which will be transmitted includes the lower 9 bits of the transmit buffer register.

The operation in this mode is basically the same as in the 9-bit data mode. However, on reception, if the 9th data bit received is a ‘0’, the received data are not transferred into the receive buffer registers S0RBUF/S1RBUF and no receive interrupt request will be generated. A way to use this feature in multiprocessor systems is as follows:

When the master processor wants to transmit a block of data to one of several slaves, it first sends out an address byte which identifies the target slave. An address byte differs from a data byte in that the additional 9th bit is a ‘1’ for an address byte and a ‘0’ for a data byte. Operating in the 8-bit data + wake-up bit mode, no slave will be interrupted by a data ‘byte’. An address ‘byte’, however, will interrupt all slaves, so that each slave can examine the 8 LSBs of the received character and see if it is being addressed. The addressed slave will switch its operating mode to the 9-bit data mode (e.g by clearing bit SxM.0, see table 8.18) and prepare to receive the data bytes that will be coming. The slaves that were not being addressed remain in the 8-bit data + wake-up bit mode, ignoring the incoming data bytes.

8.4.1.1.5 8-Bit Data+Parity Bit Mode

This mode is selected by programming the respective mode selection field S0M or S1M to ‘111b’. The data frame which will be transmitted and/or received consists of 8 data bits and a parity bit. All error checks may be enabled in this mode.

On transmission, the parity bit (even parity) is automatically generated based on the 8 data bits and inserted at the MSB position of the data frame.

On reception, the parity on the 8 data bits received is generated and the result is compared to the 9th bit received, which is the parity bit. If the compared bits are different, both the parity error flag and the error interrupt request flag are set, provided the parity check has been enabled. The actual parity bit received is placed in the 9th bit of the receive data buffer register, and the remaining 7 bits (9 through 15) of the receive buffer register are cleared to zero.

8.4.1.2 SYNCHRONOUS OPERATION

This operating mode of the serial channels ASC0 and ASC1 allows half-duplex communication and is mainly provided for simple I/O expansion via shift registers. 8 data bits are transmitted or received synchronous to a shift clock generated by the internal baud rate generator. The shift clock is only active as long as data bits are transmitted or received. Synchronous operation is selected by programming the mode control field S0M or S1M of a serial channel to '000b'. Figure 8.42 shows a block diagram of a serial channel in synchronous mode.

In synchronous operation, pin TXD0/P3.10 is used by ASC0 to output the shift clock, while RXD0/P3.11 either serves as transmit data input or receive data output. Channel ASC1 uses pins RXD1/P3.9 and TXD1/P3.8 for these purposes.

8.4.1.2.1 Synchronous Data Transmission

Figure 8-42. Serial Channel Synchronous Mode Block Diagram

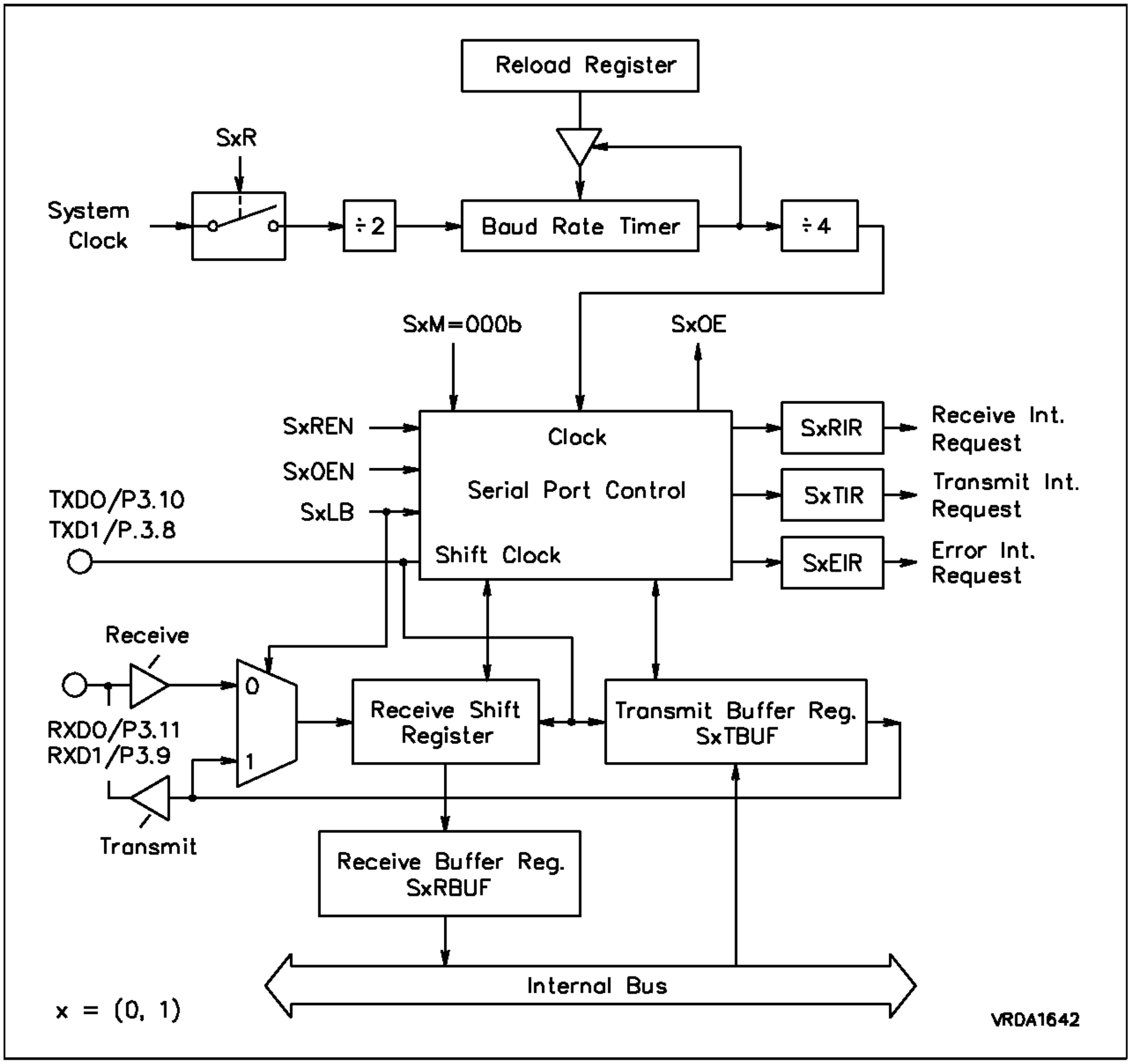
Reload Register
SxR
System Clock
÷2
Baud Rate Timer
÷4
SxM=000b
SxOE
SxREN
SxOEN
SxLB
Clock
Serial Port Control
Shift Clock
SxRIR
SxTIR
SxEIR
Receive Int. Request
Transmit Int. Request
Error Int. Request
TXD0/P3.10
TXD1/P.3.8
Receive
0
1
RXD0/P3.11
RXD1/P3.9
Transmit
Receive Shift Register
Transmit Buffer Reg. SxTBUF
Receive Buffer Reg. SxRBUF
Internal Bus
x = (0, 1)
VRDA1642

For data transmission, the transmit data buffer register S0TBUF (S1TBUF) is loaded with the byte to be transmitted. If bit S0R = ‘1’ and S0REN = ‘0’ in register S0CON (S1R = ‘1’ and S1REN = ‘0’ in S1CON) at that time, the LSB of the transmit buffer register will appear at pin RXD0 (RXD1) within 4 state times after this write operation has been executed. Subsequently, the contents of the transmit buffer register are shifted out synchronous with the clock at the corresponding shift clock output pin TXD0 (TXD1). After the bit time for the 8th bit, both pins TXD0 and RXD0 (TXD1 and RXD1) will go high, the transmit interrupt request flag S0TIR (S1TIR) is set, and serial data transmission stops.

While a synchronous data transmission is in progress, any write operation to the transmit buffer register of this serial channel will abort the current transmission and start a new transmit process. When the receiver enable bit S0REN or S1REN is set to ‘1’ during a transmission, unpredictable results may occur on the affected channel.

In order to configure TXD0/P3.10 or TXD1/P3.8 as shift clock output, both the corresponding port output bit latch P3.10 or P3.8 and the direction control bit DP3.10 or DP3.8 must be set to 1. Pin RXD0/P3.11 or RXD1/P3.9 is each configured as transmit data output by setting both P3.11 = ‘1’ and DP3.11 = ‘1’, or P3.9 = ‘1’ and DP3.9 = ‘1’, respectively.

8.4.1.2.2 Synchronous Data Reception

Data reception is initiated by setting bit S0REN = ‘1’ (S1REN = ‘1’). If bit S0R = ‘1’ (S1R = ‘1’), the data applied at pin RXD0 (RXD1) are clocked into the receive shift register synchronous to the clock which is output at pin TXD0 (TXD1). After the 8th bit has been shifted in, the contents of the receive shift register are transferred to the receive data buffer S0RBUF (S1RBUF), the receive interrupt request flag S0RIR (S1RIR) is set, the receiver enable bit S0REN (S1REN) is reset, and serial data reception stops. RXD0/P3.11 or RXD1/P3.9 are configured as receive data input by setting DP3.11 = ‘0’ or DP3.9 = ‘0’.

Once a reception is in progress on a serial channel, resetting its receiver enable bit S0REN or S1REN to ‘0’ by software has no effect. Writing to its transmit buffer register while a reception is in progress has no effect on reception nor will it ever start a transmission.

In synchronous operation, the low byte of the receive buffer register represents the received data, while the high byte is always zero after synchronous reception. If a previously received byte has not been read out of the receive buffer register at the time reception of the next byte is complete, both the error interrupt request flag S0EIR or S1EIR and the overrun error status flag S0OE or S1OE will be set, provided the overrun check has been enabled by bit S0OEN or S1OEN.

8.4.1.2.3 Loop-back Mode

For testing purposes, a special loop-back mode is provided which allows testing of each serial channel without using the alternate functions of the port pins associated with this channel. While in loop-back mode, instead of receiving data from the RX D0 or RXD1 pin, the data which are transmitted are simultaneously clocked into the receive shift register.

A transmission in loop-back mode is initiated for channel ASC0 by a write operation to S0TBUF when S0LB = ‘1’, S0REN = ‘1’ and S0R = ‘1’, and for ASC1 by writing to S1TBUF with S1LB = ‘1’, S1REN = ‘1’ and S1R = ‘1’. This feature is available for all operating modes (asynchronous and synchronous) of the serial channels.

8.4.2 Baud Rates

Each of the serial channels of the ST10x166 has its own dedicated 13-bit baud rate generator with 13-bit reload capability, allowing independent baud rate selection for each channel.

Both baud rate generators are 13-bit timers clocked with the internal system clock divided by 2 (10MHz at 40MHz oscillator frequency). The timers are counting downwards and can be started or stopped through the Baud Rate Generator Run Bits S0R or S1R in register S0CON or S1CON. Each underflow of a timer provides one clock pulse to a serial channel. The timers are reloaded with the value stored in their 13-bit reload register each time they underflow. The baud rate selection bits S0BRS and S1BRS allow the increase of the baud rate by a coefficient of 2/3.

Thus, the baud rate of a serial channel is determined by the oscillator frequency, the Baud Rate Selection Bit, the reload value, and the mode (asynchronous or synchronous) of the serial channel.

Registers S0BG and S1BG are the dual-function Baud Rate Generator/Reload registers. Reading S0BG or S1BG returns the contents of the timer, while writing to S0BG or S1BG always updates the reload register. When writing to S0BG or S1BG (i.e., to the reload registers), the 3 upper bits 13 through 15 are insignificant, while reading S0BG or S1BG (i.e., the timer registers) always returns zero in bits 13 through 15.

An auto-reload of the timer with the contents of the reload register is performed each time S0BG or S1BG is written to. However, if S0R = ‘0’ or S1R = ‘0’ at the time the write operation to S0BG or S1BG is performed, the timer will not be reloaded until the first instruction cycle after S0R = ‘1’ or S1R = ‘1’.

8.4.2.1 ASYNCHRONOUS MODE BAUD RATES

In asynchronous operation, the baud rate generators provide a clock with 16 times the rate of the established baud rate. The reason for this is that on reception every bit frame is sampled 16 times. Thus, the baud rates Basync0 and Basync1 for the serial channels ASC0 and ASC1 in asynchronous operation are determined by the following formulas:

$$\text{Basync0} = \frac{f_{OSC}}{64 \times (\text{<S0BRL>} + 1)}$$

$$\text{Basync1} = \frac{f_{OSC}}{64 \times (\text{<S1BRL>} + 1)}$$

When SxBRS = ‘1’, these formulas are:

$$\text{Basync0} = \frac{2}{3}\ \frac{f_{OSC}}{64 \times (\text{<S0BRL>} + 1)}$$

$$\text{Basync1} = \frac{2}{3}\ \frac{f_{OSC}}{64 \times (\text{<S1BRL>} + 1)}$$

<S0BRL> and <S1BRL> represent the contents of the reload registers, taken as unsigned 13-bit integers.

Table 8.19 lists various commonly used baud rates together with the required reload value. The maxi-

Table 8-19. Asynchronous Modes Baud Rates (Baud Rate SxBRS=0)

Baud Rate		f_{osc}	Reload Value
625	KBaud	40 MHz	0000h
19.2	KBaud	39.3216 MHz	001Fh
9600	Baud	39.3216 MHz	003Fh
4800	Baud	39.3216 MHz	007Fh
2400	Baud	39.3216 MHz	00FFh
1200	Baud	39.3216 MHz	01FFh
600	Baud	39.3216 MHz	03FFh
75	Baud	39.3216 MHz	1FFFh

Serial Channel Interrupt Control Registers

Reset Value: 0000h

S0TIC (FF6Ch / B6h)

7	6	5	4	3	2	1	0
S0TIR	S0TIE	ILVL				GLVL	

S0RIC (FF6Eh / B7h)

7	6	5	4	3	2	1	0
S0RIR	S0RIE	ILVL				GLVL	

S0EIC (FF70h / B8h)

7	6	5	4	3	2	1	0
S0EIR	S0EIE	ILVL				GLVL	

S1TIC (FF72h / B9h)

7	6	5	4	3	2	1	0
S1TIR	S1TIE	ILVL				GLVL	

S1RIC (FF74h / BAh)

7	6	5	4	3	2	1	0
S1RIR	S1RIE	ILVL				GLVL	

S1EIC (FF76h / BBh)

7	6	5	4	3	2	1	0
S1EIR	S1EIE	ILVL				GLVL	

mum baud rate that can be achieved for the asynchronous modes when using a 40MHz oscillator is 625KBaud.

8.4.2.2 SYNCHRONOUS MODE BAUD RATES

In the synchronous mode, the baud rate generators provide 4 times the rate of the desired baud rate. Therefore, the underflow rate coming from the baud rate timers is additionally divided by four. The maximum baud rate that can be achieved in synchronous operation when using a 40MHz oscillator is 2.5 MBaud. Generally, the baud rates Bsync0 and Bsync1 for the serial channels in synchronous operation are determined as follows:

$$\mathrm{Basync0} = \frac{f_{\mathrm{OSC}}}{16 \times (\langle \mathrm{S0BRL} \rangle + 1)}$$

$$\mathrm{Basync1} = \frac{f_{\mathrm{OSC}}}{16 \times (\langle \mathrm{S1BRL} \rangle + 1)}$$

When SxBRS = ‘1’, these formulas are:

$$\mathrm{Basync0} = \frac{2}{3} \; \frac{f_{\mathrm{OSC}}}{16 \times (\langle \mathrm{S0BRL} \rangle + 1)}$$

$$\mathrm{Basync1} = \frac{2}{3}\ \frac{f_{OSC}}{16 \times (\langle S1BRL \rangle + 1)}$$

8.4.3 Serial Channels Interrupt Control

Three bit addressable interrupt control registers are provided for each serial channel. Registers S0TIC and S1TIC control the transmit interrupt, registers S0RIC and S1RIC control the receive interrupt, and registers S0EIC and S1EIC control the error interrupt of serial channel ASC0 and ASC1, respectively. Each interrupt source also has its own dedicated interrupt vector. S0TINT is the transmit interrupt vector, S0RINT is the receive interrupt vector, and S0EINT is the error interrupt vector for channel ASC0, while S1TINT, S1RINT, and S1EINT are the corresponding interrupt vectors for ASC1.

The cause of an error interrupt request (framing, parity, overrun error) can be identified by the error status flags in control registers S0CON and S1CON. Note that, unlike the error interrupt request flags S0EIR or S1EIR, the error status flags S0FE/S0PE/S0OE or S1FE/S1PE/S1OE are not reset automatically upon entry into the error inter-

Figure 8-43. Watchdog Timer Block Diagram

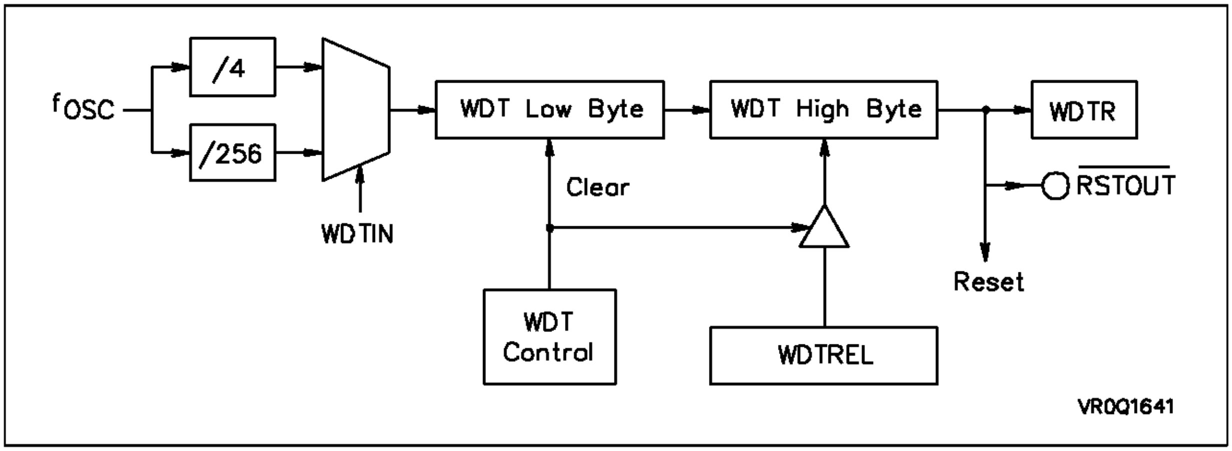
fosc
/4
/256
WDTIN
WDT Low Byte
WDT High Byte
WDTR
Clear
RSTOUT
Reset
WDT Control
WDTREL
VR0Q1641

Figure 8-44. SFRs and Reset Indication Pin Associated with the Watchdog Timer

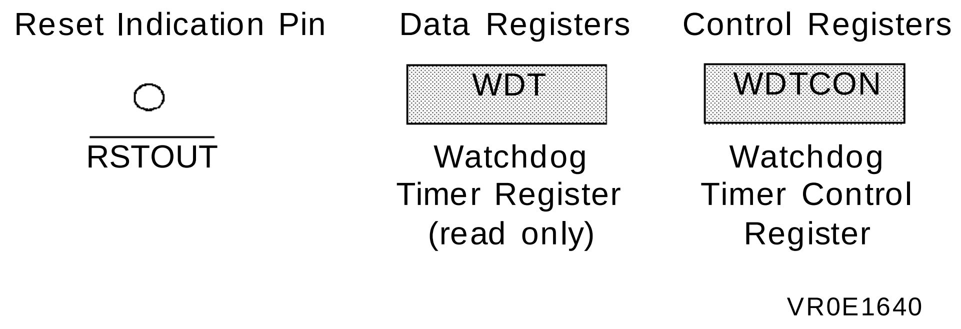
Reset Indication Pin
Data Registers
Control Registers
WDT
WDTCON
RSTOUT
Watchdog Timer Register (read only)
Watchdog Timer Control Register
VR0E1640

rupt service routine, but must be cleared by software.

The organization of the interrupt control registers associated with the serial channels is shown here. For more details on interrupts refer to chapter 7.

8.5 WATCHDOG TIMER (WDT)

To allow recovery from software or hardware failure, a Watchdog Timer has been provided in the ST10x166. If the software fails to service this timer before an overflow occurs, an internal hardware reset will be initiated. This internal reset will also pull the $\overline{\text{RSTOUT}}$ pin low (see chapter 11). When the software has been designed to service the Watchdog Timer before it overflows, the Watchdog Timer times out if the program does not progress properly. The Watchdog Timer will also time out if a software error was due to hardware related failures. This prevents the controller from malfunctioning for longer than a user-specified time.

The Watchdog Timer is a 16-bit up counter which can be clocked with either the oscillator frequency (f_{OSC}) divided by 4 or with f_{OSC} /256. The upper 8 bits of the Watchdog Timer can be preset to a user-programmable value in order to vary the watchdog time. Figure 8.43 shows a block diagram of the Watchdog Timer, while Figure 8.44 shows the SFRs and the reset indication pin $\overline{\text{RSTOUT}}$ which are associated with the Watchdog Timer.

Watchdog Operation

The current count value of the Watchdog Timer is contained in the Watchdog Timer Register WDT, which is a non-bit-addressable READ-ONLY register. The operation of the Watchdog Timer is controlled by the bit-addressable Watchdog Timer Control Register WDTCON shown hereafter.

After any software-, external hardware-, or Watchdog Timer reset, the Watchdog Timer is enabled and starts counting up from 0000h with the frequency f_{OSC}/4. The Watchdog Timer can be disabled via the instruction DISWDT (Disable Watchdog Timer). Instruction DISWDT is a protected 32-bit instruction which will ONLY be executed during the time between a reset and execution of either the EINIT (End of Initialization) or the SRVWDT (Service Watchdog Timer) instruction. Either one of these instructions disables the execution of DISWDT.

When the Watchdog Timer is not disabled via instruction DISWDT, it will continue counting up, even during Idle Mode. If it is not serviced via the instruction SRVWDT by the time the count reaches FFFFh, the Watchdog Timer will overflow and cause an internal reset. This reset will pull the external reset indication pin $\overline{\text{RSTOUT}}$ low. It differs from a software or external hardware reset in that bit WDTR (Watchdog Timer Reset Indication flag) of register WDTCON will be set. A hardware reset or the SRVWDT instruction will clear this bit. Bit WDTR can then be examined by software in order to determine the cause of the reset.

To prevent the Watchdog Timer from overflowing, it must be serviced periodically by the user software. The Watchdog Timer is serviced with the instruction SRVWDT, which is a protected 32-bit instruction. Servicing the Watchdog Timer clears the low byte and reloads the high byte of the

Table 8-20. Watchdog Time Ranges

WDTREL	Prescaler for f_{osc}	
	4 (WDTIN = 0)	256 (WDTIN = 1)
FFh	25.6µs	1.6ms
00h	6.55ms	419ms

WDTCON (FFAEh / D7h)

Watchdog Timer Control Register

Reset Value: 0000h

15	14	13	12	11	10	9	8
WDTREL							

7	6	5	4	3	2	1	0
R						WDTR	WDTIN

b15 to b8 = **WDTREL:** Reload Value for the high byte of the Watchog Timer.

b7 to b2 = R: Reserved.

b1 = **WDTR:** Watchdog Timer Reset. Indication flag, Read only bit, this bit is set by watchdog overflow. It is cleared by hardware reset or by the SRVWDT instruction.

b0 = **WDTIN:** Watchdog Timer Input Frequency Selection.
WDTIN = 0: $f_{osc}/4$
WDTIN = 1: $f_{osc}/256$.

NOTES:

CHAPTER 9

EXTERNAL BUS INTERFACE

9. EXTERNAL BUS INTERFACE

The ST10x166 has been architected to be placed in a number of different applications and system designs. In order to meet the needs of designs where more memory is required than is provided on the chip, a number of external bus configuration modes are supported. These are listed below:

Single Chip Mode

No external bus is configured in this mode. Selecting this mode during reset implies that program execution starts from the internal program memory. No external memory can be accessed as long as the ST10x166 is in this mode. However, the single chip mode can be left to enter any of the following external bus configuration modes by simply reprogramming the System Configuration (SYSCON) register.

16/18-Bit Address, 8-Bit Data, Multiplexed Bus

This mode is provided for accesses to a byte-organized external memory. The eight least significant bits of the address and the data byte are time-multiplexed on the lower portion of the word-wide external bus. For this mode, Port 0 is used as interface to the multiplexed external address/data bus. As long as memory segmentation is not disabled, Port 4 is additionally used as an output for the two most significant bits of the required 18-bit addresses.

16/18-Bit Address, 16-Bit Data, Multiplexed Bus

This mode is provided for accesses to a word-organized external memory. The sixteen least significant address bits and the data word are time-multiplexed on the word-wide external bus. For this mode, Port 0 is used as interface to the multiplexed external address/data bus. As long as memory segmentation is not disabled, Port 4 is additionally used as an output for the two most significant bits of the required 18-bit addresses.

16/18-Bit Address, 16-Bit Data, Non-Multiplexed Bus

This mode is also provided for accesses to a word organized external memory. However, two separate buses are used for the sixteen least significant address bits and the data word. Thus, addresses and data do not have to be time-multiplexed. For this mode, Port 0 is used as an interface to the external data bus and Port 1 is used as an interface to the external address bus. As long as memory segmentation is not disabled, Port 4 is additionally used as an output for the two most significant bits of the required 18-bit addresses.

16/18-Bit Address, 8-Bit Data, Non-Multiplexed Bus

This mode is provided for accesses to a byte-organized external memory. However, two separate buses are used for the eight least significant bits of the address and the data byte. For this mode, Port 0 is used as an interface to the 8-bit external data bus and Port 1 is used as an interface to the 16-bit external address bus. No time-multiplexing and no additional address latch is required in this bus mode. If segmentation is enabled, Port 4 is additionally used to output the two most significant bits of the required 18-bit address.

Basically, the ST10x166 supports an 18-bit address space. The 16-bit address mode refers to the case of segmentation being disabled.

Regardless of which external bus mode is selected, accesses to addresses from ‘0FA00h’ through ‘0FFFFh’ are performed internally. In case of initializing the ST10166 to the singlechip mode, internal ROM accesses become basically disabled, and thus accesses to addresses from ‘00000h’ through ‘07FFFh’ are performed internally, too. Otherwise, any access to addresses within the first 32Kbytes would be performed externally. In any case, accesses to addresses from ‘08000h’ through ‘0F9FFh’, or in any segment other than zero, would be tried to be made externally. Note, however, that external memory locations higher than ‘0FFFFh’ cannot be accessed if the non-segmented memory mode or the single chip mode is selected. This also applies to the ST10F166 device and its Flash memory. For more details about the ST10x166’s memory organization see chapter 3.

9.1 EXTERNAL BUS CONFIGURATION DURING RESET

Any of the initial external bus configuration modes is selected by means of three External Bus Configuration pins (EBC0, EBC1 and $\overline{\text{BUSACT}}$). For this, the input values on these dedicated pins are sampled during reset and copied into the BTYP bit field and the BUSACT bit of the SYSCON register as follows:

SYSCON.7 = EBC1
SYSCON.6 = EBC0
SYSCON.10 = BUSACT

Table 9.1 shows the association between the initial $\overline{\text{BUSACT}}$, EBC0 and EBC1 input pin values, the corresponding external bus configuration modes and the ports used as interface to the external address and/or data bus(es):

Table 9-1. Initial External Bus Configuration During Reset

$\overline{\text{BUSACT}}$	EBC1	EBC0	External Bus Configuration	Ports used for		
				A17, A16	A15..A0	D15..D0
1	**0**	**0**	**Single Chip Mode** **No External Bus**	**-**	**-**	**-**
1	**0**	**1**	**Reserved** **No External Bus**	**-**	**-**	**-**
1	**1**	**0**	**Reserved** **No External Bus**	**-**	**-**	**-**
1	**1**	**1**	**Reserved** **No External Bus**	**-**	**-**	**-**
0	**0**	**0**	**18-Bit Address/8-Bit Data** **Non-Multiplexed** **No Internal ROM**	**P4**	**P1**	**P0(low)**
0	**0**	**1**	**18-Bit Address/8-Bit Data** **Time-Multiplexed** **No Internal ROM**	**P4**	**P0**	**P0(low)**
0	**1**	**0**	**18-Bit Address/16-Bit Data** **Time-multiplexed** **No Internal ROM**	**P4**	**P0**	**P0**
0	**1**	**1**	**18-Bit Address/16-Bit Data** **Non-Multiplexed** **No Internal ROM**	**P4**	**P1**	**P0**

As just mentioned, the BUSACT bit and the BTYP field in the SYSCON register are initialized during reset. This selected configuration can be modified during initialization, but ,after the EINIT instruction, only the external bus configuration can be modified at any time. Any changes of the configuration which affect the on-chip ROM or Flash Memory can only be made until the end of the initialization instruction (e.g. the mapping of the ROM to segment 1, the ROM disabled).

Table 9.2 shows all the possibility of configuration.

If the ST10x166 is initialized to an external bus configuration mode other than the single chip mode, Port 4 pins are used as an output for the most significant address pins (A17 and A16). This alternate function of Port 4 stays enabled until the SGTDIS bit in the SYSCON register is set to '1'. If one of the two 16-bit Data Bus modes is selected during reset, the function of the Byte High Enable pin ($\overline{BHE}$) becomes also enabled and stays enabled until the BYTDIS bit in the SYSCON register is set to '1'. This ensures that the External Bus Controller can properly access the initialization code in any case. Many of the external bus transfer characteristics are controlled via the SYSCON register in addition. Software programming of the SYSCON register allows the user to vary particular timing parameters in a wide range. During reset, all of the external bus timing parameters are initialized in a way that even very slow external memories can be accessed properly. For more details on the programmable external bus timing parameters see section 9.7

Table 9-2. Action/Function Selected At:

BUSACT	BTYP	Reset	During Init	After Init
0	**00**	**ROM enable Segment 0 No ext. Bus**	**ROM enable Segment 0**	**No action**
0	**01**	**(reserved)**	**ROM enable Segment 1**	**No action**
0	**10**	**(reserved)**	**Disable ROM**	**No action**
0	**11**	**(reserved)**	**Disable ext. Bus**	**No action**
1	**00**	**8-Bit Non-Mux No ROM**	**8-Bit Non-Mux**	**8-But Non-Mux**
1	**01**	**8-Bit-Mux No ROM**	**8-Bit Mux**	**8-Bit Mux**
1	**10**	**16-Bit-Mux No ROM**	**16-Bit-Mux**	**16-Bit-Mux**
1	**11**	**16-Bit Non-Mux No ROM**	**16-Bit Non-Mux**	**16-Bit-Non-Mux**

9.2 SINGLE CHIP MODE

The single chip mode must be selected whenever program execution shall start from the on-chip program memory. If this mode has been selected once during reset, internal accesses stay globally enabled. During reset, the Instruction Pointer (IP) and the Code Segment Pointer (CSP) registers are both cleared, and thus program execution begins at the internal ROM location 00000h.

As shown in figure 9.1, Port 0, Port 1 and Port 4 (A17 and A16) can be used as general purpose I/O registers.

Note that any intended access to a location within the external memory space will cause a hardware trap to occur if the controller is in the single chip mode.

For applications where the on-chip program memory is not sufficient, the single chip mode can be left by simply modifying the BTYP bit field and the BUSACT bit in the SYSCON register (see section 5.3.1.1). In this case, an external memory can be accessed and the entire on chip memory remains accessible.

9.3 16/18-BIT ADDRESS, 8-BIT DATA, NON-MULTIPLEXED BUS

This external bus mode must be selected if a byte external memory shall be connected to the ST10x166. As shown in figure 9.2, Port 1 is used as a word address output while the lower half of Port 0 is used as separated byte data output. Since two independent buses are used, no time multiplexing and no additional address latch is required in this case. As long as memory segmentation is not disabled, Port 4 is additionally used as an output for the two most significant bits of the required 18-bit address. The upper half of Port 0 can not be used for general purpose I/O.

Figure 9-1. Single Chip Mode

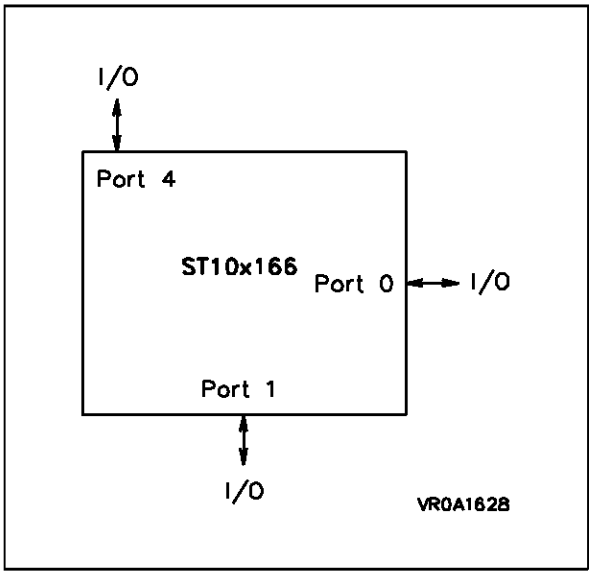

Figure 9-2. 16/18 Bit Address, 8-Bit Data, Non-Multiplexed Bus

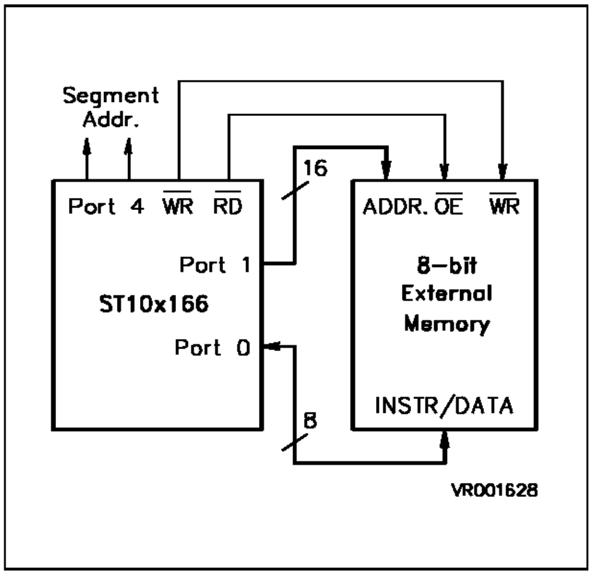

9.4 16/18-BIT ADDRESS, 8-BIT DATA, MULTIPLEXED BUS

This external bus mode must be selected if a byte-wide external memory shall be connected to the ST10x166.

As shown in the figure 9.3, the lower address byte and the data byte are time-multiplexed on the lower portion of the word-wide external bus. Therefore, an external byte-wide address latch is required for the eight least significant address bits. An Address Latch Enable (ALE) signal is generated by the on-chip External Bus Controller (EBC) to signify a valid address being available on Port 0. As long as memory segmentation is not disabled, Port 4 is additionally used as an output for the two most significant bits of the required 18-bit addresses. Port 1 can be used for general purpose I/O functions.

Whenever a word is to be accessed externally in this mode, the EBC generates two consecutive addresses and adjusts incoming bytes into words, or outgoing words into bytes. The low byte of a word is accessed first, then the high byte access is performed.

The process of transferring two bytes sequentially over the external bus for any word access, causes the operation of the processor to slow down. In fact, this mode is not as fast as the other external memory access modes. However, there is a cost advantage since inexpensive byte-wide memories can be used.

A detailed application example for this external bus configuration mode is shown in appendix 'C'.

Figure 9-3. 16/18-Bit Address, 8-Bit Data, Multiplexed Bus

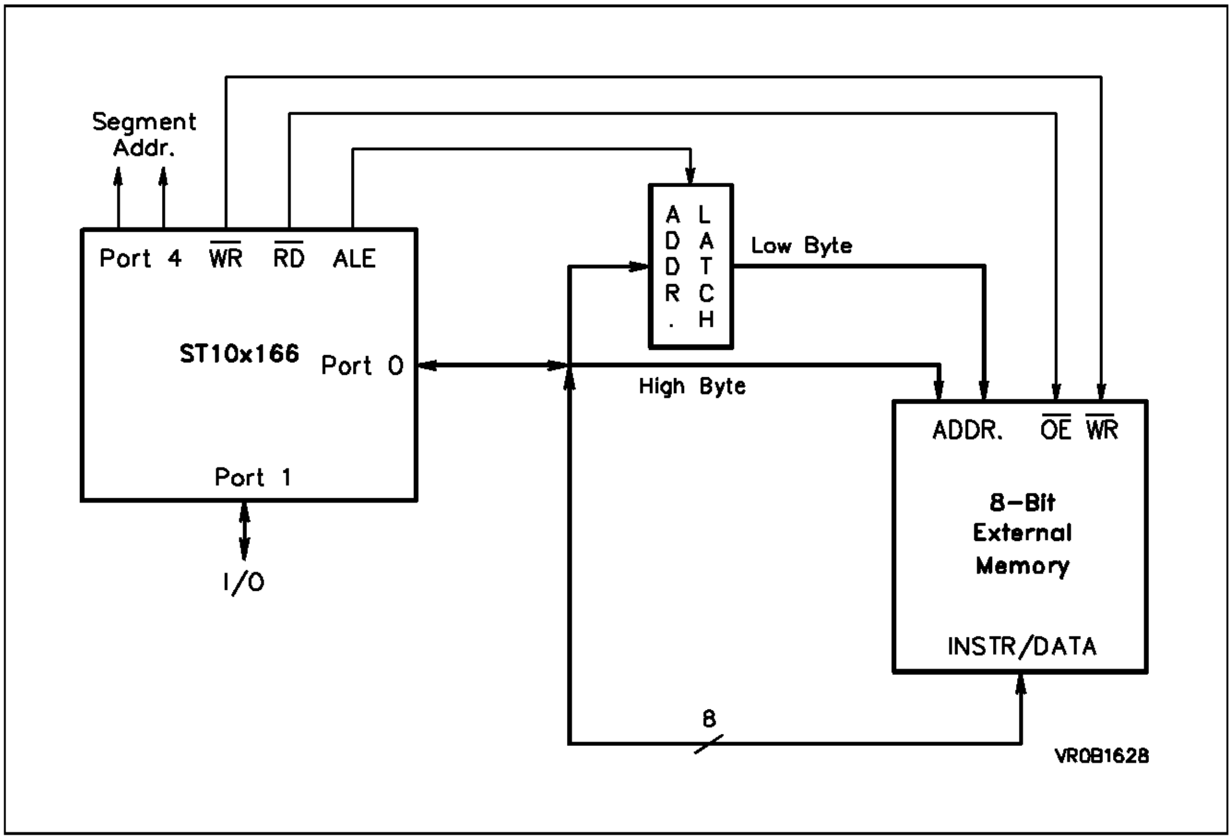

9.5 16/18-BIT ADDRESS, 16-BIT DATA, MULTIPLEXED BUS

This external bus mode can be selected if a word-wide external memory is connected to the ST10x166.

As shown in the figure 9.4, Port 0 is used as a word-wide output for both the address and data which are time-multiplexed on the word-wide external bus. Therefore, an external word wide address latch is required. The least significant address bit A0 is normally not significant when accessing word-organized memories. An Address Latch Enable (ALE) signal is generated by the on-chip External Bus Controller (EBC) to signify a valid address being available on Port 0. As long as memory segmentation is not disabled, Port 4 is additionally used as an output for the two most significant bits of the required 18-bit addresses. Port 1 can be used for general purpose I/O functions. Compared with the other external bus configuration modes, the 16/18-bit Address, 16 bit Data, Multiplexed Bus mode provides a middle level of performance. It is faster than the 8-bit data bus mode because a memory does not need to be accessed twice in order to fetch a word-wide value. This advantage, however, is not totally utilized since addresses and data are time multiplexed on the external bus. This time multiplexing reduces the overall possible bandwidth of the bus.

This external bus configuration mode can also be selected if the word-organized external memory is implemented by two separate 8-bit-wide memories. These two memories can be accessed both wordwise, coupled together as one word-wide memory, and individually as two independent byte memories.

For the case where the two byte-wide memories are to be accessed only wordwise, the addressing scheme is the same as if only one 16-bit wide memory is used. For the case where the two memories are also to be accessed as independently suitable byte wide memories, the External Bus Controller (EBC) must be enabled to use the function of the Byte High Enable pin as described in the following.

Figure 9-4. 16/18-Bit Address, 16-Bit Data, Bus Multiplexed Bus (Word-Wide Memories)

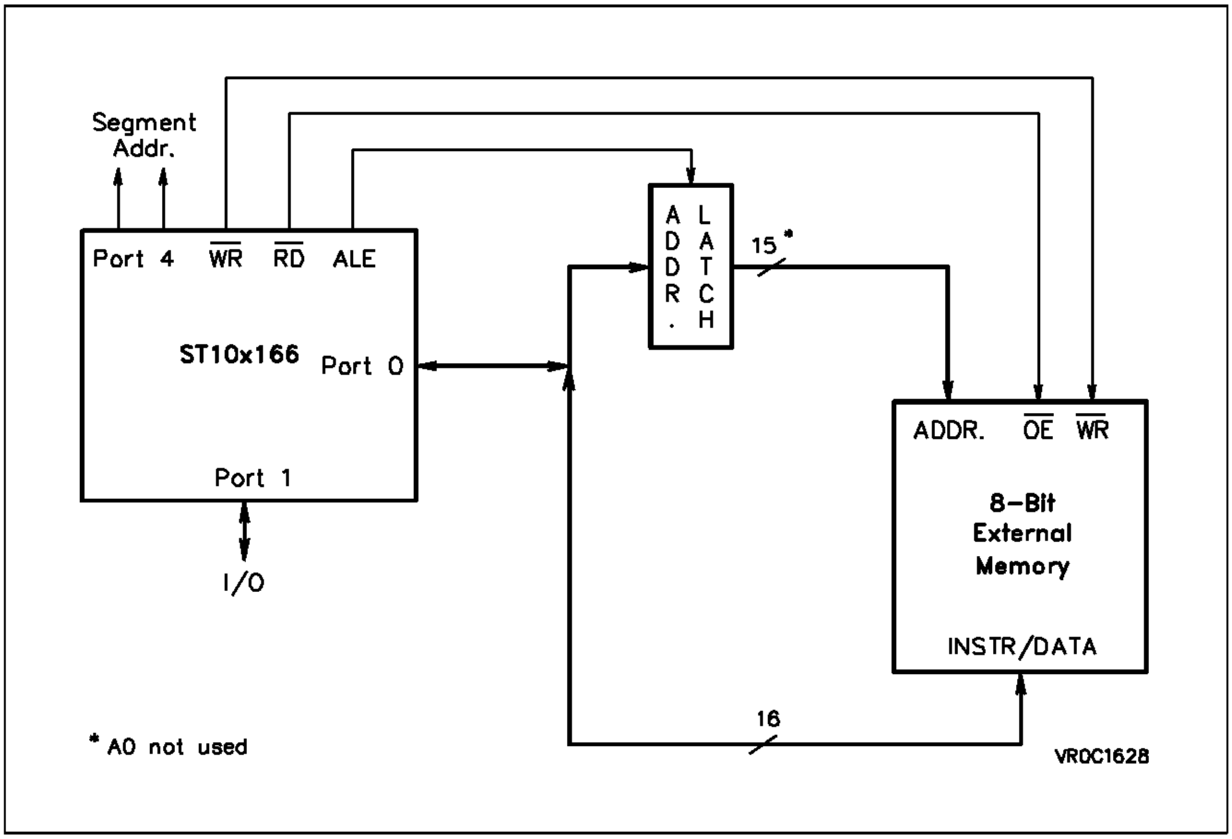

Firstly, the Byte Disable bit (BYTDIS) in the SYSCON register must contain a '0' (this is the default after system reset), and secondly a 16-bit Data Bus mode must have been configured. If these presuppositions are fulfilled, the Byte High Enable ($\overline{BHE}$) function which is an alternate active low output function of Port 3 Pin 12 (P3.12) becomes enabled, and will be implicitly used by the External Bus Controller (EBC) whenever an external memory access is performed.

Table 9.3 shows which $\overline{BHE}$ output is generated by the EBC dependent on the least significant address bit (A0) and the type of access desired for the two coupled external byte memories.

Note that the EBC places any byte value to be written to the external memory on both the upper byte portion and the lower byte portion of the 16-bit external data bus. However, the byte will only be stored in that byte memory which is specified by A0 and $\overline{BHE}$.

To be correctly used as just described, the $\overline{BHE}$ output pin must be connected to the chip select input ($\overline{CS}$) of the memory at the high byte location, and the A0 address output pin must be connected to the chip select input of the memory at the low byte location, as shown in figure 9.5.

Detailed application examples for the just mentioned external bus and memory configurations are shown in appendix 'C'.

Table 9-3. Word or Byte Access to Two Coupled Byte-Wide Memories

$\overline{BHE}$	A0	Type of Access
0	**0**	**Both byte memories are accessed together for word transfers**
0	**1**	**Only the high byte memory is accessed for byte transfers**
1	**0**	**Only the low byte memory is accessed for byte transfers**
1	**1**	**Not used**

Figure 9-5. 16/18-Bit Address, 16-Bit Data, Bus Multiplexed (Byte-Wide Memories)

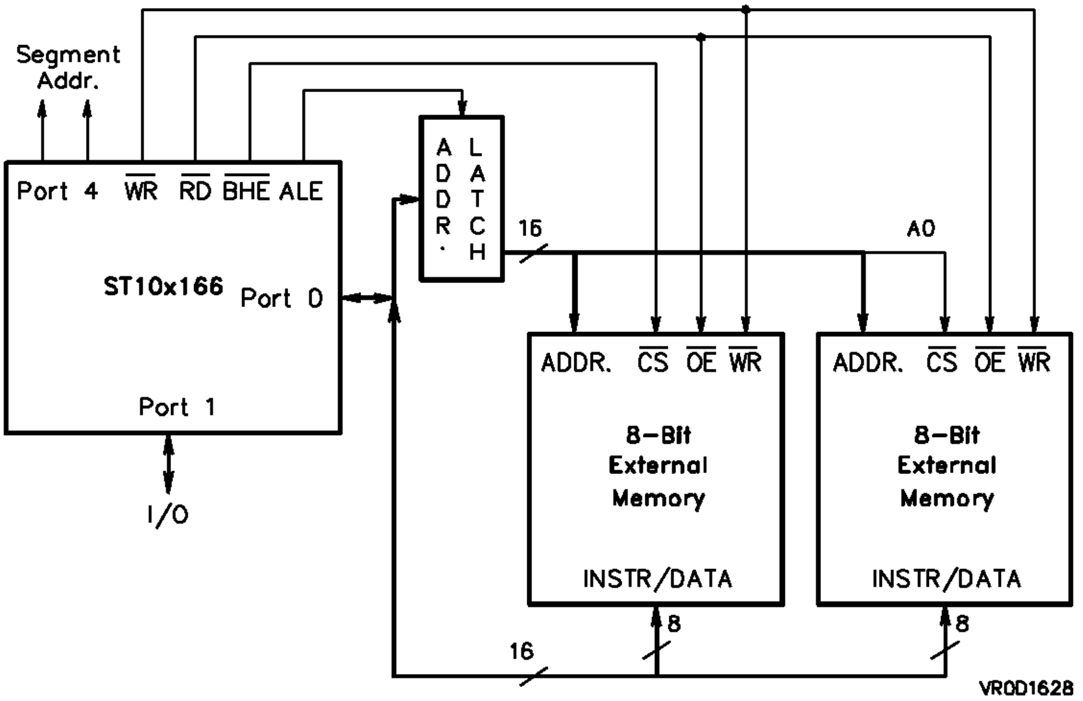

9.6 16/18-BIT ADDRESS, 16-BIT DATA, NON-MULTIPLEXED BUS

This external bus mode can be selected if the ST10x166 is to be used in collaboration with a word-wide external memory.

As shown in figure 9.6, Port 1 is used as a word-wide address output and Port 0 is used as separated word-wide data output. The least significant address bit A0 is normally not used when accessing word-organized memories. Since two independent buses are used, no time-multiplexing and no additional address latch is required in this case. As long as memory segmentation is not disabled, Port 4 is additionally used as an output for the two most significant bits of the required 18-bit addresses.

Compared with the other external bus configuration modes, the 16/18-bit Address, 16 bit Data, Non-Multiplexed Bus mode provides the highest level of performance. It is faster than other modes because it does not have to access the memory twice in order to fetch a word-wide value, and it also saves the additional time delay caused by address and data multiplexing.

As shown in figure 9.7, this external bus configuration mode can also be selected if the word-organized external memory is implemented by two separate 8-bit wide memory devices. These two memories can be accessed both wordwise, coupled together as one word-wide memory, and individually as two independent byte memories.

For the case where the two memories are accessed coupled together as one word-wide memory, the addressing scheme is the same as if only one 16-bit wide memory was used. For the case where the memories are also accessed as independently suitable byte-wide memories, the External Bus Controller EBC must be enabled to use the function of the Byte High Enable pin ($\overline{BHE}$) as described in the previous section 9.5.

Detailed application examples for the just mentioned external bus and memory configuration are shown in appendix 'C'.

Figure 9-6. 16/18-Bit Address, 16-Bit Data, Non-Multiplexed Bus (Word-Wide Memories)

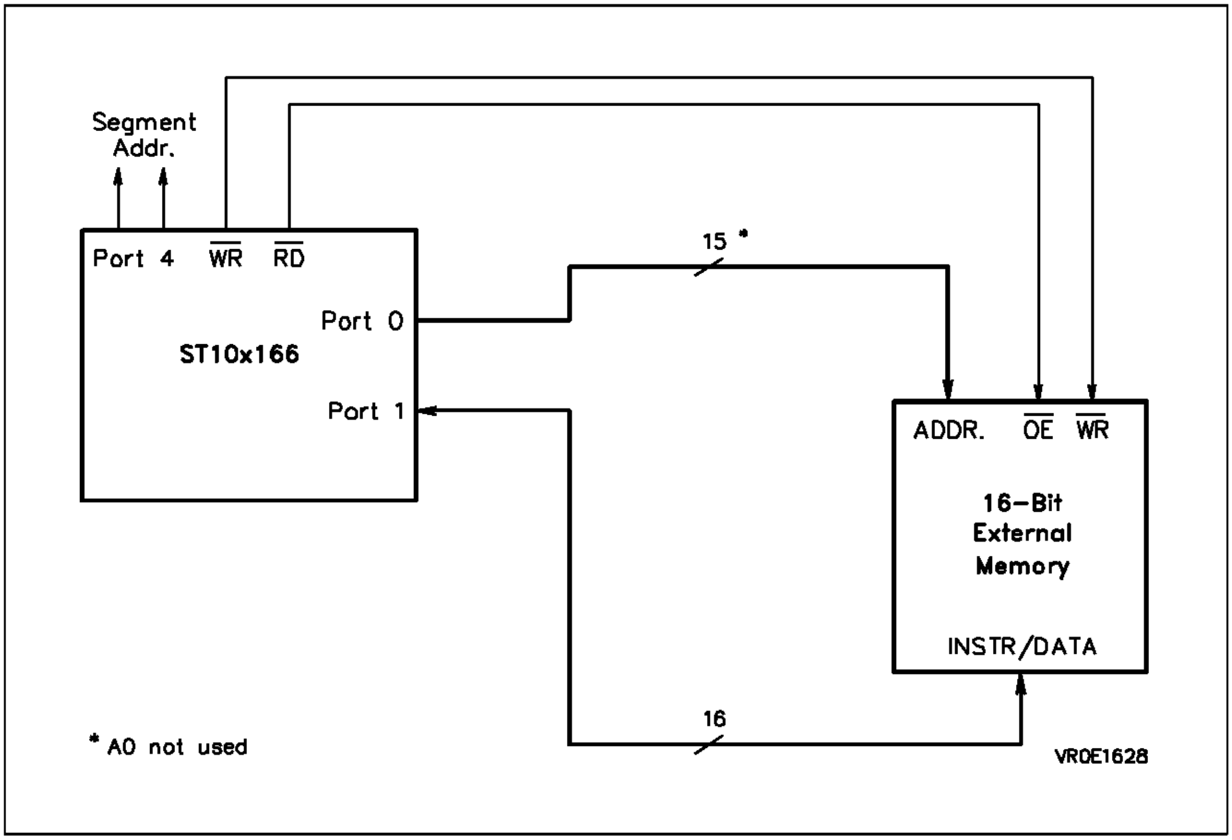

Figure 9-7. 16/18-Bit Address, 16-Bit Data, Non-Multiplexed Bus (Word-Wide Memories)

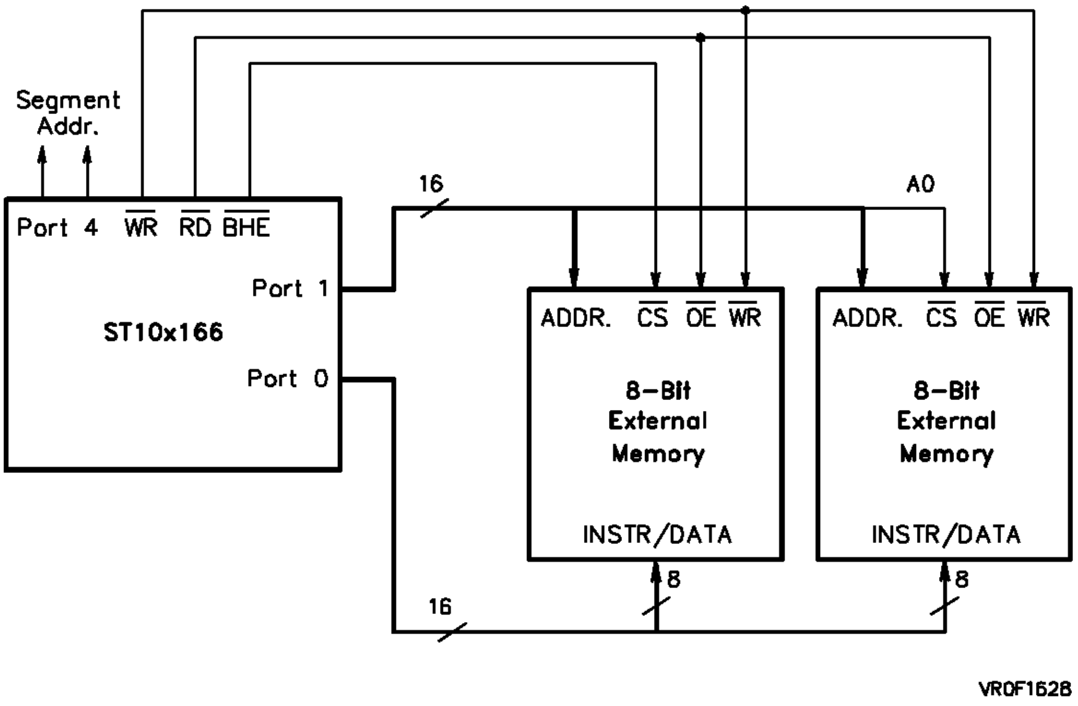
Segment Addr.
Port 4
WR
RD
BHE
Port 1
ST10x166
Port 0
16
A0
ADDR.
CS
OE
WR
8-Bit External Memory
INSTR/DATA
8
ADDR.
CS
OE
WR
8-Bit External Memory
INSTR/DATA
8
16
VR0F1628

9.7 EXTERNAL BUS TRANSFER CHARACTERISTICS

With regard to timing characteristics, there are basically two types of external buses which can be configured. These are multiplexed and non-multiplexed buses. Transfer characteristics for these two types are described in detail in the following.

9.7.1 Multiplexed Bus Transfer Characteristics

In both Multiplexed Bus modes, the resource ‘External Bus’ is time-shared between addresses and data. Figure 9.8 shows the timing sequence of a memory read and memory write access via a multiplexed bus.

A memory access is initiated by the controller by placing an address on the bus and then generating the Address Latch Enable signal (ALE). This signal triggers an external latch to capture the address. After a period of time during which the address must have been latched externally, the address is removed from the bus. Note that in the 16/18-bit Address, 8-bit Data, Multiplexed bus mode, only the lower eight bits of Port 0 are multiplexed on the external bus between address output and data input/output, while the upper eight bits of Port 0 continue to output address bits A15 to A8 throughout the entire memory access cycle. Note also that Port 4 is never time-multiplexed and continues to output the two most significant (segment) address bits A17 and A16.

Figure 9-8. Multiplexed External Bus Accesses

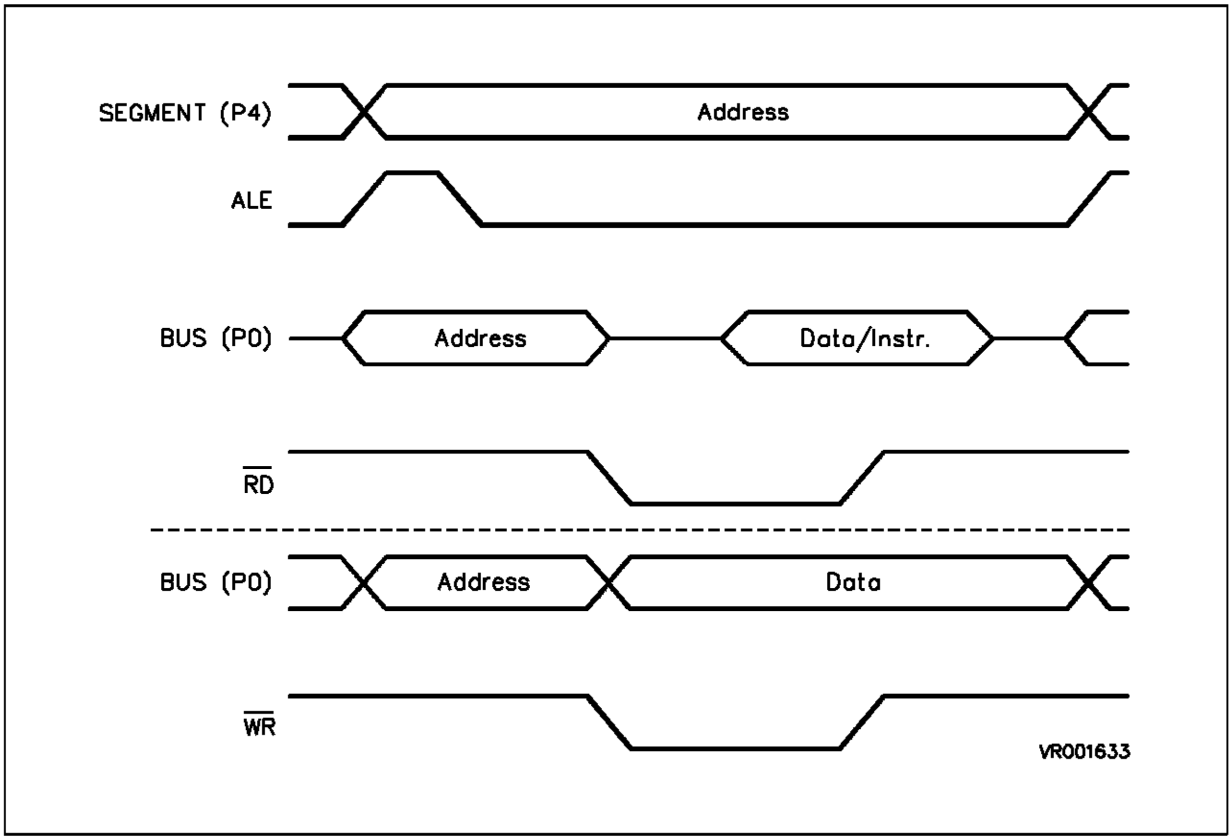

9.7.1.1 MULTIPLEXED BUS MEMORY READS

At the same time when the address is removed from the bus which is then tri-stated again, the active low memory read signal ($\overline{\text{RD}}$) is applied to the memory. This enables the memory to drive data onto the bus. After a period of time which is determined by the access time of the memory, data become valid on the bus.

Then, the controller latches the valid data from the bus and removes its memory read signal. This causes the memory to remove its data from the bus which is then tri-stated again.

9.7.1.2 MULTIPLEXED BUS MEMORY WRITES

After the address has been stored externally and removed from the bus again, data are driven onto the bus and the active low memory write signal ($\overline{\text{WR}}$) is applied to the memory. This enables the memory to store the data from the bus onto the addressed location. After a period of time which is determined by the access time of the memory, the data become valid in the addressed memory location. Then, the controller removes its memory write signal. The data remain valid on the bus until the next memory access cycle is started.

9.7.2 Non-Multiplexed Bus Transfer Characteristics

In the Non-Multiplexed Bus mode, there are separate buses for both the address and the data. Figure 9.9 shows the timing sequence of a memory read and memory write access via a non-multiplexed bus.

Figure 9-9. Non-Multiplexed External Bus Access

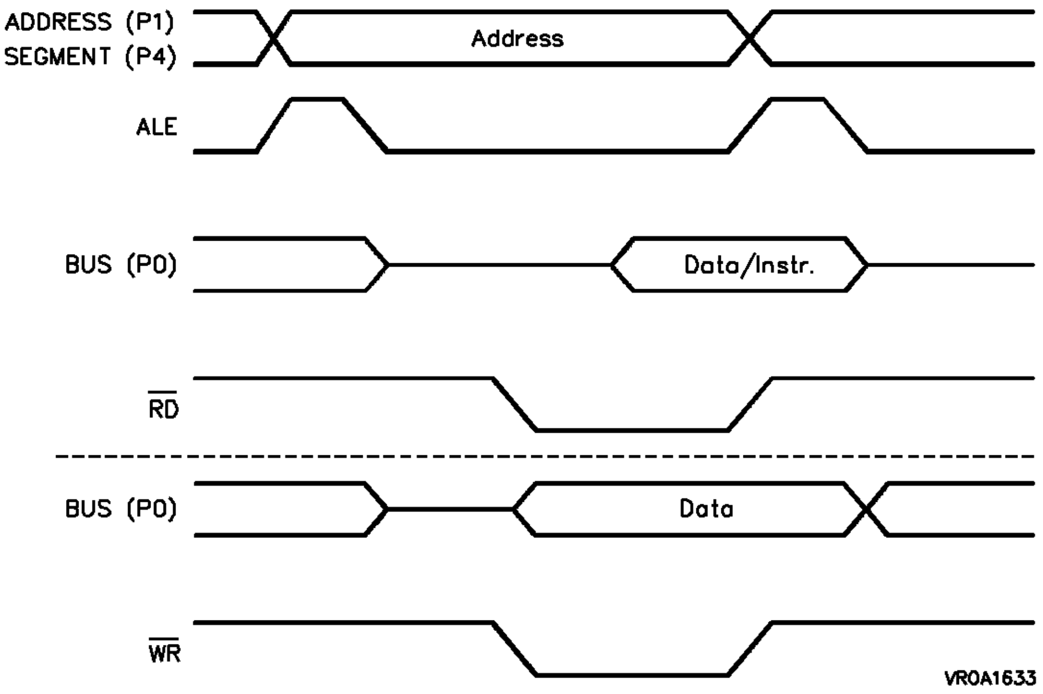

9.7.2.1 NON-MULTIPLEXED BUS MEMORY READS

A memory read access is initiated by the controller by placing an address on the address bus. This address stays valid on the bus until the next memory access cycle is started. After a fixed period of time, the active low memory read signal ($\overline{RD}$) is applied to the memory. This enables the memory to drive data onto the data bus. After a period of time which is determined by the access time of the memory, data become valid on the data bus. Then, the controller latches the valid data from the data bus and removes its memory read signal. This causes the memory to remove its data from the data bus which is then tri-stated again. Simultaneously with the removal of the $\overline{RD}$ signal, the controller puts the address for the next memory access on the address bus if a subsequent external memory access is required.

9.7.2.2 NON-MULTIPLEXED BUS MEMORY WRITES

A memory write access is initiated by the controller by placing an address on the address bus. This address stays valid on the bus until the next memory access cycle is started. After a fixed period of time, the controller drives its data onto the data bus and applies the active low memory write signal ($\overline{WR}$) to the memory. This enables the memory to store the data from the data bus onto the addressed location. After a period of time which is determined by the access time of the memory, the data become valid in the addressed memory location. Then, the controller removes its memory write signal and puts the address for the next memory access on the address bus if a subsequent external memory access is required. The data remain valid on the data bus until the next memory access cycle is started.

9.8 USER SELECTABLE BUS CHARACTERISTICS

Important timing characteristics of the external bus interface, including the Memory Cycle Time, the Memory Tri-State Time, the Read/Write Delay Time and the Address Latch Enable length have been made user programmable to allow adapting a wide range of different external bus and memory configurations with different types of memories. Note that internal memory access time are not extended by external waitstates.

Examples, tables and formulas showing the calculation of the user selectable bus characteristics can be found in the appendix, section ‘C’.

9.8.1 Programmable Memory Cycle Time

The ST10x166 allows the user to adjust the controller’s Memory Access Cycle Time to the Memory Cycle Time of the external memory being used. The Memory Cycle Time is the total time required to perform a memory access. It represents the period of time from the moment when the controller puts an address on the bus for the first time until the next external memory access can be started at the earliest. As shown in figure 9.10, the Memory Cycle Time determines how fast the memory can be accessed in general.

If an external memory is too slow, the controller must slow down in order to allow the memory to keep pace. The ST10x166 can be slowed down for external memory accesses by introducing wait states during the access. During these Memory Cycle Time wait states, the CPU is idle. Figure 9.11 shows when Memory Cycle Time wait states are introduced during the memory access.

The ST10x166 allows the user to program Memory Cycle Time wait states in increments of half a machine cycle within a range from 0 to 15 (default after reset). The Memory Cycle Time wait states can be configured via software by modifying the MCTC field of the SYSCON register, as shown in table 9.4. One Memory Cycle Time Wait State requires half a machine cycle (50ns at f_{OSC} = 40MHz).

By means of the Memory Cycle Time Wait States, the Memory Cycle Time can be varied as follows:

Multiplexed Bus Modes:

150ns - 900ns (at f_{OSC} = 40MHz)

Non-Multiplexed Bus Mode:

100ns - 850ns (at f_{OSC} = 40MHz)

These programmable Memory Cycle Time wait states can be specified for all of the external bus configuration modes.

9.8.2 Programmable Memory Tri-State Time

Table 9-4. MCTC Encoding of the Memory Cycle Time Wait States

MCTC				Number of Wait States	Additional Delay (at f_{osc} = 40MHz) [ns]
Bit 3	Bit 2	Bit 1	Bit 0		
0	**0**	**0**	**0**	**15**	**750**
0	**0**	**0**	**1**	**14**	**700**
0	**0**	**1**	**0**	**13**	**650**
0	**0**	**1**	**1**	**12**	**600**
0	**1**	**0**	**0**	**11**	**550**
0	**1**	**0**	**1**	**10**	**500**
0	**1**	**1**	**0**	**9**	**450**
0	**1**	**1**	**1**	**8**	**400**
1	**0**	**0**	**0**	**7**	**350**
1	**0**	**0**	**1**	**6**	**300**
1	**0**	**1**	**0**	**5**	**250**
1	**0**	**1**	**1**	**4**	**200**
1	**1**	**0**	**0**	**3**	**150**
1	**1**	**0**	**1**	**2**	**100**
1	**1**	**1**	**0**	**1**	**50**
1	**1**	**1**	**1**	**0**	**0**

Figure 9-10. Memory Cycle Time

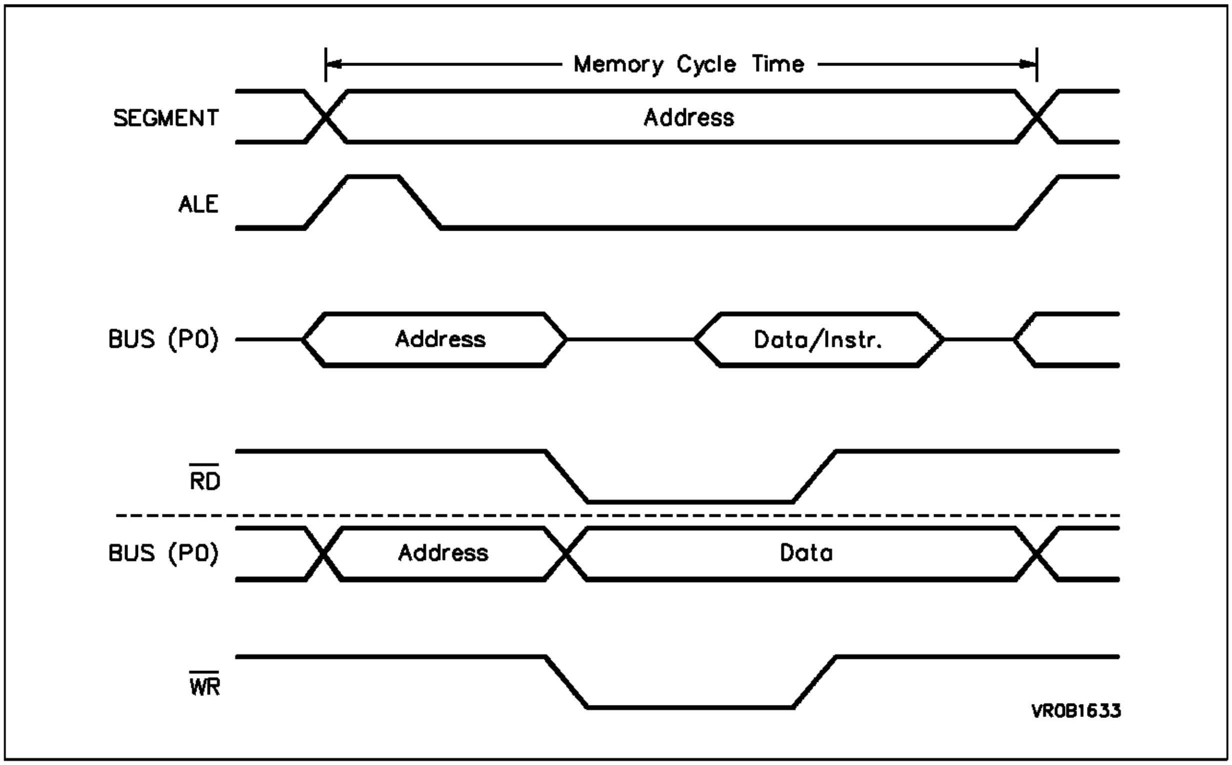
Memory Cycle Time
SEGMENT
Address
ALE
BUS (P0)
Address
Data/Instr.
RD
BUS (P0)
Address
Data
WR
VR0B1633

Figure 9-11. Memory Cycle Time Wait States

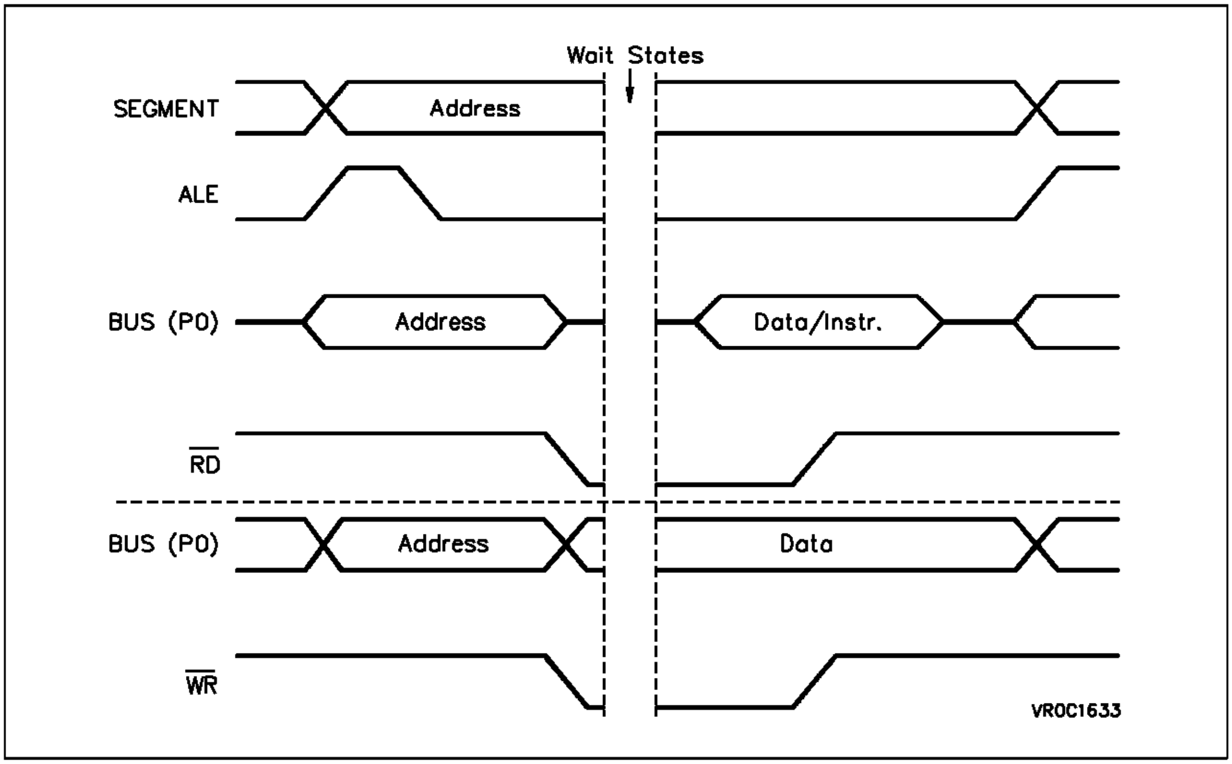
Wait States
SEGMENT
Address
ALE
BUS (P0)
Address
Data/Instr.
RD
BUS (P0)
Address
Data
WR
VR0C1633

The ST10x166 allows the user to adjust the time between two subsequent memory accesses to account for the Tri-State Time of the external memory being used. The Tri-State time is the time required by the memory to release the bus once the memory read ($\overline{RD}$) signal has been deasserted. As shown in figure 9.12, the Memory Tri-State Time determines how quickly one memory access can follow another.

If an external memory is too slow in releasing the bus after a memory read access, the controller must wait for putting the next address on the bus until the bus is tri-stated again. Therefore, an additional Memory Tri-State Time wait state must be introduced before the next memory access. The CPU is not idle during a Memory Tri-State Time wait state. Thus, CPU operations will only be slowed down if a subsequent external instruction or data fetch operation is required during the next instruction cycle. Figure 9.13 shows when a Memory Tri-State Time wait state is introduced during the external memory accesses.

The ST10x166 allows the user to program 0 or 1 (default after reset) Memory Tri-State Time wait state by means of the MTTC bit in the SYSCON register as shown in table 9.5. One Memory Tri-State Time Wait State requires half a machine cycle (50ns at f_{OSC} = 40MHz).

Table 9-5. Encoding of the Memory Tri-State Time Wait State

MTTC	Wait States
0	**Introduce One Wait State**
1	**Introduce No Wait States**

These programmable Memory Tri-State Time wait states can be specified for all of the external bus configuration modes. Note, however, that one implicit Memory Tri-State wait state is automatically added for both multiplexed external bus configuration modes.

Figure 9-12. Memory Tri-State Time

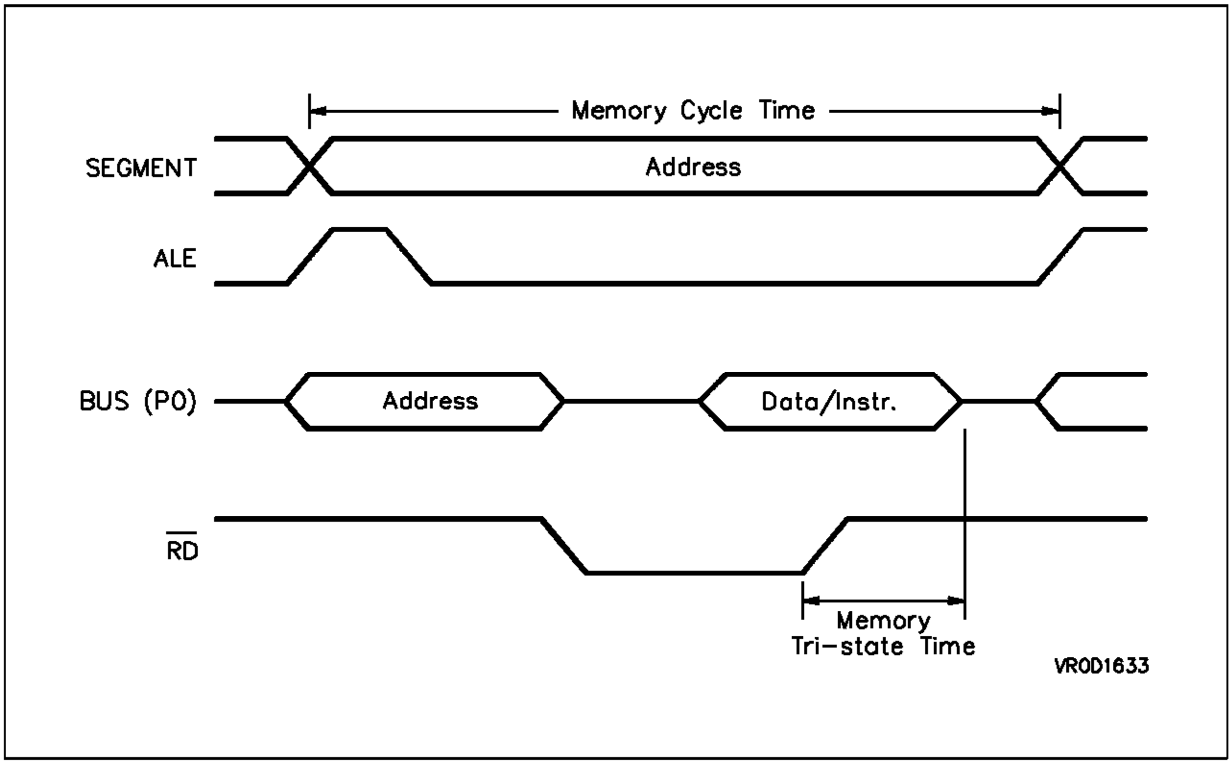
Memory Cycle Time
SEGMENT
Address
ALE
BUS (P0)
Address
Data/Instr.
$\overline{RD}$
Memory
Tri-state Time
VR0D1633

Figure 9-13. Memory Tri-State Time Wait States

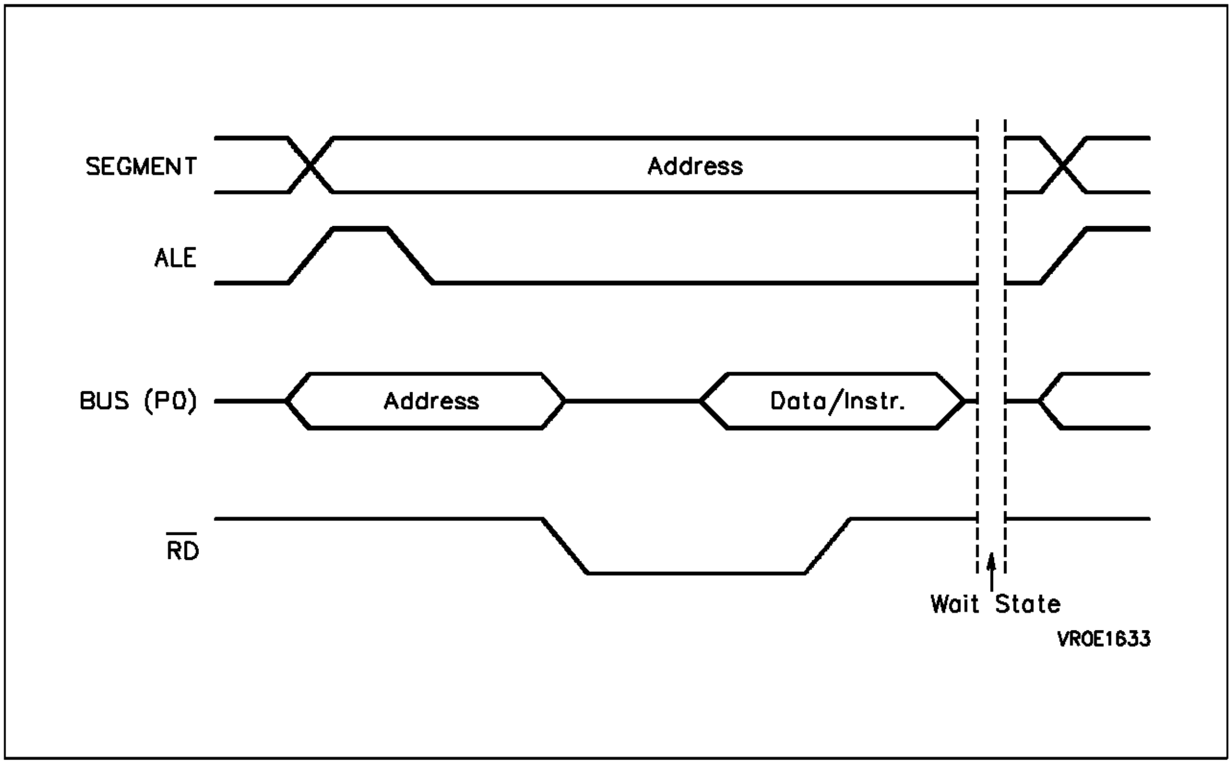
SEGMENT
Address
ALE
BUS (P0)
Address
Data/Instr.
$\overline{RD}$
Wait State
VR0E1633

9.8.3 Read/Write Signal Delay

The ST10x166 allows the user to adjust the timing of the data read and write output signals to account for timing requirements of external peripherals. As shown in figure 9.14, the Read/Write Delay represents the period of time between the falling edge of the Address Latch Enable (ALE) signal and the falling edge of the read ($\overline{\text{RD}}$) or write ($\overline{\text{WR}}$) signal. If no additional Read/Write Delay is programmed, the falling edges of the ALE, $\overline{\text{WR}}$ and $\overline{\text{RD}}$ signals are coincident. With the delay programmed, the falling edge of the ALE signal leads the falling edges of the $\overline{\text{RD}}$ or $\overline{\text{WR}}$ signal by a quarter of a machine cycle. An additional Read/Write Delay does not extend the Memory Cycle Time, and thus it does not slow down the controller in general.

The ST10x166 allows the user to disable or enable (default after reset) Memory Read/Write Signal Delays by means of the RWDC bit in the SYSCON register as shown in table 9.6. One Read/Write Signal Delay requires a quarter of a machine cycle (25ns at f_{OSC} = 40MHz).

Table 9-6. RWDC Encoding of The Read/Write Signal Delay

RWDC	ALE-RD/WR Delays
0	**Enabled**
1	**Disabled**

These programmable Read/Write Signal Delays can be specified for all of the external bus configuration modes.

Figure 9-14. Memory Read/Write Signal Delay

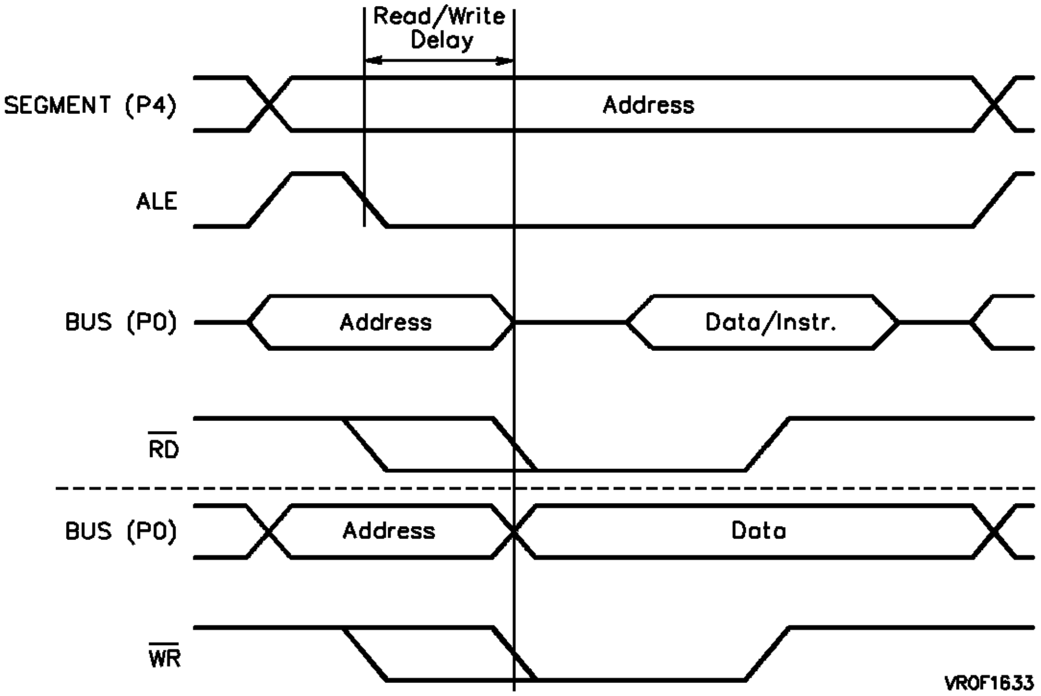

9.8.4 ALE signal delay

The ST10x166 allows the user to adjust the Address Latch Enable signal to account for the address setup and hold time of the external components being used. The Address Latch Enable signal is required to trigger an external latch which captures the address. Then after a period of time, during which the address has been latched, the address is removed from the ST10x166's bus.

If the external component need a longer address setup and hold times, the ST10x166's ALE pulse must be lengthened. This feature is provided by the ST10x166 with the ALECTL1 bit of BUSCON1 register.

When ALECTL1 is set to "1", any access within the address range defined by the ADDRSEL1 register, is lengthened by one T_{CL} (T_{CL}= 25ns at 20MHz CPU clock), and the address hold time after ALE is lengthened by one T_{CL}.

Figure 9.15 illustrates the bus cycle timing when ALECTL1 is set.

Figure 9-15. Timing With ALE Lengthening (Multiplexed Bus)

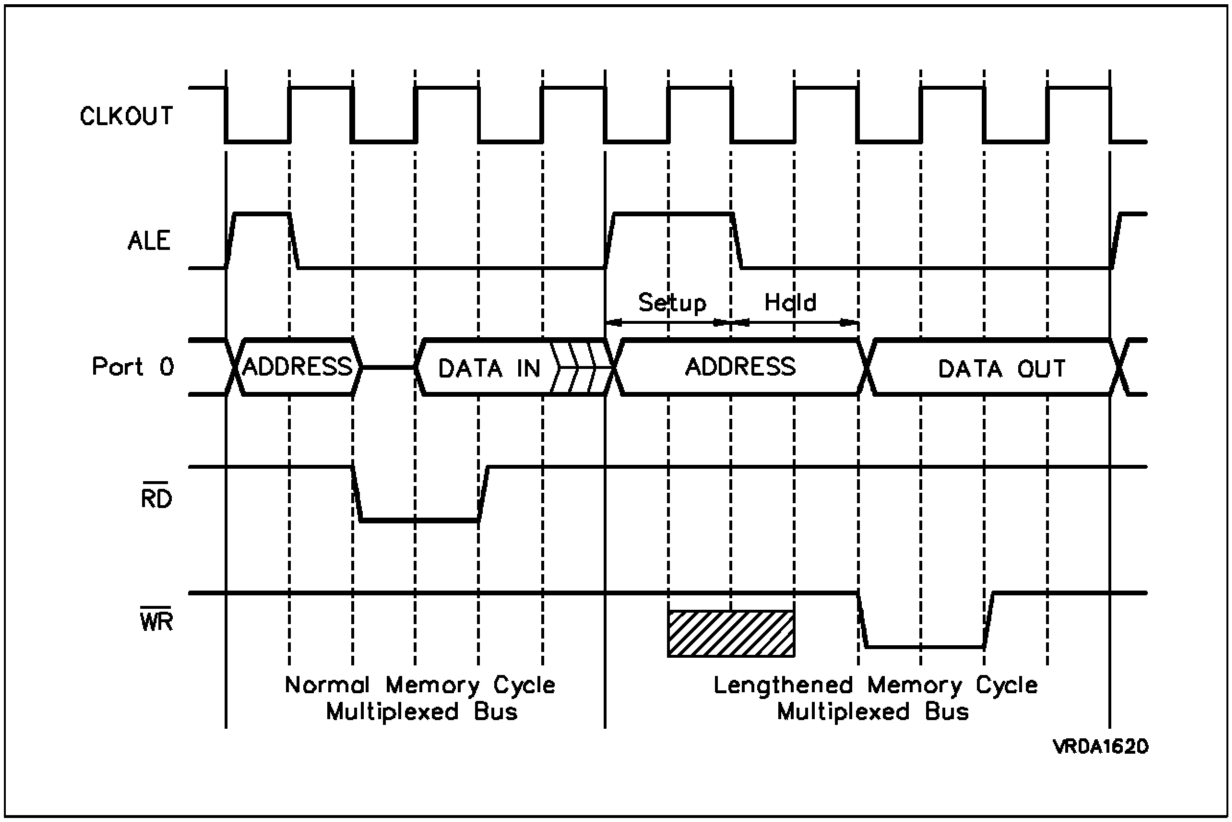
CLKOUT
ALE
Port 0
RD
WR
Setup
Hold
ADDRESS
DATA IN
ADDRESS
DATA OUT
Normal Memory Cycle
Multiplexed Bus
Lengthened Memory Cycle
Multiplexed Bus
VR0A1620

9.8.5 Switching between the Bus Modes.

With the features of the ST10x166, the different bus modes and the BUSCON1 register, it is possible to switch the bus characteristics 'on-the-fly'. One can change the number of wait states, switch from a multiplexed bus to a non-multiplexed bus or vice versa, or can use the READY function in a certain address range while operating without READY in the remaining address range. This can either be done by using the SYSCON and BUSCON1 registers with different parameters in certain address ranges, or by reprogramming the SYSCON or BUSCON1 register prior to an access which should be performed with different bus characteristics. However, it is not recommended or very useful to modify the SYSCON or BUSCON1 register which is currently being used for instruction fetches, since pipeline effects can make it very difficult to determine which of the following accesses will be made with the new configuration. Thus, it is recommended to modify bus configuration registers used for instruction fetches while executing instructions from either internal ROM, RAM, or from a different SYSCON or BUSCON1 address range. For example, if one wants to reprogram the BUSCON1 register, one should execute the instructions to modify the register from an address space which is currently controlled by the SYSCON register.

As mentioned before, it is possible to switch from an 8-bit data bus to a 16-bit data bus and vice versa, and to switch between a multiplexed and a non-multiplexed bus. There exists one condition, however, which presents a special case. When switching from a non-multiplexed bus to a multiplexed bus, an extra hold state is required due to timing constraints. In addition, Port 1, which is used for the address bus, continues to output the address, although the address will also appear at Port 0, time multiplexed with the data. This has the advantage, that the chip select logic, which is tied to the address bus, does not have to either be switched from Port 1 to Port 0 or vice versa. Figure 9.16 shows a timing diagram for switching from a non-multiplexed bus to a multiplexed bus.

Note: As long as any SYSCON or BUSCON1 selects a non-multiplexed bus, Port 1 is dedicated for the address bus function and can not be used as general purpose I/O port. In order to use Port 1 for general purpose I/O, both the SYSCON and the BUSCON1 register must select one of the multiplexed bus modes. This is also true for the READY function. In order to use the $\overline{\text{READY}}$ pin for general purpose I/O, RDYEN in register SYSCON and RDYEN1 in register BUSCON1 must be '0'.

Figure 9-16. Switching From Non-Multiplexed Bus to Multiplexed Bus

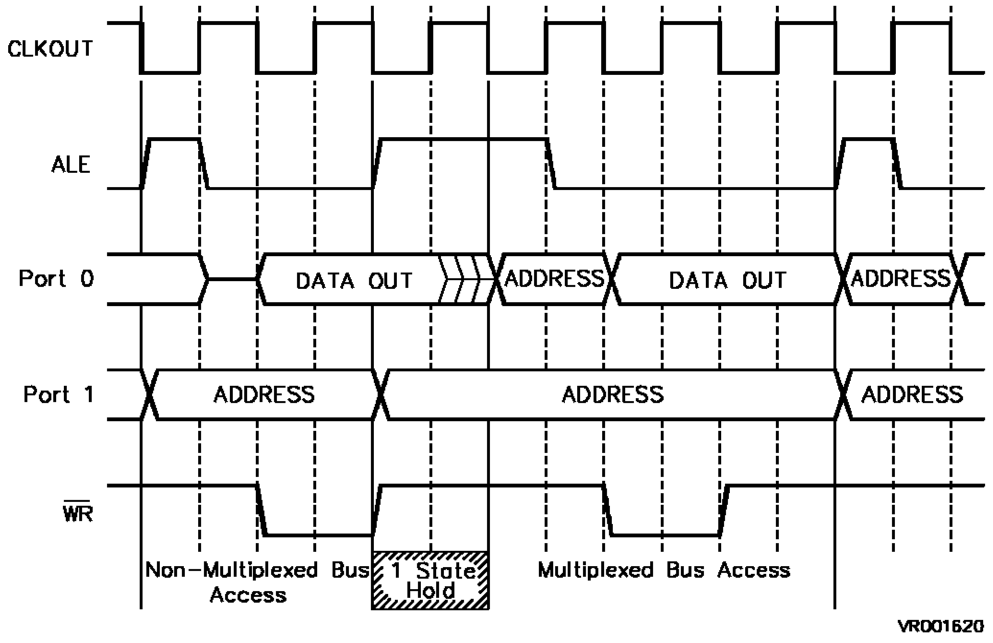

9.9 EXTERNAL MEMORY ACCESS VIA THE DATA READY SIGNAL

An optional Data-Ready function can be used to allow an external device to determine the duration of an external memory access. Note that the READY input pin must be correctly activated for every external memory access if the Data-Ready function has been enabled. Otherwise, the CPU would be halted until a reset occurs. No time-out protection other than a Watchdog Timer overflow is provided.

The Data-Ready function can be enabled by setting the RDYEN bit in the SYSCON register to '1' (see chapter 5).

When the Data-Ready function is enabled, the duration of all external accesses is determined as follows:

- **If 0 wait states are programmed in bits 0 to 2 of the MCTC field, the duration is determined by the state of the READY input pin.**
- **If between 1 and 7 wait states are programmed in bits 0 to 2 of the MCTC field, the CPU will first insert the programmed wait states into the memory cycle, and after the wait states has expired it will check the READY line and delay the memory access depending on the state of the READY line. This feature provides the following advantages for the user:**

  1) **Memory can be connected, operating with or without wait states, and peripherals, operating with READY, to the external bus of the ST10x166 and use wait states together with the READY function. If the memory is accessed, the chip select logic is used to bring the READY line to a LOW state. The CPU will insert the programmed number of wait states (if any) into the memory cycle, then check the READY line, find that the external device is ready (READY = '0'), and terminate the memory cycle. If the peripheral device is accessed, first the programmed wait states are inserted, and then the READY line is checked. For READY = 0, the bus cycle will be terminated. For READY = '1', the CPU will hold the bus cycle until READY goes to '0', and then terminate the cycle. Since normally peripherals operating with a READY function are much slower than memories, even memories requiring wait states, this will have no impact on the access time to the peripheral.**

  2) **When using the asynchronous READY function, the first time the READY line is checked is near the falling edge of the ALE signal. Thus, in order to guarantee a correct bus cycle the READY line has to present a valid logic level at this time point. Some peripherals, however, hold the READY line at a low state when they are not accessed, and require some time after being addressed by the CPU to signal their 'not ready' state, i.e. bring the READY line to a one. But, if the READY line is still low with the falling edge of the ALE signal, the CPU interprets this as 'external device is ready', and inserts no wait states during the following bus cycle. This problem is eliminated, since the CPU will first insert the programmed wait states before checking the READY line.**

Figure 9.17 a) and b) illustrate this feature. In this example, three wait states have been programmed

in field MCTC of register SYSCON in addition to the READY function. In Figure 9.17 a), the $\overline{\text{READY}}$ line goes to zero prior to the execution of the wait states, but the chip continues to hold the memory access cycle until all wait states are performed. This example could be the case when accessing a memory, which just requires three wait states, and where the $\overline{\text{READY}}$ line is brought to low with the Chip Select signal for the memory. In Figure 9.17 b), after insertion of all three wait states the $\overline{\text{READY}}$ line is checked and found to be high. The chip now continues to hold the memory access cycle until the $\overline{\text{READY}}$ line goes to low. Then the bus cycle is terminated. This example could be the case when accessing a slow peripheral device (which in this case is slower than a normal bus cycle with three wait states).

Figure 9-17. Using READY And Wait-States

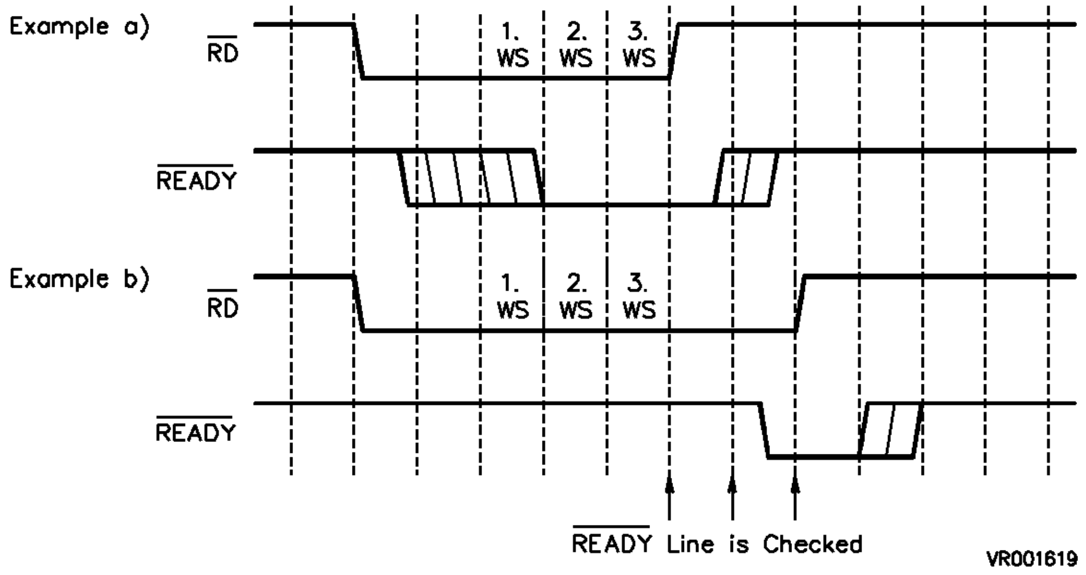

CHAPTER 10

PARALLEL PORTS

10. PARALLEL PORTS

The ST10x166 provides 76 parallel I/O lines organized into four 16-bit I/O ports (Port 0 through 3), one 2-bit I/O port (Port 4), and one 10-bit input port (Port 5). All port lines are bit addressable, and all lines of Port 0 through 4 are individually bit-wise programmable as inputs or outputs via direction registers.

Each port line has one programmable alternate input or output function associated with it. Port 0 and Port 1 may be used as the address and data lines when accessing external memory. Port 4 outputs the additional segment address bits A16 and A17 when segmentation is enabled. The pins of Port 2 serve as capture inputs or compare outputs for the CAPCOM unit, or as bus arbitration signals for communication with external DMA functions. Port 3 includes alternate input/output functions of CAPCOM timer T0, the general purpose timer blocks GPT1/2, and the serial channels ASC0/1. In addition, Port 3 provides the bus interface control signals $\overline{WR}$, $\overline{BHE}$, $\overline{READY}$, and the system clock CLKOUT. Port 5 is used for the analog input channels to the A/D converter.

All ports have Schmitt-Trigger input characteristics, except when used as external data bus and as analog inputs to the A/D converter.

The following subsections first give a general description of Ports 0 through 4, then each of these ports is described in detail. Port 5 will be discussed separately in section 10.2.

10.1 PORTS 0 THROUGH 4

Each of the Ports 0 through 4 has its own port data register (P0 through P4) and direction register (DP0 through DP4). The 16-bit data registers P0 through P3 for Ports 0 through 3, and the corresponding Port Direction control registers DP0 through DP3 are described below.

The 8-bit data register P4 for Port 4 is also described. Port 4 is actually a 2-bit port, but the data and direction registers of Port 4 are realized as byte-wide registers. Bits 2 through 7 are reserved bits, while bits 8 through 15 are unimplemented. Writing to the unimplemented bits has no effect, while reading always returns zero.

In the following, the symbol Px (x = 0 through 4) for a port data register is also used to refer to the whole Port x.

Ports 0 through 3 Data Registers

P0 **(FF00h / 80h)**
Reset Value :0000h

15	14	13	12	11	10	9	8
P0.15	P0.14	P0.13	P0.12	P0.11	P0.10	P0.9	P0.8

7	6	5	4	3	2	1	0
P0.7	P0.6	P0.5	P0.4	P0.3	P0.2	P0.1	P0.0

P1 **(FF04h / 82h)**
Reset Value :0000h

15	14	13	12	11	10	9	8
P1.15	P1.14	P1.13	P1.12	P1.11	P1.10	P1.9	P1.8

7	6	5	4	3	2	1	0
P1.7	P1.6	P1.5	P1.4	P1.3	P1.2	P1.1	P1.0

P2 **(FFC0h / E0h)**
Reset Value :0000h

15	14	13	12	11	10	9	8
P2.15	P2.14	P2.13	P2.12	P2.11	P2.10	P2.9	P2.8

7	6	5	4	3	2	1	0
P2.7	P2.6	P2.5	P2.4	P2.3	P2.2	P2.1	P2.0

P3 **(FFC4h / E2h)**
Reset Value :0000h

15	14	13	12	11	10	9	8
P3.15	P3.14	P3.13	P3.12	P3.11	P3.10	P3.9	P3.8

7	6	5	4	3	2	1	0
P3.7	P3.6	P3.5	P3.4	P3.3	P3.2	P3.1	P3.0

b15 to b0 =Px.y: **Port Px Data Register.**
(x = 0 through 3, y = 0 through 15).

P4 **(FF08h / 84h)**
Port 4 Data Register P4
Reset Value 0000h

7	6	5	4	3	2	1	0
R						P4.1	P4.0

b7 to b2 =R: **Reserved.**

b1 to b0 =P4.y: **Port P4 Data Register.**
(y = 0 through 1)

Ports 0 through 3 Direction Registers

DP0 **(FF02h / 81h)**
Reset Value : 0000h

15	14	13	12	11	10	9	8
DP0.15	DP0.14	DP0.13	DP0.12	DP0.11	DP0.10	DP0.9	DP0.8

7	6	5	4	3	2	1	0
DP0.7	DP0.6	DP0.5	DP0.4	DP0.3	DP0.2	DP0.1	DP0.0

DP1 **(FF06h / 83h)**
Reset Value : 0000h

15	14	13	12	11	10	9	8
DP1.15	DP1.14	DP1.13	DP1.12	DP1.11	DP1.10	DP1.9	DP1.8

7	6	5	4	3	2	1	0
DP1.7	DP1.6	DP1.5	DP1.4	DP1.3	DP1.2	DP1.1	DP1.0

DP2 **(FFC2h / E1h)**
Reset Value : 0000h

15	14	13	12	11	10	9	8
DP2.15	DP2.14	DP2.13	DP2.12	DP2.11	DP2.10	DP2.9	DP2.8

7	6	5	4	3	2	1	0
DP2.7	DP2.6	DP2.5	DP2.4	DP2.3	DP2.2	DP2.1	DP2.0

DP3 **(FFC6h / E3h)**
Reset Value : 0000h

15	14	13	12	11	10	9	8
DP3.15	DP3.14	DP3.13	DP3.12	DP3.11	DP3.10	DP3.9	DP3.8

7	6	5	4	3	2	1	0
DP3.7	DP3.6	DP3.5	DP3.4	DP3.3	DP3.2	DP3.1	DP3.0

b15 to b0 =DPx.y: **Port Px Direction Control.**
(x = 0 through 3, y = 0 through 15)
DPx.y = 0: Port Line Px.y is Input (high-impedance)
DPx.y = 1: Port Line Px.y is Output.

DP4 **(FF0Ah / 85h)**
Port 4 Direction Control Register DP4
Reset Value 0000h

7	6	5	4	3	2	1	0
R						DP4.1	DP4.0

b7 to b2 =R: **Reserved.**

b1 to b0 =DP4.y: **Port P4 Direction Control.**
(y = 0 through 1)
DP4.y = 0: Port Line P4.y is Input (high-impedance)
DP4.y = 1: Port Line P4.y is Output.

Using P0 through P4 as General Purpose I/O Ports

When the alternate input or output function associated with a port pin is not enabled, the pin can be used as a general purpose I/O pin. Each port pin consists of a port output latch, an output buffer, an input latch, an input (read) buffer, and a direction control latch. Each port pin can be individually programmed for input or output via the respective direction control bit DPx.y. Figure 10.1 shows a general block diagram of a port pin as it is configured when used as a general purpose I/O port.

Port pins selected as inputs (DPx.y = '0') are placed into a high-impedance state since the output buffer is disabled. This is the default configuration after reset. During reset, all port pins are configured for input. When exiting reset while no external bus function is selected, all port pins remain in input mode unless configured otherwise by the user. When an external bus is selected, the corresponding port pins are switched to the direction required by the selected bus type. This is explained in detail in the following sections.

The logic level of a pin is clocked into the input latch once per state time, regardless whether the port is configured for input or output.

A write operation to a port pin configured as an input causes the value to be written into the port output latch, while a read operation returns the latched state of the pin itself. A read-modify-write operation reads the value of the pin, modifies it, and writes it back to the output latch.

Writing to a pin configured as an output (DPx.y = '1') causes the output latch and the pin to have the written value, since the output buffer is enabled. Reading this pin returns the value of the output latch. A read-modify-write operation reads the value of the output latch, modifies it, and writes it back to the output latch, thus also modifying the level at the pin.

Figure 10-1. Block Diagram of a Port 0 through 4 General Purpose I/O Port

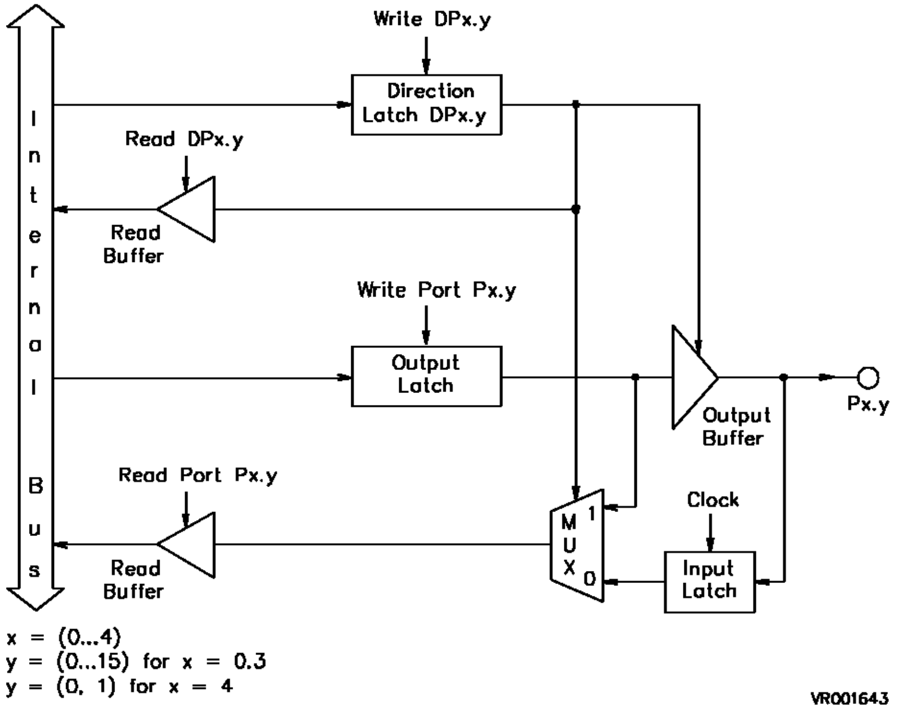

Alternate Input and Output Functions of P0 through P4

Each of the 76 port lines of the ST10x166 has an alternate input or output function associated with it. 34 port lines have both an alternate input and output function, the other 42 lines have either an alternate input or an alternate output function.

If an alternate output function of a pin is to be used, the direction of this pin must be programmed for output (DPx.y = ‘1’). Otherwise the pin remains in the high-impedance state and is not affected by the alternate output function.

If an alternate input function of a pin is used, the direction of the pin must be programmed for input (DPx.y =‘0’) if an external device is driving the pin. The input direction is the default after reset. If no external device is connected to the pin, however, one can also set the direction for this pin to output. In this case, the pin reflects the state of the port output latch. Thus, the alternate input function reads the value stored in the port output latch. This can be used for testing purposes to allow a software trigger of an alternate input function by writing to the port output latch.

On most of the port lines, the user software is responsible for setting the proper direction when using an alternate input or output function of a pin. This is done by setting or clearing the direction control bit DPx.y of the pin before enabling the alternate function. There are port lines, however, where the direction of the port line is switched automatically. For instance, in the multiplexed external bus modes of Port 0, the direction must be switched several times for an instruction fetch in order to output the addresses and to input the data. Obviously, this can not be done through instructions. In these cases, the direction of the port line is switched automatically by hardware if the alternate function of such a pin is enabled.

There is one basic structure for all port lines with only an alternate input function. Port lines with only an alternate output function, however, have different structures due to the way the direction of the pin is switched and depending on whether the pin is accessible by the user software or not in the alternate function mode.

The following sections describe in detail each of the ports and its alternate input and output functions.

10.1.1 Port 0 and Port 1

Port 0 and Port 1 are two 16-bit I/O ports. They are bit addressable, and each line can be programmed individually for input or output. When no external program and/or data memory is connected to the chip, Port 0 (P0) and Port 1 (P1) can be used as general purpose I/O ports.

As described in Chapter 9, ports P0 and P1 are used as the address and data lines in the various bus configurations which can be selected for connecting external memory to the chip. Port 0 is used in all 4 external bus configurations, while P1 is only used as the address bus (A15 - A0) in the 16/18-bit Address, Non-Multiplexed Bus mode. Port 1 can be used as a general purpose I/O port in the multiplexed external bus configuration modes.

When a multiplexed bus configuration is selected, and the CPU accesses external memory, Port 0 first outputs the 16-bit intra-segment address information as an alternate output function. Port 0 is then switched to the high-impedance input mode to read the incoming instruction or data. In the 16/18-bit Address, 8-bit Data Bus mode, two memory cycles are required for word accesses, the first for the low byte and the second for the high byte of the word. When data is written to an external memory, Port 0 outputs the data byte or word after outputting the address.

In the non-multiplexed bus configuration, Port 1 outputs the 16-bit intra-segment address, while Port 0 reads the incoming instruction or data word or writes the data to the external memory. Therefore, Port 0 has both alternate input and alternate output functions, while Port 1 has only an alternate output function. Figure 10.2 shows the structure of a Port 0 pin, and figure 10.3 shows the structure of a Port 1 pin.

When an external bus mode is enabled, the direction of the port pin and the data input to the port output latch are controlled by the bus controller hardware. The input to the port output latch is disconnected from the internal bus and is switched via a multiplexer to the line labeled Alternate Data Output. On Port 0, the alternate data can be the 16-bit intra-segment address or the 8/16-bit data information. On Port 1, the alternate data is the 16 bit intra-segment address in the non-multiplexed bus mode. The incoming data on Port 0 is read on the line Alternate Data Input. While an external bus mode is enabled, the user software should not write to the port output latch, otherwise unpredictable results may occur. When the external bus modes are again disabled, the contents of the direction register last written by the user become active. While the 16/18-Bit Address, 8-Bit Data, Non-Multiplexed Bus mode is enabled, the upper half of Port 0 can not be used for general purpose I/O,

Figure 10-2. Block Diagram of a Port 0 Pin

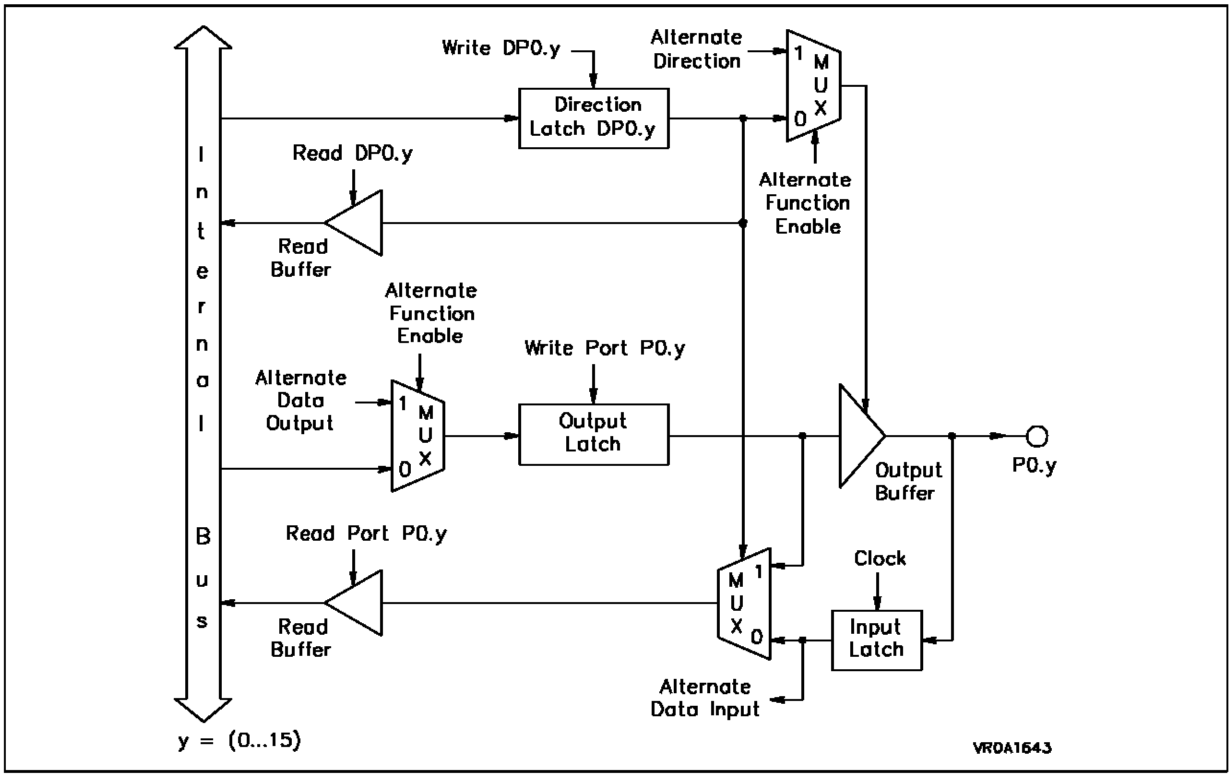
Internal Bus
y = (0...15)
Write DP0.y
Direction Latch DP0.y
Alternate Direction
1 MUX 0
Read DP0.y
Read Buffer
Alternate Function Enable
Alternate Function Enable
Alternate Data Output
1 MUX 0
Write Port P0.y
Output Latch
Output Buffer
P0.y
Read Port P0.y
Read Buffer
MUX 1 0
Clock
Input Latch
Alternate Data Input
VR0A1643

Figure 10-3. Block Diagram of a Port 1 Pin

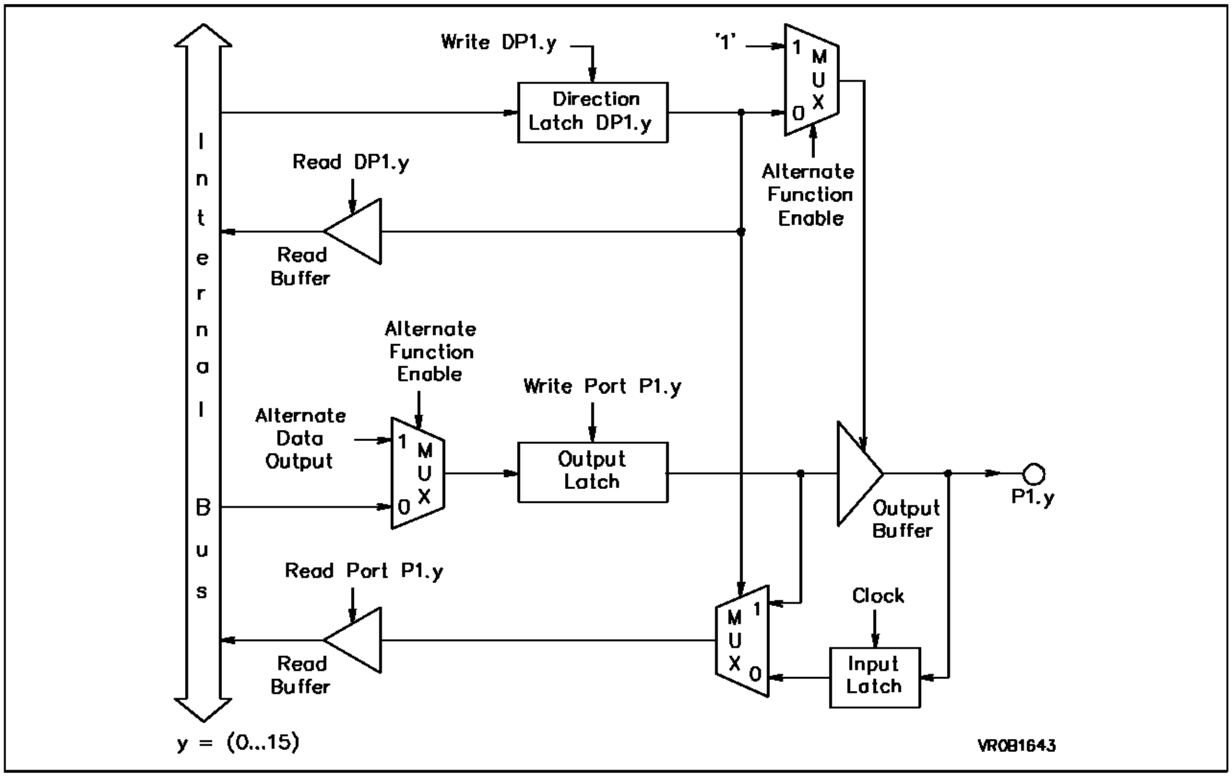
Internal Bus
y = (0...15)
Write DP1.y
Direction Latch DP1.y
'1'
1 MUX 0
Read DP1.y
Read Buffer
Alternate Function Enable
Alternate Function Enable
Alternate Data Output
1 MUX 0
Write Port P1.y
Output Latch
Output Buffer
P1.y
Read Port P1.y
Read Buffer
MUX 1 0
Clock
Input Latch
VR0B1643

10.1.2 Port 2

All of the 16 pins of Port 2 (P2) may be used for the alternate input/output functions of the CAPCOM unit. They serve as an input line for the capture function or as an output line for the compare functions. The alternate symbols CC0IO through CC15IO have been assigned to Port 2 in addition to the standard symbols P2.0 through P2.15 in order to reflect its alternate functions. Figures 10.4 to 10.6 show block diagrams of Port 2 pins.

When a Port 2 line is used as a capture input, the state of the input latch, which represents the state of the port pin, is directed to the CAPCOM unit via the line Alternate Pin Data Input. The user software must set the direction of the pin to input if an external capture trigger signal is used. If the direction is set to output, the state of the port output latch will be read since the pin represents the state of the output latch. This can be used to trigger a capture event through software by setting or clearing the port latch. Note that in the output configuration, no external device may drive the pin, otherwise conflicts would occur.

When a Port 2 line is used as a compare output (compare modes 1 and 3; refer to chapter 8.1), the compare event (or the timer overflow in compare mode 3) directly affects the port output latch. In compare mode 1, when a valid compare match occurs, the state of the port output latch is read by the CAPCOM control hardware via the line Alternate Latch Data Input, inverted, and written back to the latch via the line Alternate Data Output. The port output latch is clocked by the signal Compare Trigger which is generated by the CAPCOM unit. In compare mode 3, when a match occurs, the value '1' is written to the port output latch via the line Alternate Data Output. When an overflow of the corresponding timer occurs, a '0' is written to the port output latch. In both cases, the output latch is clocked by the signal Compare Trigger. The direction of the pin should be set to output by the user, otherwise the pin will be in the high-impedance state and will not reflect the state of the output latch.

Figure 10-4. Block Diagram of Port 2 Pin 0 to 12

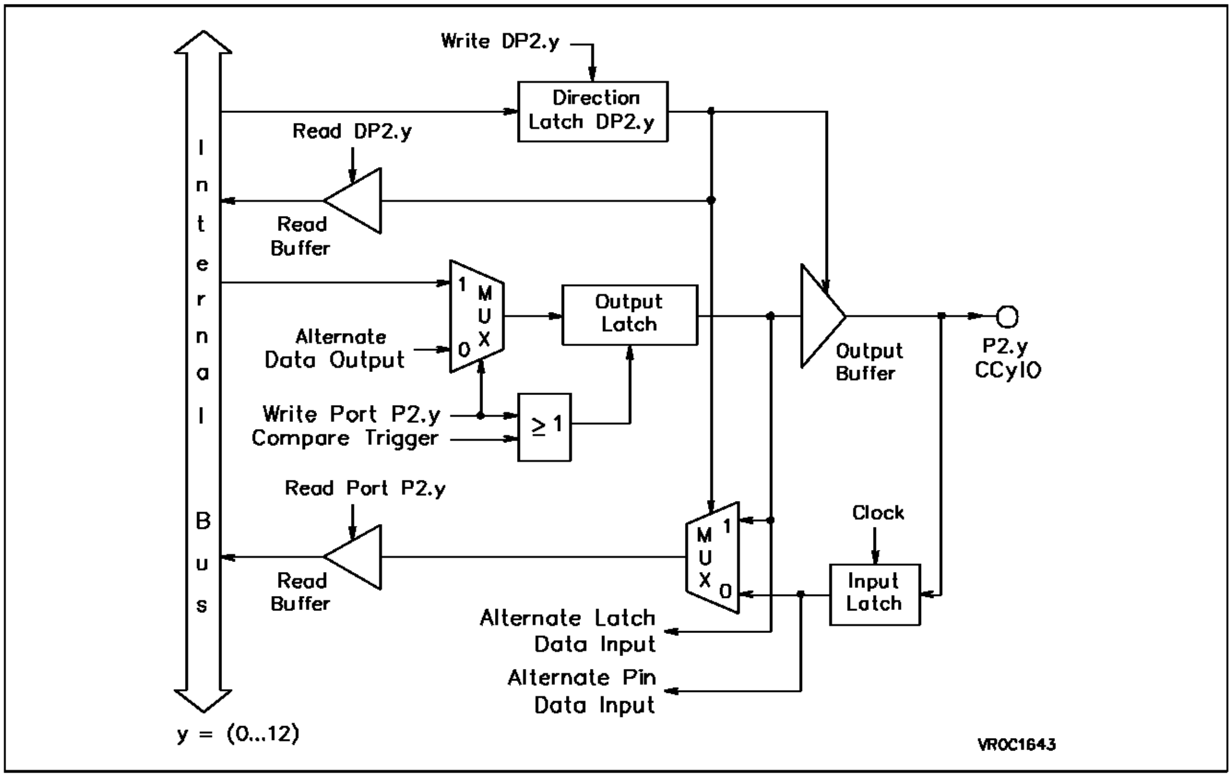
Write DP2.y
Direction Latch DP2.y
Read DP2.y
Read Buffer
Internal Bus
1
0
MUX
Output Latch
Alternate Data Output
Write Port P2.y
Compare Trigger
≥ 1
Output Buffer
P2.y
CCyIO
Read Port P2.y
Read Buffer
MUX
1
0
Clock
Input Latch
Alternate Latch Data Input
Alternate Pin Data Input
y = (0...12)
VR0C1643

Figure 10-5. Block Diagram of Port 2 Pin 13, 14

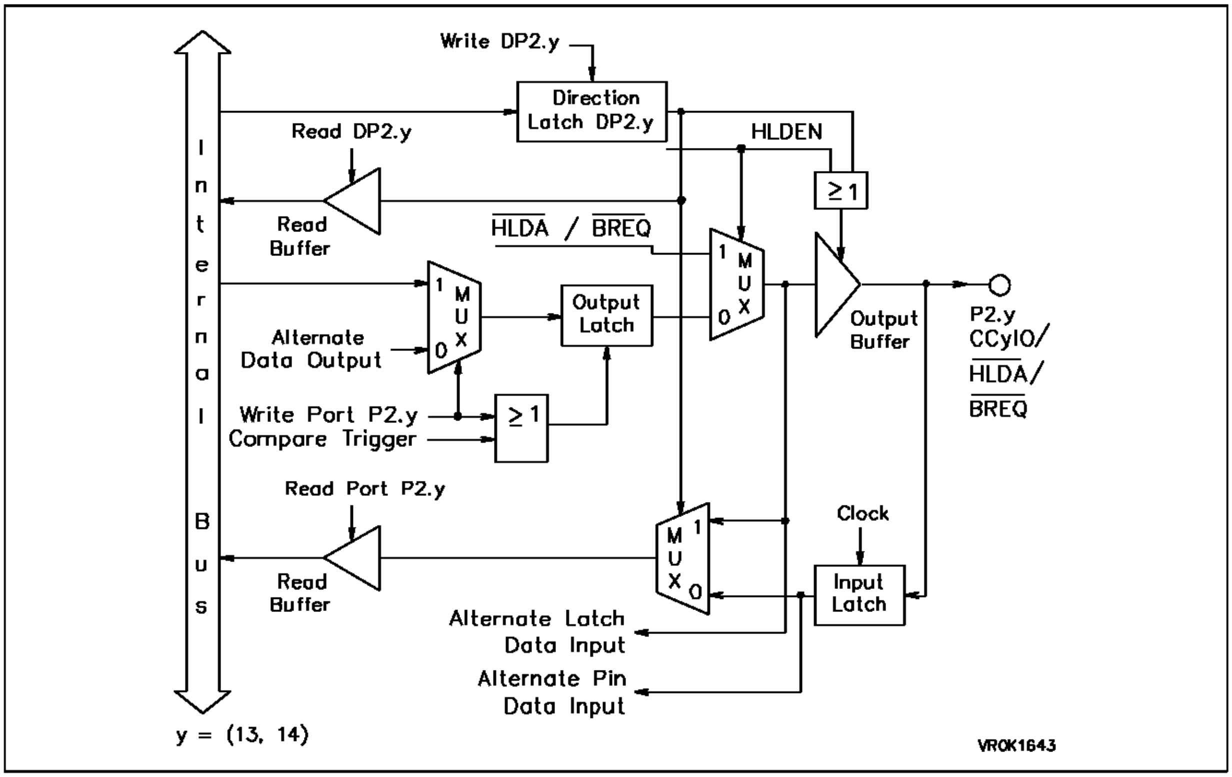
Write DP2.y
Direction Latch DP2.y
Read DP2.y
HLDEN
≥1
Internal Bus
Read Buffer
HLDA / BREQ
1 MUX 0
Output Latch
Alternate Data Output
Output Buffer
P2.y
CCyIO/
HLDA/
BREQ
Write Port P2.y
Compare Trigger
≥1
Read Port P2.y
Clock
Input Latch
Alternate Latch Data Input
Alternate Pin Data Input
y = (13, 14)
VR0K1643

Figure 10-6. Block Diagram of Port 2 Pin 15

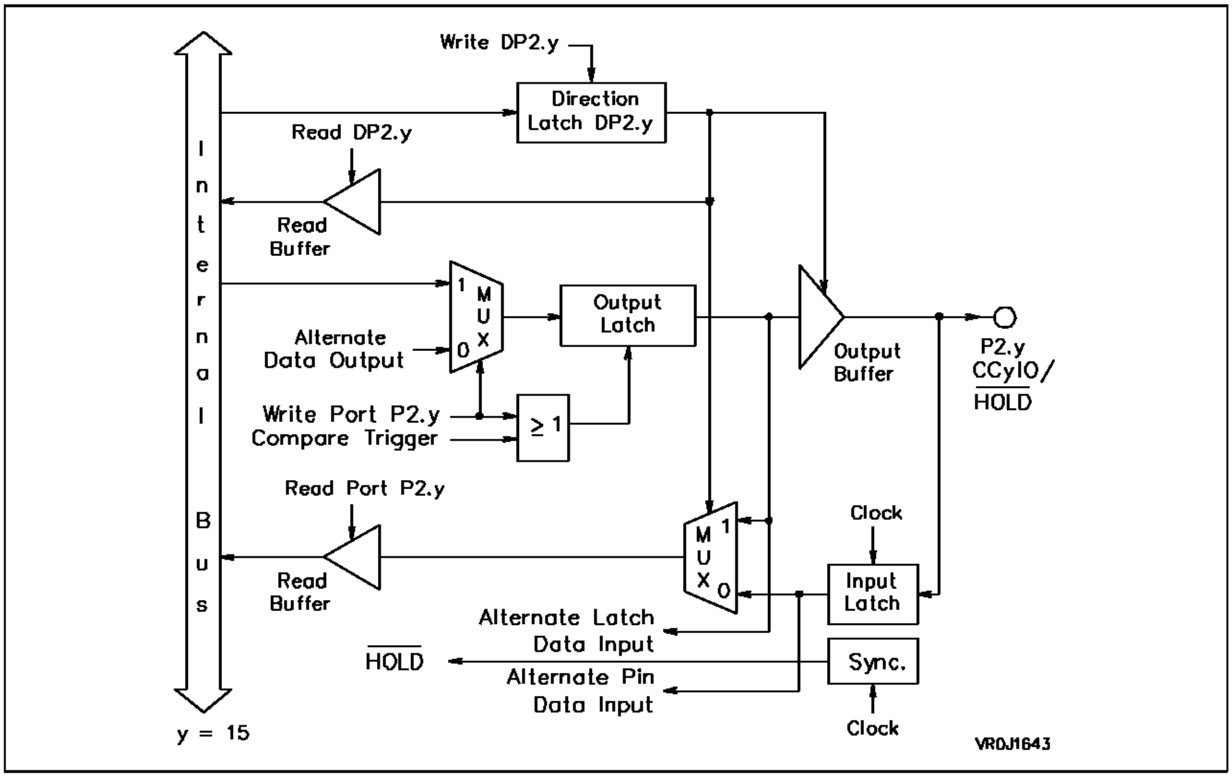
Write DP2.y
Direction Latch DP2.y
Read DP2.y
Internal Bus
Read Buffer
1 MUX 0
Output Latch
Alternate Data Output
Output Buffer
P2.y
CCyIO/
HOLD
Write Port P2.y
Compare Trigger
≥1
Read Port P2.y
Clock
Input Latch
Alternate Latch Data Input
HOLD
Sync.
Alternate Pin Data Input
Clock
y = 15
VR0J1643

As can be seen from the block diagram, the user software always has free access to the port pin even when it is used as a compare output. This is useful for setting up the initial level of the pin when using compare mode 1 or the double-register mode. In these modes, unlike in compare mode 3, the pin is not set to a specific value when a compare match occurs. Instead, it is toggled.

When the user wants to write to the port pin at the same time a compare trigger tries to clock the output latch, the write operation of the user software has priority. Each time a CPU write access to the port output latch occurs, the input multiplexer of the port output latch is switched to the line connected to the internal bus. The port output latch will receive the value from the internal bus. The hardware triggered change will be lost.

In order to support multi-master systems and communication with external DMA functions, three pins of Port 2 provide a bus arbitration.

The pin P2.15 configured in its alternate function $\overline{\text{HOLD}}$ is an input. When brought to low (active state), this input indicates to the ST10x166 that another master wants to perform one or several accesses on the external bus of the ST10x166. After synchronisation of this signal and complete termination of the current external bus cycle if any, the ST10x166 backs off its external bus and activates the signal $\overline{\text{HLDA}}$ to flag the second master that the bus is now free. This condition will be held until the $\overline{\text{HOLD}}$ line goes back to high. Then the signal $\overline{\text{HLDA}}$ is disabled and the ST10x166 takes over control of the external bus again if required. During the HOLD phase, the ST10x166 can still operate and fetch instruction or data when executing out of internal memory. The CPU really stops execution if external data or instruction fetches are required. The pin P2.14 used as hold acknowledge signal $\overline{\text{HLDA}}$ is active low. This signal indicates to the second master that the bus of the ST10x166 is now free for use.

The pin P2.13 is used as second alternate function of bus request signal $\overline{\text{BREQ}}$. This signal intends to give the ST10x166 a chance to flag its own external bus request to the second master. The second master can then decide whether or not to grant the ST10x166 the external bus for one or more external bus accesses.

To enable these bus arbitration signals, the bit HLDEN of the PSW register must be set. After reset, once this bit has been set to ‘1’ these three pins of Port 2 can no longer be used for general purpose I/O or for the CAPCOM unit, even if this HLDEN bit is cleared after once being set.

During an external HOLD request acknowledged, the ST10x166 set the external address, data, and control bus to the following states:

Port 0	Tri-state, if an external bus is enabled
Port 1	Tri-state, if a non-multiplexed bus mode is selected
Port 4	Tri-state, if an external bus and segmentation are enabled
ALE	Float to ’0’ through high-impedance pull down
$\overline{\text{RD}}$	Float to ’1’ through high-impedance pull up
$\overline{\text{WR}}$	Tri-state even when used as general purpose I/O pin
$\overline{\text{BHE}}$	Tri-state, if BHE function enabled
$\overline{\text{READY}}$	No change

Figure 10.7 and 10.8 illustrate the timings for entry and exit from HOLD mode.

Figure 10-7. Timing For Entry Into Hold (Non-Multiplexed Bus)

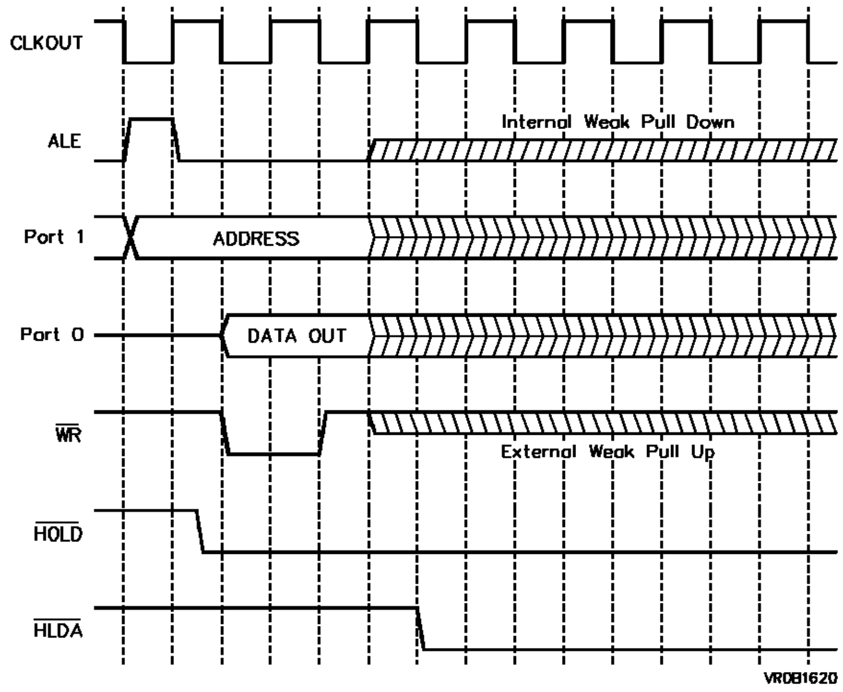
CLKOUT
ALE
Internal Weak Pull Down
Port 1
ADDRESS
Port 0
DATA OUT
WR
External Weak Pull Up
HOLD
HLDA
VR0B1620

Figure 10-8. Timing For Exit From Hold (Non-Multiplexed Bus)

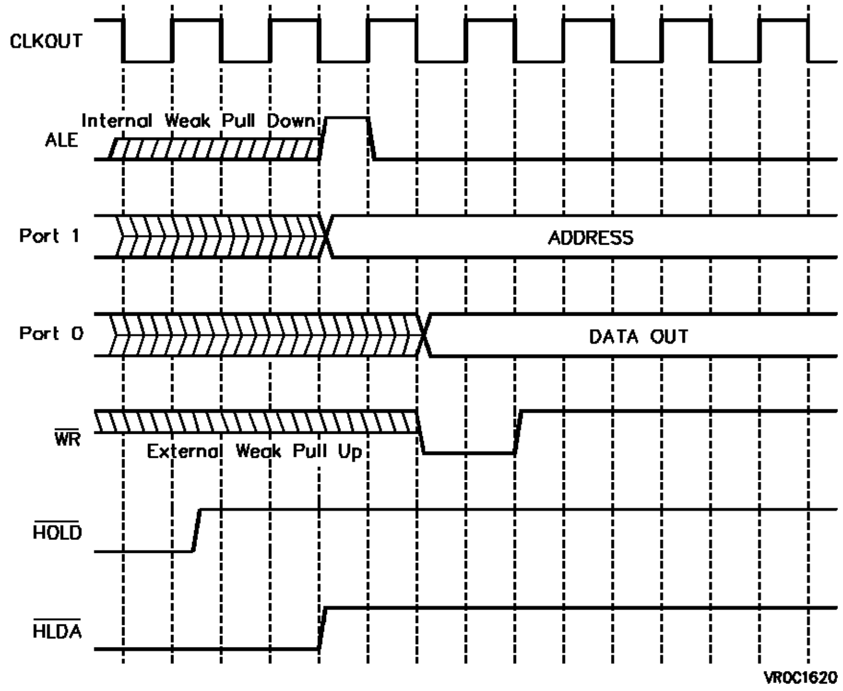
CLKOUT
Internal Weak Pull Down
ALE
Port 1
ADDRESS
Port 0
DATA OUT
WR
External Weak Pull Up
HOLD
HLDA
VR0C1620

10.1.3 Port 3

Each of the 16 pins of Port 3 (P3) has an alternate input or output function associated with it. Seven pins have an alternate input function, seven pins have an alternate output function, and two pins, RXD0 and RXD1, have an alternate input or output function depending on the operating mode of the serial channel they are associated with. The alternate functions of Port 3 are listed in table 10.1.

When the alternate input or output function of a Port 3 pin is not used, this pin can be used as a general purpose I/O pin. When an alternate function is used on a Port 3 pin, the configuration of this pin depends on the type of the alternate function. There are four different configurations described in the following paragraphs.

Table 10-1. Port 3 Alternate Input/Output Functions

Symbol	Alternate Symbol	Input/Output	Function
P3.0	T0IN	I	Timer 0 Count Input
P3.1	T6OUT	O	Timer 6 Toggle Latch Output
P3.2	CAPIN	I	CAPREL Register Capture Input
P3.3	T3OUT	O	Timer 3 Toggle Latch Output
P3.4	T3EUD	I	Timer 3 External Up / Down Control Input
P3.5	T4IN	I	Timer 4 Count / Gate / Reload / Capture Input
P3.6	T3IN	I	Timer 3 Count / Gate Input
P3.7	T2IN	I	Timer 2 Count / Gate / Reload / Capture Input
P3.8	TXD1	O	Serial Channel 1 Data Output in Asynchronous Mode; Clock Output in Syncrhonous Mode
P3.9	RXD1	I/O	Serial Channel 1 Data Input in Asynchronous Mode; Data Input / Output in Synchronous Mode
P3.10	TXD0	O	Serial Channel 0 Data Output in Asynchronous Mode; Clock Output in Synchronous Mode
P3.11	RXD0	I/O	Serial Channel 0 Data Input in Asynchronous Mode; Data Input / Output in Synchronous Mode
P3.12	$\overline{\text{BHE}}$	O	Byte High Enable Control Signal for External Memory
P3.13	$\overline{\text{WR}}$	O	Write Strobe for External Data Memory
P3.14	$\overline{\text{READY}}$	I	Ready Input
P3.15	CLKOUT	O	System Clock Output

10.1.3.1 PORT 3 PINS T0IN, T2IN, T3IN, T4IN, T3EUD, CAPIN, AND READY

The basic structure of these seven Port 3 pins, which only have an associated alternate input function, is identical, as shown in figure 10.9. Note that the READY pin has an additional alternate input line which is tied directly to the pin. This line is used for the synchronous Ready function.

When the on-chip peripheral associated with such a pin is configured to use the alternate input function, it reads the input latch, which represents the state of the pin, via the line labeled Alternate Data Input. If an external device is driving the pin, the direction of the pin must be set to input. When no external device is connected to the pin, one can set the direction to output and write to the port output latch to trigger the Alternate Data Input line.

Figure 10-9. Block Diagram of a Port 3 Pin With an Alternate Input Function

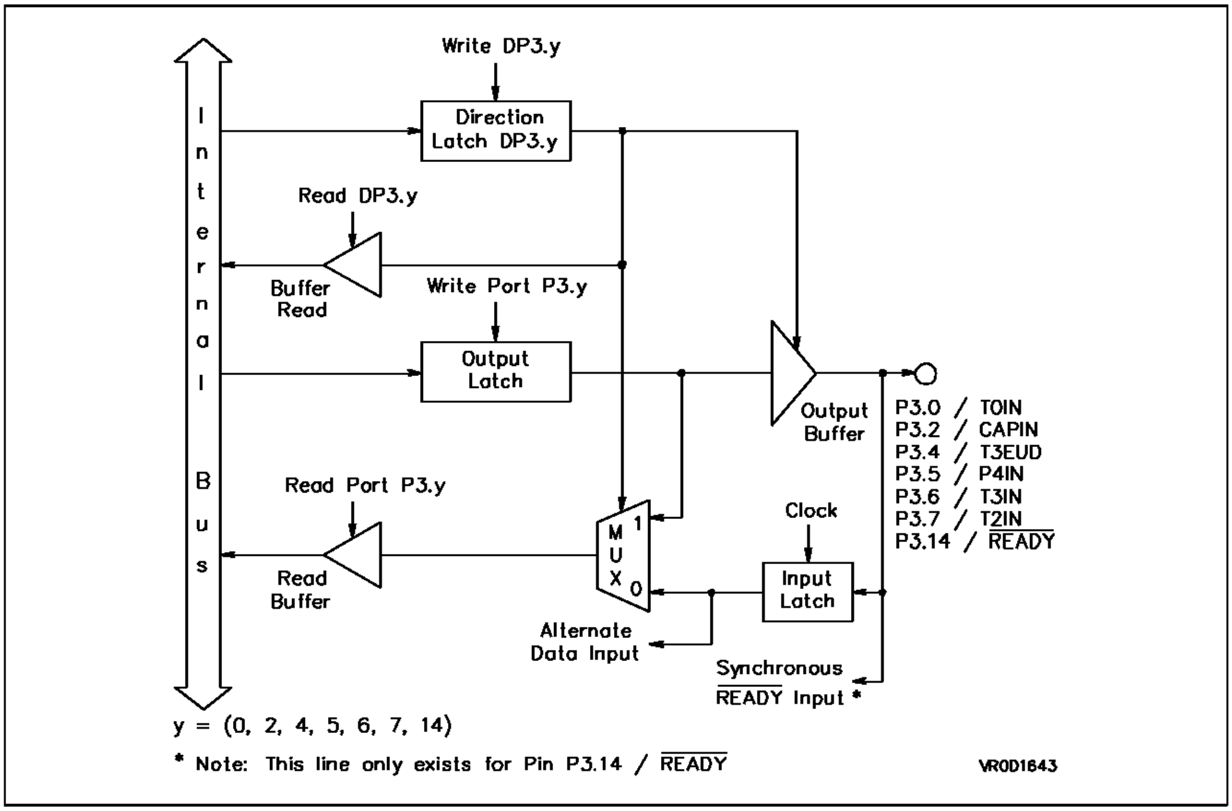
Write DP3.y
Direction Latch DP3.y
Internal Bus
Read DP3.y
Buffer Read
Write Port P3.y
Output Latch
Output Buffer
P3.0 / T0IN
P3.2 / CAPIN
P3.4 / T3EUD
P3.5 / P4IN
P3.6 / T3IN
P3.7 / T2IN
P3.14 / READY
Read Port P3.y
Read Buffer
MUX
1
0
Clock
Input Latch
Alternate Data Input
Synchronous READY Input *
y = (0, 2, 4, 5, 6, 7, 14)
* Note: This line only exists for Pin P3.14 / READY
VR0D1643

10.1.3.2 PORT 3 PINS T3OUT, T6OUT, TXD0, TXD1, WR, CLKOUT

These six of the seven Port 3 pins which have only an alternate output function associated also have an identical structure, shown in figure 10.10. The Alternate Data Output line, which is controlled by the respective peripheral unit, is ANDed with the port output latch line. When using these alternate functions, the user must set the direction of the port line to output (DP3.y = '1') and must write a '1' into the port output latch. Otherwise the pin is in its high-impedane state (when configured as input) or the pin is stuck at '0' (when writing a '0' into the port output latch). When the alternate output functions are not used, the Alternate Data Output line is in its inactive state, which is a high level ('1').

Figure 10-10. Block Diagram of a Port 3 Pin With an Alternate Output Function

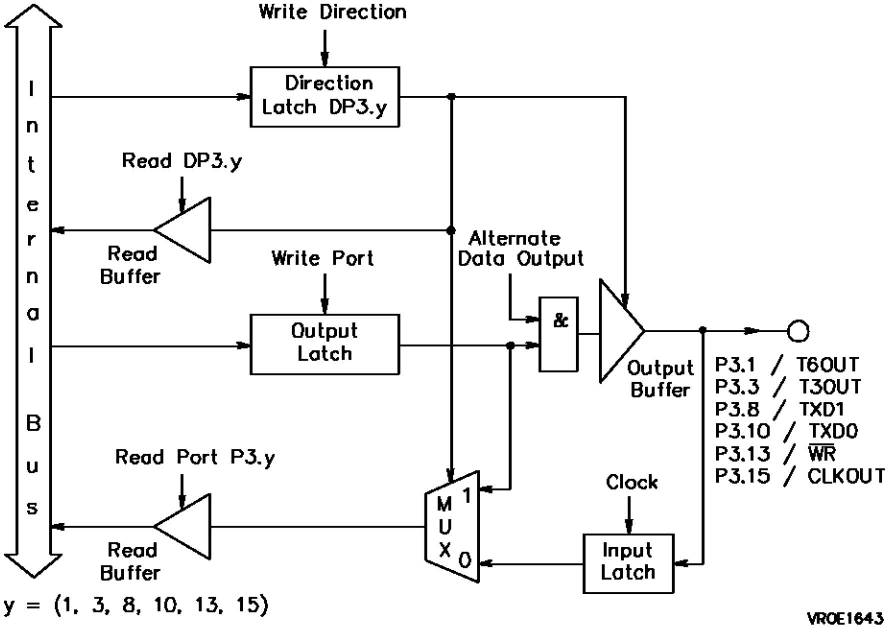
Internal Bus
Write Direction
Direction Latch DP3.y
Read DP3.y
Read Buffer
Write Port
Output Latch
Alternate Data Output
&
Output Buffer
P3.1 / T6OUT
P3.3 / T3OUT
P3.8 / TXD1
P3.10 / TXD0
P3.13 / $\overline{WR}$
P3.15 / CLKOUT
Read Port P3.y
Read Buffer
MUX
1
0
Clock
Input Latch
y = (1, 3, 8, 10, 13, 15)
VR0E1643

10.1.3.3 PORT 3 PIN $\overline{\text{BHE}}$

Figure 10.11 shows the block diagram of pin P3.12/$\overline{\text{BHE}}$, which is the seventh Port 3 pin with only an alternate output function. Since the $\overline{\text{BHE}}$ signal might be required directly after reset when an external 16-bit data bus mode (multiplexed or non-multiplexed) is selected through pins EBC1 and EBC0, there is no way the user can configure the $\overline{\text{BHE}}$ pin. Thus, it will be switched automatically to the alternate function.

When an external 16-bit data bus mode is selected AND the $\overline{\text{BHE}}$ function is enabled through bit BYTDIS = ‘0’ in register SYSCON (default after reset), the two multiplexers in the port data output line and the port direction control line are switched. The direction is set to ‘1’ (output), and the pin is controlled by the Alternate Data Output line.

If the $\overline{\text{BHE}}$ pin is not required in an application, the user can disable the function by setting bit BYTDIS to ‘1’. The pin can then be used for general purpose I/O.

Figure 10-11. Block Diagram of Port 3 Pin $\overline{\text{BHE}}$

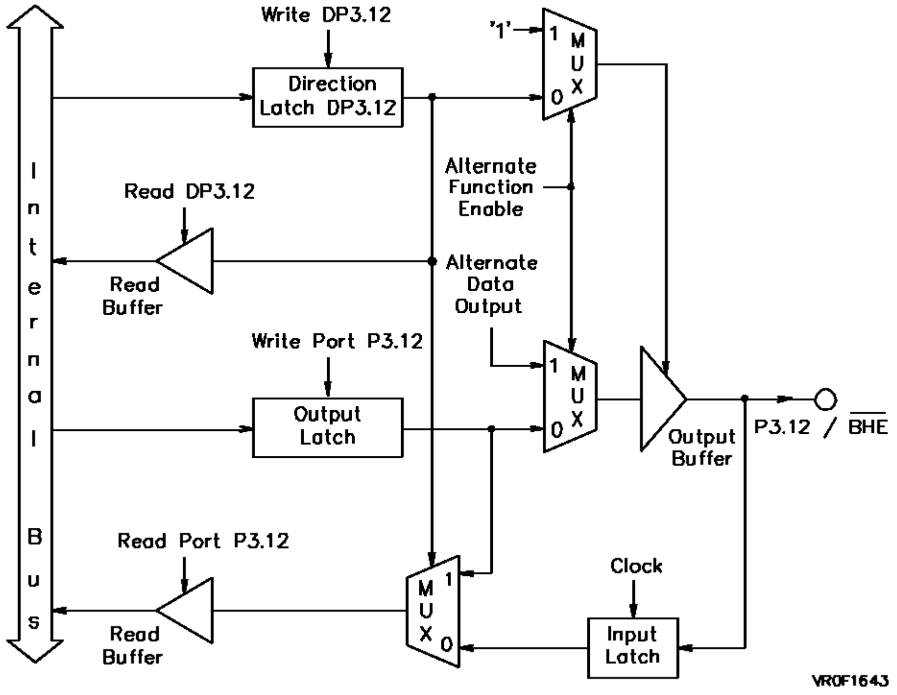
Internal Bus
Write DP3.12
Direction Latch DP3.12
'1'
1 MUX 0
Read DP3.12
Read Buffer
Alternate Function Enable
Alternate Data Output
Write Port P3.12
Output Latch
1 MUX 0
Output Buffer
P3.12 / $\overline{\text{BHE}}$
Read Port P3.12
Read Buffer
MUX 1 0
Clock
Input Latch
VR0F1643

10.1.3.4 PORT 3 PINS RXD0 AND RXD1

The configuration of the two pins RXD0 and RXD1, with both an alternate input and an alternate output function, is shown in figure 10.12. The Alternate Data Output line again is ANDed with the port output latch line.

In the asynchronous modes of the Serial Channels, pins RXD0 and RXD1 are always used as data inputs. The direction of these pins must be set to input by the user (DP3.y = '0'). The Serial Channels read the state of pins RXD0 and RXD1 via the line Alternate Data Input.

In the half-duplex synchronous mode, pins RXD0 and RXD1 are used as either data inputs or outputs. For transmission, the user first must set the direction to output (DP3.y = '1') and must write a '1' into the port output latch. For reception, the user must set the direction to input before starting the reception. When the alternate output function on these pins is not used, the Alternate Data Output line is in its inactive state, which is a high level ('1').

Figure 10-12. Block Diagram of Port 3 Pins RXD0 and RXD1

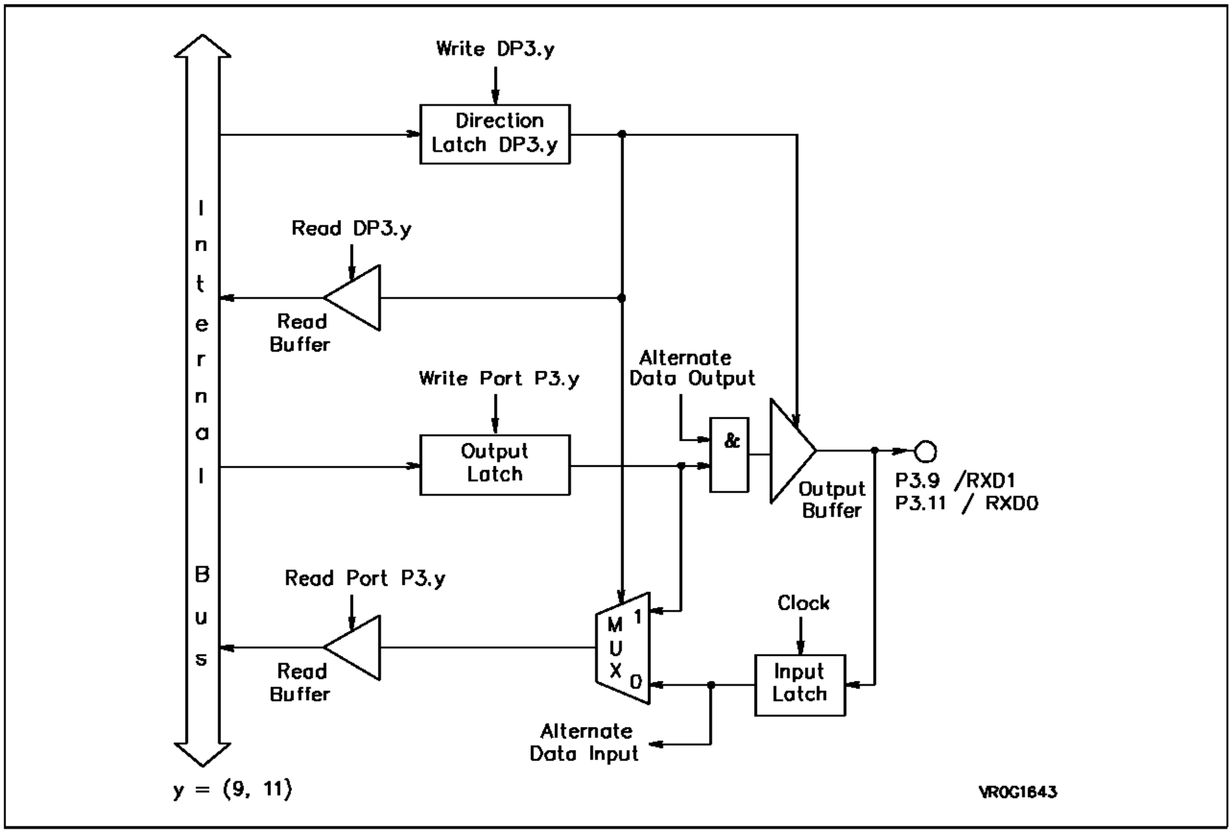
Write DP3.y
Direction Latch DP3.y
Internal Bus
Read DP3.y
Read Buffer
Write Port P3.y
Output Latch
Alternate Data Output
&
Output Buffer
P3.9 /RXD1
P3.11 / RXD0
Read Port P3.y
Read Buffer
MUX
1
0
Clock
Input Latch
Alternate Data Input
y = (9, 11)
VR0G1843

10.1.4 Port 4

The alternate functions on the two pins of Port 4 (P4) are the two segment address lines A16 and A17, shown in table below. As for Port 0, Port 1, and the $\overline{BHE}$ signal, the alternate function of Port 4 might be required directly after reset. Thus, the alternate function of Port 4 will be switched automatically.

Table 10-2. Port 4 Alternate Output Functions

Symbol	Alternate Symbol	Input/Output	Function
P4.0	**A16**	**O**	**Lower Address Line of Segment Address**
P4.1	**A17**	**O**	**Higher Address Line of Segment Address**

Figure 10.13 shows a block diagram of a Port 4 pin, which is the same as for a Port 1 pin. When an external bus is selected AND segmentation is enabled through bit SGTDIS = ‘0’ in register SYSCON (default after reset), the input to the port output latch is switched via a multiplexer from the internal bus to the Alternate Data Output line, which supplies the segment address. Via a second multiplexer, the output buffer is enabled to drive the segment address.

If segmentation is not required in an application, the user can disable segmentation by setting bit SGTDIS to ‘1’. The pins of Port 4 can then be used for general purpose I/O.

Figure 10-13. Block Diagram of a Port 4 Pin

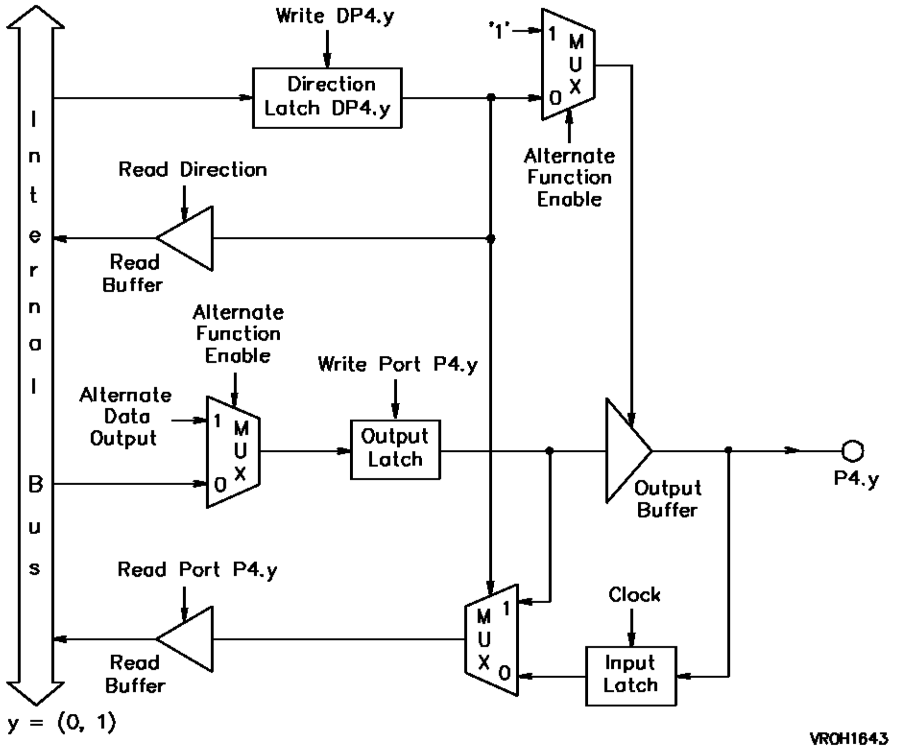
Internal Bus
Write DP4.y
Direction Latch DP4.y
'1'
1
M U X
0
Alternate Function Enable
Read Direction
Read Buffer
Alternate Function Enable
Write Port P4.y
Alternate Data Output
1
M U X
0
Output Latch
Output Buffer
P4.y
Read Port P4.y
Clock
M U X
1
0
Input Latch
Read Buffer
y = (0, 1)
VR0H1643

10.2 Port 5

Port 5 (P5) differs from Ports 0 through 4, since it is a 10-bit input only port. Besides being used as a digital input port, all lines of Port 5 may be used as the analog input channels to the A/D converter. The input buffers to P5 have Schmitt-Trigger characteristics in order to achieve logic levels from the analog inputs. Figure 10.14 illustrates the structure of a Port 5 pin.

Since Port 5 is an input only port, it has no port output latches and no direction register. However, an address in the bit addressable register address space is provided in order to be able to read Port 5 by software. Register P5 shows the format of the result when reading Port 5. Port 5 is actually a 10-bit port, but the port register P5 is realized as a word register. Positions P5.10 through P5.15 are reserved and will be read as zeros. A write operation to P5 has no effect. The value written to it is lost.

No special distinction has to be made between Port 5 lines being used as analog inputs and Port 5 lines being used as digital inputs. A read operation on Port 5 may be performed on any of the 10 bits. The bits corresponding to lines being used as analog inputs are don't care bits. An A/D conversion on a line being used as a digital input will convert the logic level applied to the pin. Table 10.3 illustrates the Port 5 lines and the corresponding analog input channels.

Figure 10-14. Block Diagram of a Port 5 Pin

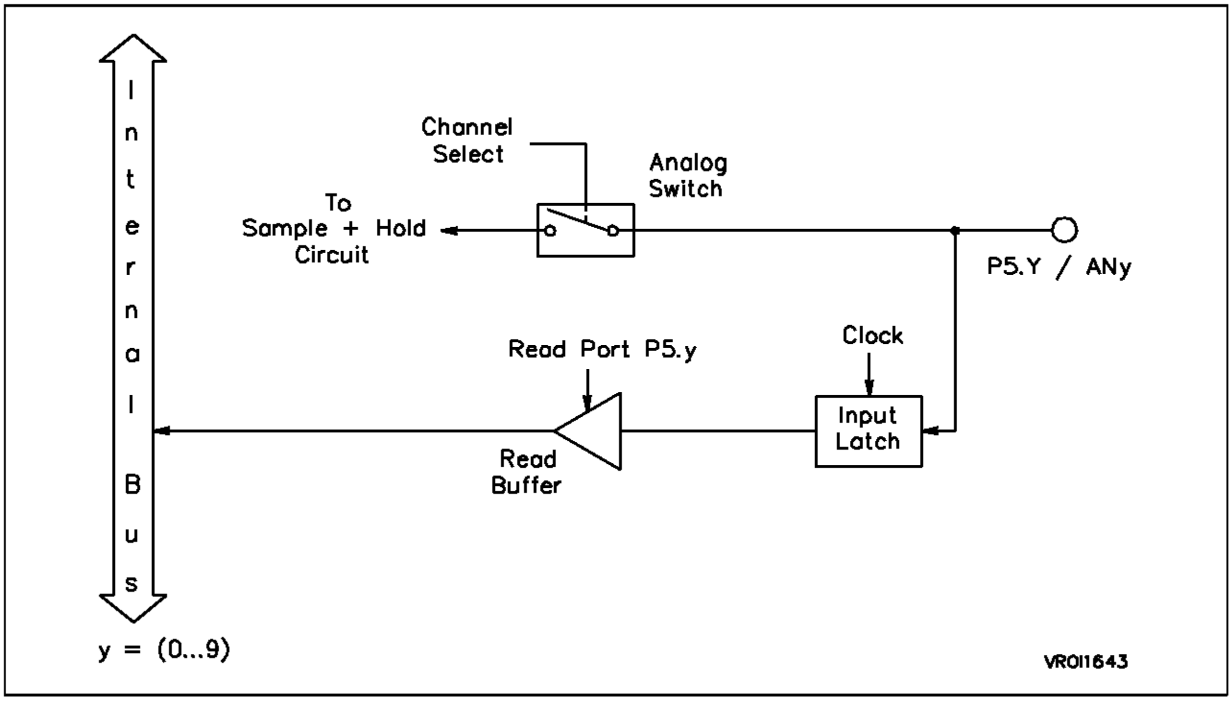

Table 10-3. Alternate Functions of Port 5

Symbol	Alternate Symbol	Description
P5.0	**AN0**	**Analog Input Channel 0**
P5.1	**AN1**	**Analog Input Channel 1**
P5.2	**AN2**	**Analog Input Channel 2**
P5.3	**AN3**	**Analog Input Channel 3**
P5.4	**AN4**	**Analog Input Channel 4**
P5.5	**AN5**	**Analog Input Channel 5**
P5.6	**AN5**	**Analog Input Channel 6**
P5.7	**AN7**	**Analog Input Channel 7**
P5.8	**AN8**	**Analog Input Channel 8**
P5.9	**AN9**	**Analog Input Channel 9**

P5 **(FFA2h / D1h)**
Port 5 Register P5
Reset Value: XXXXh

15	14	13	12	11	10	9	8
R						P5.9	P5.8

7	6	5	4	3	2	1	0
P5.7	PR.6	P5.5	P5.4	P5.3	P5.2	P5.1	P5.0

b15 to b10 =R: **Reserved.**

b9 to b0 =P5.y: **Port 5 Data Register.**
READ ONLY (y = 0 through 9).

NOTES :

SGS-THOMSON
MICROELECTRONICS

CHAPTER 11

SYSTEM RESET

11. SYSTEM RESET

The internal system reset function provides initialization of the ST10x166 into a defined default state. This internal reset function is invoked by any of the following conditions:

1) By asserting a hardware reset signal on the RSTIN (Hardware Reset Input) pin
2) Upon the execution of the SRST (Software Reset) instruction
3) By an overflow of the Watchdog Timer

Whenever one of these conditions occurs, the microcontroller is reset into its predefined default state through an internal reset procedure. When a reset is initiated, pending internal hold states are cancelled and external memory access cycles are aborted, regardless of an unreturned READY signal. Write operations to the internal RAM, however, are completed before the internal reset procedure begins. After this internal reset has been completed in case of a software or watchdog timer triggered reset, or after deassertion of the signal at pin RSTIN in case of a hardware reset, the microcontroller will start program execution from memory location 0000h in code segment zero. Here, one would normally place a branch instruction to the start of a software initialization routine for the application specific configuration of peripherals and CPU Special Function Registers.

11.1 RSTIN and RSTOUT Pins

Two pins, RSTIN (Reset In) and RSTOUT (Reset Out), are dedicated to the system reset function of the ST10x166. The RSTIN pin is used for resetting the microcontroller through an external hardware reset signal. To perform a complete reset sequence, the ST10x166 requires 1040 state times (52µs at 20MHz CPU clock) with RSTIN low.

In order to obtain an automatic power-on reset, the RSTIN pin can be connected to an external capacitor, since this pin already has an internal pullup resistor connected to VCC (see figure 11.1a). The reset signal on RSTIN first passes a Schmitt-Trigger in order to obtain a fast transition. For a power-on reset, the RSTIN pin has to be held low for the minimum duration of the start-up time of the oscillator (about 50ms for a quartz crystal). The internal pullup resistor may vary between 50k and 150kΩ therefore the minimum power-on reset time must be determined by the lowest value of this pullup resistor. One may also use an additional external resistor. In the reset circuit shown in figure 11.1b, reset source 1 may be used e.g for power-on reset, and reset source 2 for warm reset. In the case of a warm reset where the oscillator is already stabilized, the minimum low time of the reset signal at pin RSTIN is only 2 state times. Noise pulses longer than 2 state times will always initiate a complete reset of the ST10x166. Shorter pulses will not be considered by the ST10x166 and must be avoided. If RSTIN is still low by the time the internal reset sequence is completed, the sequence will start again. This procedure continues until a high level is found at the RSTIN pin at the end of a reset sequence.

The RSTOUT pin will be pulled low after a hardware reset signal has been asserted on the RSTIN pin. It is also pulled low whenever the SRST instruction is executed or a Watchdog Timer overflow has occurred. The signal on the RSTOUT pin can be used to simultaneously reset external hardware whenever the ST10x166 is reset. The RSTOUT pin stays low until the protected EINIT (End of Initialization) instruction is executed. Figure 11.2 shows the relation between the RSTIN and the RSTOUT signal.

Figure 11-1. Reset Circuits

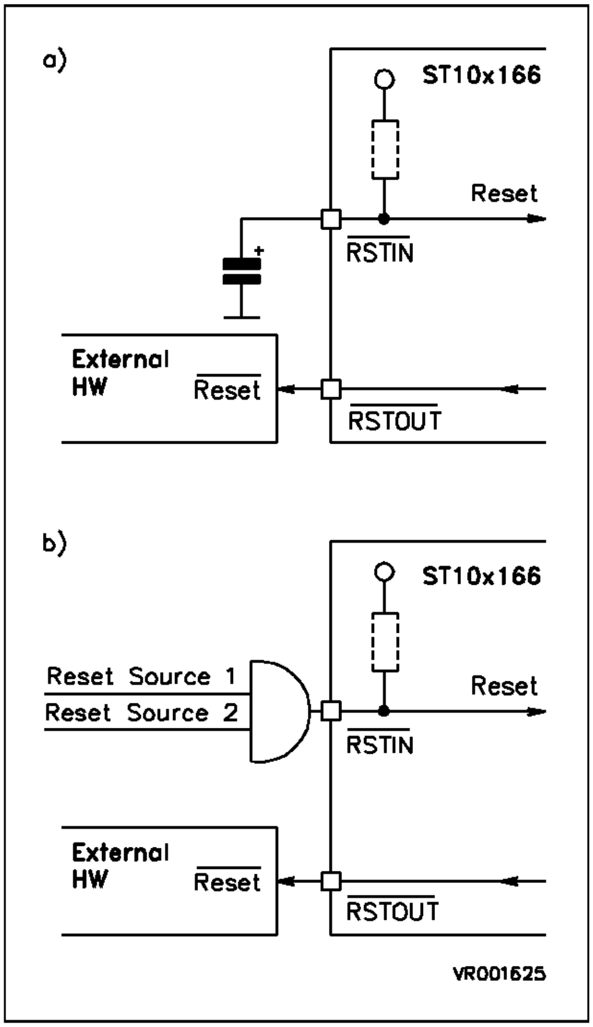
a)
ST10x166
Reset
RSTIN
+
External
HW
Reset
RSTOUT
b)
ST10x166
Reset Source 1
Reset Source 2
Reset
RSTIN
External
HW
Reset
RSTOUT
VR001625

11.2 RESET VALUES FOR ST10x166 REGISTERS

Most SFRs, including system registers and peripheral control and data registers, are forced to zero once the internal reset has completed. This default configuration has been selected such that all peripherals and the interrupt system are disabled from operation. Only data page pointers DPP1 through DPP3, the CP, SP, STKOV, STKUN, SYSCON, WDTCON, and specific read only registers may contain default values other than zero after a system reset. A complete summary of all ST10x166 registers and their reset values is contained in Appendix B.

Note that the contents of the internal RAM are not affected by a system reset. After a power-on reset, the contents of the internal RAM are undefined. This implies that the GPRs and the PEC source and destination pointers (SRCPy, DSTPy, y = 0..7) which are mapped into the internal RAM are also undefined after a power-on reset. After a warm reset or a reset which is caused by an overflow of the Watchdog Timer or by execution of the SRST instruction, the previous contents of the internal RAM remain unaffected.

The four Data Page Pointers DPP0 through DPP4 are initialized during a system reset such that they are pointing to the lowest four consecutive 16 K data pages. DPP0 points to data page 0, DPP1 points to data page 1, DPP2 points to data page 2, and DPP3 points to data page 3.

Figure 11-2. Reset Function

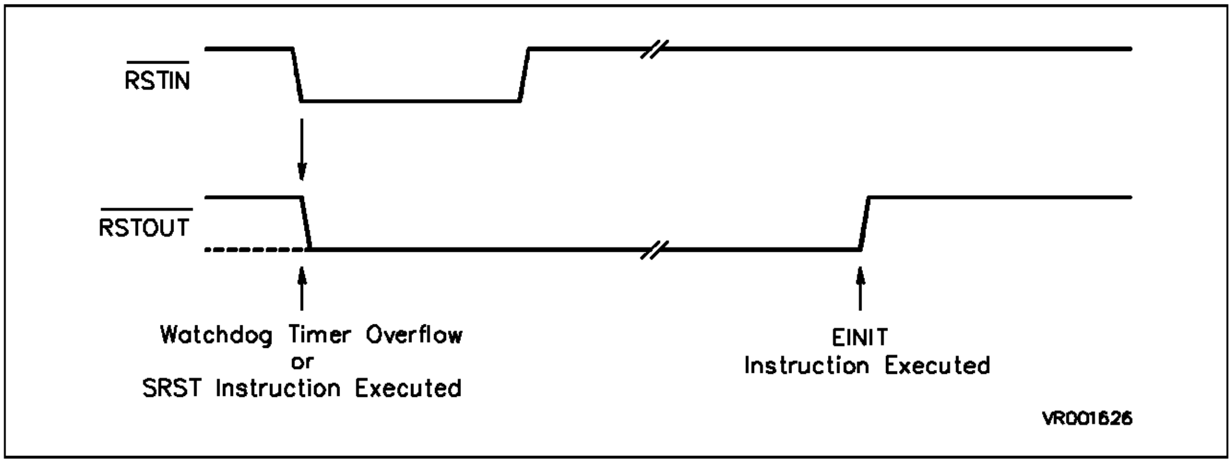
RSTIN
RSTOUT
Watchdog Timer Overflow
or
SRST Instruction Executed
EINIT
Instruction Executed
VR001626

11.3 WATCHDOG TIMER OPERATION AFTER RESET

The Watchdog Timer starts running after the internal reset has completed. Its default clock frequency will be the internal system clock/2 (10MHz at f_{OSC} = 40MHz), and its default reload value is 00h such that a watchdog timer overflow will occur 131072 states (6.55ms at f_{OSC} = 40MHz) after completion of the internal reset. When the system reset was caused by a Watchdog Timer overflow, the WDTR (Watchdog Timer Reset Indication) flag in register WDTCON will be set to '1'. This indicates the cause of the internal reset to the software initialization routine. WDTR is reset to '0' by an external hardware reset or by servicing the watchdog timer.

After the internal reset has completed, the operation of the Watchdog Timer can be disabled by the DISWDT (Disable Watchdog Timer) instruction. This instruction has been implemented as a protected instruction. For further security, its execution is only enabled in the time period after a reset until either the SRVWDT (Service Watchdog Timer) or the EINIT instruction has occurred. Otherwise, execution of the DISWDT instruction will have no effect. More details about Watchdog Timer operation can be found in section 8.5.

11.4 PORTS AND EXTERNAL BUS CONFIGURATION DURING RESET

During the internal reset, all of the ST10x166's port pins are configured as inputs through their direction registers and are switched to the high impedance state (see chapter 10 for details about the internal port structure). This ensures that the ST10x166 and external devices will not try to drive the same pin to different levels. Pin ALE floats to a low state through a weak internal pulldown, and pin $\overline{\text{RD}}$ floats to high.

The BTYP (Bus Type) field of the SYSCON register is initialized to the bus configuration that is determined by the state of pins $\overline{\text{BUSACT}}$, EBC0 and EBC1 (External Bus Configuration) at the end of the internal system reset. The Bus Active bit (BUSACT) will be cleared to '0' if single-chip mode has been selected ($\overline{\text{BUSACT}}$ = '1', EBC1/0= 00b), otherwise it is set to '1'. The other bits of the SYSCON register are forced to zero. This default initialization of the SYSCON register has been selected such that external memories are accessed with the slowest possible configuration for the respective bus type. The Ready function is disabled.

When the internal reset has completed, the configuration of Ports 0, 1, 4, and of the $\overline{\text{BHE}}$ signal (High Byte Enable, alternate function of P3.12) depends on the bus type which was selected during reset via the $\overline{\text{BUSACT}}$, EBC0 and EBC1 pins. All other pins remain in the high-impedance state until they are changed by software or peripheral operation.

When single chip mode was selected, Ports 0, 1, and 4, and P3.12/$\overline{\text{BHE}}$ also remain in the high-impedance state until modified by software or through bus type reconfiguration in register SYSCON.

When any of the external bus modes was selected during reset, Port 0 and/or Port 1 will operate in the selected bus mode. The two pins of Port 4 will output the segment address, since bit SGTDIS in register SYSCON is '0' (default after reset). The code segment pointer (CSP) is initialized to zero, and all bits of the data page pointers except for the two LSBs are also initialized to zero during reset. Therefore, Port 4 will always output 00b after reset. When no memory accesses above 64K are to be performed, segmentation may be globally disabled by setting bit SGTDIS to '1'.

When an external 16-bit data bus mode (16/18-bit address, multiplexed or non-multiplexed) is selected, the $\overline{\text{BHE}}$ pin will be active after a reset. It can be disabled by setting the BYTDIS bit in the SYSCON register to '1'.

11.5 INITIALIZATION SOFTWARE ROUTINE

To ensure proper entry into the initialization software routine, a hardware branch to location zero/segment zero is made immediately following completion of the internal system reset or deassertion of a correct reset signal on pin RSTIN, respectively. Since location 0000h is the first vector in the trap/interrupt vector table, it is the responsibility of the user to place a branch instruction at location zero which branches to the first instruction of the initialization routine. Note that 8 bytes (locations 0000h through 0007h) are provided in this table for the reset function. If single chip mode is selected through pins BUSACT, EBC1 and EBC0, the internal ROM for the ST10166 or the internal Flash memory for the ST10F166, is accessed when the initial branch is made to location zero. Otherwise, an external fetch to location zero is made.

After reset, the ROM access or the bus configuration can be modified in the first instruction of the software initialization routine. This is normally required whenever an external memory is used, because the SYSCON register is initialized during reset to the slowest possible memory configuration. To select the desired memory configuration and the required access parameters, one simply moves a constant to the SYSCON register thus ensuring that proper synchronization between the external memory and the ST10x166 is achieved. The external bus configuration options are described in detail in section 9.1.

To decrease the number of instructions required to initialize the ST10x166, each peripheral is programmed to a default configuration upon reset, but is disabled from operation. These default configurations can be found in the descriptions of the individual peripherals in chapter 8.

During the software design phase, portions of the internal memory space must be assigned to register banks and system stack. When selecting initialization values for the SP (Stack Pointer) and CP (Context Pointer) registers, one must ensure that these registers are initialized before any GPR or stack operation is performed. This includes interrupt processing which is disabled upon completion of the internal reset, and should remain disabled until the SP is initialized.

In addition, the stack overflow (STKOV) and the stack underflow (STKUN) registers should be initialized. After reset, the CP, SP, and STKUN registers all contain the same reset value FC00h, while the STKOV register contains FA00h. With the default reset initialization, 256 words of system stack are available, where the system stack selected by the SP grows downwards from FBFEh, while the register bank selected by the CP grows upwards from FC00h.

Based on the application, the user may wish to initialize portions of the internal memory before normal program operation. Once the register bank has been selected through programming of the CP register, one can easily perform memory zeroing through indirect addressing of the desired portions of the internal memory.

At the end of the initialization, the interrupt system may be globally enabled by moving the appropriate constant to the PSW register. One must be careful not to enable the interrupt system before initialization is complete.

The software initialization routine should be terminated with the EINIT instruction. This instruction has been implemented as a protected instruction. Execution of the EINIT instruction disables the action of the DISWDT instruction and causes the RSTOUT pin to go high (see also figure 11.2). This signal can be used to indicate the end of the initialization routine and the proper operation of the microcontroller to external hardware.

11.6 THE BOOT-STRAP MODE

On the ST10F166, 256Bytes of ROM (electrically programmable) are free to store the Boot-Strap Routine. This routine defined by the user, allows to pass round the immediate branch at the address 0000h in single chip mode.

This program has to be loaded with the Flash Programming Board provided by SGS-THOMSON Microelectronics.

To access this mode, ALE pin must be pulled high during a hardware reset (RSTIN).

This feature is optional, and if no program is stored in this area, a software reset instruction (SRST) will select the address 0000h in the program memory.

SGS-THOMSON
MICROELECTRONICS

CHAPTER 12

POWER REDUCTION MODES

12. POWER REDUCTION MODES

Two different power reduction modes with different levels of power reduction have been implemented in the ST10x166 which may be entered under software control. In Idle mode, the CPU is stopped, while the peripherals continue their operation. In Power Down mode, both the CPU and the peripherals are stopped. Idle mode can be terminated by any reset or interrupt request, while Power Down mode can only be terminated by a hardware reset.

12.1 POWER DOWN MODE

To save power in a system, the microcontroller can be placed in Power Down mode. All clocking of internal blocks is stopped, but the contents of the internal RAM are preserved through the voltage supplied by the VCC pins. The Watchdog Timer is stopped in Power Down mode. One can only exit this mode through an external hardware reset by asserting a low level on the $\overline{\text{RSTIN}}$ pin for a specified period of time (at least 2 state times). This reset will initialize all SFRs and ports to their default state, but will not change the contents of the internal RAM.

There are two levels of protection against unintentionally entering the Power Down mode. First, the PWRDN (Power Down) instruction which is used to enter this mode has been implemented as a protected instruction. Second, this instruction is effective ONLY if the $\overline{\text{NMI}}$ (Non Maskable Interrupt) pin is externally pulled low while the PWRDN instruction is executed. The microcontroller will then enter the Power Down mode after the PWRDN instruction has completed.

This feature can be used in conjunction with an external power failure signal, which pulls the $\overline{\text{NMI}}$ pin low when a power failure is imminent. The microcontroller will enter the NMI trap routine which can perform saving of the internal state into RAM. After the internal state has been saved, the trap routine may set a flag or write a certain bit pattern into specific RAM locations, and then execute the PWRDN instruction. If the $\overline{\text{NMI}}$ pin is still low at this time, the Power Down mode will be entered, otherwise program execution continues. During power down, the voltage at the VCC pins can be lowered to 2.5V and the contents of the internal RAM will be preserved.

Later, when a reset occurs, the initialization routine can check the identification flag or bit pattern in RAM to determine whether the controller was initially switched on or whether it was properly restarted from Power Down mode.

12.2 IDLE MODE

One can decrease the power consumption of the ST10x166 microcontroller by entering Idle mode. If enabled, all peripherals, INCLUDING the Watchdog Timer, continue to function normally, only the CPU operation is halted.

The Idle mode is entered after the IDLE instruction has been executed and the instruction before the IDLE instruction has completed. To prevent unintentional entry into Idle mode, the IDLE instruction has been implemented as a protected instruction.

The Idle mode is terminated by interrupt requests from any enabled interrupt source whose individual Interrupt Enable flag was set before the Idle mode was entered.

For a request which was selected for CPU interrupt service, the associated interrupt service routine is entered if the priority level of the requesting source is higher than the current CPU priority and the interrupt system is globally enabled. After the RETI (Return from Interrupt) instruction of the interrupt service routine is executed, the CPU continues normal program execution with the instruction following the IDLE instruction. Otherwise, if the interrupt request can not be serviced because of a too low priority or a globally disabled interrupt system, the CPU immediately resumes normal program execution with the instruction following the IDLE instruction.

For a request which was programmed for PEC service, a PEC data transfer is performed if the priority level of this request is higher than the current CPU priority and the interrupt system is globally enabled. After the PEC data transfer has been completed, the CPU returns into Idle mode. Otherwise, if the PEC request can not be serviced because of a too low priority or a globally disabled interrupt system, the CPU does not return to Idle mode but restarts normal program execution with the instruction following the IDLE instruction.

The Idle mode can also be terminated by a Non-Maskable Interrupt through a high to low transition on the $\overline{NMI}$ pin. After the Idle mode has been terminated by an interrupt or NMI request, the interrupt system performs a round of prioritization to determine the highest priority request. In the case of an NMI request, the NMI trap will always be entered.

Any interrupt request whose individual Interrupt Enable flag was set before the Idle mode was entered will terminate the Idle mode regardless of the current CPU priority. The CPU will NOT go back into Idle mode when a CPU interrupt request is detected, even when the interrupt was not serviced because of a higher CPU priority or a globaly disabled interrupt system (IEN = '0'). The CPU will ONLY go back into Idle mode when the interrupt system is globally enabled (IEN = '1') AND a PEC service on a priority level higher than the current CPU level is requested and executed.

The Watchdog Timer may be used for monitoring the Idle mode: an internal reset will be generated if no interrupt or NMI request occurs before the Watchdog Timer overflows. To prevent the Watchdog Timer from overflowing during Idle mode, it must be programmed to a reasonable time interval before the Idle mode is entered.

12.3 STATUS OF OUTPUT PINS DURING IDLE AND POWER DOWN MODE

During Idle mode, the CPU clocks are turned off, while all peripherals continue their operation in the normal way. Therefore, all ports pins which are configured as general purpose output pins output the last data value which was written to their port output latches. If the alternate output function of a port pin is used by a peripheral, the state of the pin is determined by the operation of the peripheral (Port 2, Port 3). In particular, if CLKOUT, the alternate output function of P3.15, has been enabled, it is also active during Idle mode.

Port pins which are used for bus control functions go into that state which represents the inactive state of the respective function ($\overline{WR}$), or to a defined state which is based on the last bus access ($\overline{BHE}$). Pins which are dedicated for bus control functions are also held in the inactive state (ALE, $\overline{RD}$). Port pins which are used as external address/data bus hold the address/data which was output during the last external memory access before entry into Idle mode under the following conditions:

- On P0[15:8], Port 0 outputs the high byte of the last transferred address if the 16/18 bit address, 8-bit data, multiplexed bus mode is used, otherwise all pins of Port 0 are floating. Pins P0[7:0] are always floating in Idle mode.
- Port 1 floats if the non-multiplexed bus mode is used, otherwise Port 1 acts as a general purpose I/O port.
- Port 4 outputs the segment address for the last access if segmentation is enabled, otherwise Port 4 acts as a general purpose I/O port.

During Power Down mode, the clocks to the CPU and to the peripherals are turned off. In the ST10x166, the oscillator is completely switched off. Like in Idle mode, all port pins which are configured as general purpose output pins output the last data value which was written to their port output latches.

When the alternate output function of a port pin is used by a peripheral, the state of this pin is determined by the last action of the peripheral before the clocks were switched off. In particular, if CLKOUT, the alternate output function of P3.15, had been enabled, it is not active during Power Down mode.

All external bus actions are completed before Idle or Power Down mode is entered. However, Idle or Power Down modes can NOT be entered if $\overline{\text{READY}}$ is enabled, but has not been deasserted during the last bus access.

The following table 12.1 presents a summary of the state of all ST10x166 output pins during Idle and Power Down modes.

Abbreviations used:

AF	**State determined by (last) activity of Alternate Output Function**
ADDR _ H	**Address High Byte**
DATA	**Data in Port Output Latch**
16/8	**16/18-bit Address, 8-bit Data, Multiplexed Bus**
16+16	**16/18-bit Address, 16-bit Data, Non-Multiplexed Bus**
non-segm	**Segmentation Disabled**

Table 12-1. Output Pins Status during Idle and Power Down Mode

Outputs	Idle Mode		Power Down Mode	
	No external bus enabled	External bus enabled	NO external bus enabled	External bus enabled
ALE	**L**	**L**	**L**	**L**
$\overline{\text{RD}}$	**H**	**H**	**H**	**H**
Port0				
7:0	**DATA**	**FLOAT**	**DATA**	**FLOAT**
15.8	**DATA**	**last ADDR_H (16/8)** **FLOAT otherwise**	**DATA**	**last ADDR_H (16/8)** **FLOAT otherwise**
Port1	**DATA**	**last ADDR (16 + 16)** **DATA otherwise**	**DATA**	**last ADDR (16 + 16)** **DATA otherwise**
Port2	**DATA/AF**	**DATA / AF**	**DATA/AF**	**DATA/last AF**
Port3	**DATA/AF**	**DATA / AF**	**DATA/AF**	**DATA/last AF**
$\overline{\text{BHE}}$/P3.12	**DATA**	**L or H**	**DATA**	**L or H**
$\overline{\text{WR}}$/P3.13	**DATA**	**H**	**DATA**	**H**
CLKOUT/P3.15 (if enabled)	**active**	**active**	**L**	**L**
Port4 A16, A17	**DATA**	**DATA (non-segm)** **last ADDR otherwise**	**DATA**	**DATA (non-segm)** **last ADDR otherwise**
$\overline{\text{RSTOUT}}$	**1)**	**1)**	**1)**	**1)**

1) Low if IDLE or PWRDN executed before EINIT, otherwise H

NOTES:

CHAPTER 13

SYSTEM PROGRAMMING

13. SYSTEM PROGRAMMING

To aid in software development, a number of features has been incorporated into the instruction set of the ST10x166. These include constructs for modularity, loops, and context switching. In many cases, commonly used instruction sequences have been simplified while providing greater flexibility. The following sections cover programming features and implementations to fully utilize this instruction set.

13.1 INSTRUCTIONS PROVIDED AS SUBSETS OF INSTRUCTIONS

In many cases, instructions found in other microcontrollers are provided as subsets of more powerful instructions in the ST10x166. This allows the same functionality to be provided while decreasing the hardware required and decreasing decode complexity. In order to aid assembly programming, these instructions, familiar from other microcontrollers, can be built in macros. The following subsections describe methods of providing the function of these common instructions.

13.1.1 Directly Substitutable Instructions

Instructions known from other microcontrollers can be replaced by the following instructions on the ST10x166 listed table 13.1

13.1.2 Modification of System Flags

All bit and word instructions can access the PSW register. Thus, to set or clear PSW flags, no CLEAR CARRY or ENABLE INTERRUPTS instruction is required. These functions are performed using bit set or clear (BSET, BCLR) instructions.

13.1.3 External Memory Data Access

By providing a Von-Neumann memory architecture and by providing hardware to detect access to internal RAM, GPRs, and SFRs, special instructions are not required to load data pointers or explicitly load and store external data. See chapter 6 for a detailed description of data addressing modes.

Table 13-1. Instruction Equivalents

Other µC		ST10x166		Function
CLR	**Rn**	**AND**	**Rn, #0h**	**Clear Register**
CPLB	**Bit**	**BMOVN**	**Bit, Bit**	**Complement Bit**
DEC	**Rn**	**SUB**	**Rn, #1h**	**Decrement Register**
INC	**Rn**	**ADD**	**Rn, #1h**	**Increment Register**
SWAPB	**Rn**	**ROR**	**Rn, #8h**	**Swap Bytes in Word**

13.2 MULTIPLICATION AND DIVISION

Multiplication and division of words and double words is provided through multiple cycle instructions implementing a Booth algorithm. Each instruction implicitly uses the 32-bit MD register (MDL-low 16 bits, MDH-high 16 bits). Whenever either half of this register is written into, the MDRIU flag (Multiply or Divide Register In Use) in the MDC register is set. It is cleared whenever the MDL register is read. Because an interrupt can be acknowledged before the MD register contents are saved, this flag is required to alert interrupt routines (which require the use of the multiply/divide hardware) of state preserved in the MD register. This register, however, must only be saved when an interrupt routine requires use of the MD register and a previous task has not saved the current result. This flag is easily tested by the Jump on Bit instructions.

Multiplication is simply performed by specifying the correct signed or unsigned version of the instruction. The result is then stored in the MD register. The overflow flag (V) is set if the result from a multiply or divide instruction is greater than 16 bits. This flag can then be used to determine whether both word halves of the MD register must be transferred from the MD register. One must first move the high portion of the MD register into the register file or memory to ensure that the MDRIU flag reflects the correct state.

The following instruction sequence performs an unsigned 16 by 16-bit multiplication:

```
SAVE:           JNB     MDRIU,START
;Test if MD was in use.
                SCXT    MDC, #0
;Save and clear control register
;(only required if multiply or ;di-
vide instruction was interrupted).
                BSET    SAVED
;Save indication of stored state.
                PUSH    MDH
;Save previous MD contents.
                PUSH    MDL
;on system stack.
```

Note: **The above save sequence and the restore sequence after COPYL are only required if the current routine could have interrupted a previous routine which contained a MUL or DIV instruction. The MDC register is also saved because it is possible that a previous routine's Multiply or Divide instruction was interrupted while in progress. In this case the information about how to restart the instruction is contained in this register. The MDC register must be cleared to be correctly initialized for a subsequent multiplication or division.**

```
START:          MULU    R1, R2
;Multiply       16x 16  unsigned,    Sets
;MDRIV.
                JNB     V, COPYL
;Test for only 16-bit result.
                MOV     R3, MDH
;Move high portion of MD.
COPYL:          MOV     R4, MDL
;Move low portion of MD, Clears
;MDRIV.
RESTORE:        JNB     SAVED, DONE
;Test if MD registers were saved.
                POP     MDL
;Restore registers.
                POP     MDH
                POP     MDC
DONE:
;any    instruction     .
```

To perform division, the user must first move the dividend into the MD register. If a 16/16 bit division is specified, only the low portion of the MD register must be loaded. The result is also stored in the MD register. The low portion of the MD register, MDL, contains the integer result of the division while the high portion of the MD register, MDH, contains the remainder.

The overflow flag V is set if the result can not be represented in a word data type. One must first copy the high portion of the MD register result into the register file or memory to ensure that the MDRIU flag is set correctly, but one may write to either half of the MD register to set the MDRIU flag. The following instruction sequence performs a 32 by 16 bit division:

```
                    MOV     MDH, R1
;Move dividend to  MD register,
;Sets MDRIV.
                    MOV     MDL, R2
;Move low portion to MD.
                    DIV     R3
;Divide 32/16 signed, R3 holds
;the divisor.
                    JB      V, ERROR
;Test for divide overflow.
                    MOV     R3, MDH
;Move remainder to R3.
                    MOV     R4, MDL
;Move integer result to R4,
;Clears MDRIV.
```

Whenever a multiply or divide instruction is interrupted while in progress, the MULIP flag in the PSW of the interrupting routine is set. When the interrupt routine is exited with the RETI instruction, this bit is implicitly tested before the old PSW is popped from the stack. If MULIP = '1', the interrupted multiply/divide instruction will then be completed after the RETI instruction has been executed.

Interrupt routines which require the use of the multiply/divide hardware MUST first push and then clear the MDC register before starting a multiply/divide operation if a multiply/ divide instruction was in progress in the interrupted routine (MULIP = '1'). The MDC register holds state of the interrupted multiply/divide instruction which is necessary in order to complete the instruction properly after the RETI instruction. The old MDC contents must be popped from the stack before the RETI instruction is executed.

13.3 BCD CALCULATIONS

No direct support for BCD calculations is provided in the ST10x166. BCD calculations are performed by converting between BCD data types and binary data types, performing the desired calculations using standard data types. Due to the enhanced performance of division instructions, one can quickly convert from binary to BCD through divisions by 10 of binary data types. Conversion from BCD to binary is enhanced by multiple bit shift instructions. Thus, similar performance is achieved in comparison to instructions which would support BCD data types while no additional hardware is required.

13.4 STACK OPERATIONS

Two types of stacks are provided in the ST10x166. The first type is used implicitly by the system and is contained in the internal RAM. The second type provides stack access to the user in either the internal or external memory. Both stack types grow from high memory addresses to low memory addresses and are described in the following subsections.

13.4.1 Internal System Stack

A system stack is provided to store return vectors, segment pointers, and processor status for procedures and interrupt routines. A system register, SP, points to the top of the stack. This pointer is decremented when data is pushed onto the stack and incremented when data is popped.

The internal system stack can also be used to temporarily store data between subroutines or tasks. Instructions are provided to push or pop registers on/from the system stack. However, in most cases the register banking scheme provides the best performance for saving state between multiple tasks.

Note: **THE SYSTEM STACK PERMITS STORAGE OF WORDS ONLY. Bytes can be stored on the system stack, but must be extended to words first. One must also consider that only even byte addresses can be stored in the SP register (LSB of SP is always '0').**

Detection of stack overflow/underflow is supported by two registers, STKOV (Stack Overflow Pointer) and STKUN (Stack Underflow Pointer). Specific system traps (Stack Overflow trap, Stack Underflow trap) will be entered whenever the SP reaches either boundary specified in these pointer registers.

The contents of the Stack Pointer are always compared to the contents of the Overflow register whenever the SP is DECREMENTED either by a Call, Push, or Subtract instruction. An Overflow Trap will be entered when the SP value is less than the value in the Stack Overflow register

The Stack Pointer value is compared to the contents of the Underflow register whenever the SP is INCREMENTED either by a Return, Pop, or Add instruction. An Underflow Trap will be entered when the SP value is greater than the value in the Stack Underflow register.

When a value is MOVED into the Stack Pointer, NO check against the Overflow/Underflow registers is performed.

13.4.1.1 USE OF STACK UNDERFLOW/OVERFLOW REGISTERS

In many cases, the user will place a Software Reset (SRST) instruction in the stack underflow and overflow trap service routines indicating a fatal error. However, it is also possible to use the stack underflow and stack overflow registers to cache portions of a larger external stack. This technique places only the portion of the system stack currently being used in the internal memory, thus allowing a greater portion of the internal RAM to be used for program data or register banking.

This basic technique allows data to be pushed until the overflow boundary of the internal stack is reached. At this point a portion of the stacked data must be saved in the external memory to create space for further stack pushes. This is called stack flushing. When executing a number of return or pop instructions, the upper boundary (since the stack empties upward to higher memory locations) is reached. The entries that have been previously saved on the external memory must now be restored. This is called stack filling. Because procedure call instructions do not continue to nest indefinitely and return instructions are interspersed with calls, flushing and filling normally occur very infrequently. If this is not true for a given program environment, this technique should not be used because of the overhead of flushing and filling.

To avoid movement of data that remains internally on the stack during flushing and filling, a circular stack mechanism has been implemented by masking off the higher bits of the stack pointer. Thus, only portions of the internal RAM that are flushed or filled need to be moved. Without this circular stacking, the user would have to move each entry that remained on the stack by the distance of the space being flushed or filled.

The circular stack technique requires that the internal stack be one of the following sizes: 32, 64, 128 or 256 words.

When a boundary is reached, the stack underflow or overflow trap is entered where the user moves a predetermined portion of the internal stack to or from the external stack. The amount of data transferred is determined by the average stack space required by routines and the frequency of calls, traps, interrupts, and returns. In most cases, this will be approximately one quarter to one tenth the size of the internal stack. Once the transfer is complete, the boundary pointers are updated to reflect the newly allocated space on the internal stack. Thus, the user is free to write code without concern for the internal stack limits. Only the execution time required by the trap routines is seen by user programs.

Because of circular stacking, data accessed at the boundary limits of the internal stack is accessed as if no boundary existed. When data is pushed beyond the bottom of the internal memory (location FA00h), the data actually is pushed at the top of the allocated stack space (e.g. location FBFEh where 256 words have been allocated for the stack). Thus, the internal access pointer wraps around the internal stack as specified by the stack size in the SYSCON register. The stack pointer always points to the virtual location in the external memory. The boundary pointers, STKOV and STKUN, also point to the external virtual stack locations.

The following procedure is required upon initialization of the controller:

1) **Specify in the SYSCON register the size of the internal RAM to be dedicated to the system stack.**
2) **Initialize two pointers in the internal data memory which specify the upper and lower boundary of the external stack. These values are then tested in the stack underflow and overflow trap routines.**
3) **Initialize the stack underflow pointer to the bottom of the external stack, and the overflow pointer to the value of the underflow pointer minus the size of the internal stack plus six words (for the reserved space).**

Following this procedure, the internal stack will fill until the overflow pointer is reached. After entry to the overflow trap procedure, the top of the stack will be copied out to the external RAM. The internal pointers will then be modified to reflect the newly allocated space. After exiting from the trap procedure, the internal stack will wrap around to the top of the internal stack, and continue to grow until the new value of the stack overflow pointer is reached.

13.4.2 User Stacks

User stacks provide the ability to create task specific data stacks and to off-load data from the system stack. The user may push both bytes and words onto a user stack, but is responsible for using the appropriate instructions when popping data from the specific user stack. No hardware detection of overflow or underflow of a user stack is provided. The following addressing modes allow implementation of user stacks:

Rb, [Rw+] or Rw, [Rw+]:

Post-increment Indirect Addressing: Used to pop one byte or word from a user stack. This mode is only available for MOV instructions, and can specify any GPR as the user stack pointer.

[-Rw], Rb or [-Rw], Rw:

Pre-decrement Indirect Addressing: Used to push one byte or word onto a user stack. This mode is only available for MOV instructions, and can specify any GPR as the user stack pointer.

Rb, [Rw+] or Rw, [Rw+]:

Post-increment Index Register Indirect Addressing: Used to pop one byte or word from a user stack. This mode is available to most instructions, but only GPRs R0-R3 can be specified as the user stack pointer.

13.5 REGISTER BANKING

Register banking provides the user with an extremely fast method of switching user context. A single machine cycle instruction saves the old bank and enters a new register bank. Each register bank may assign up to 16 registers. Each register bank should be allocated during coding based on the needs of each task. Once the internal memory has been partitioned into a register bank space, internal stack space, and a global internal memory area, each bank pointer is then assigned. Thus, upon entry to a new task, the appropriate bank pointer is used as the operand of the SCXT (switch context) instruction. Upon exit from a task, a simple POP instruction to the context pointer (CP) restores the previous task's register bank.

13.6 PROCEDURE CALL ENTRY AND EXIT

To support modular coding, a procedure mechanism is provided to allow coding of frequently used portions of code into subroutines. The CALL and RET instructions store and restore the value of the Instruction Pointer (IP) on the system stack before and after a subroutine is executed. One must also ensure that any data pushed onto the system stack during execution of the subroutine is popped before the RET instruction is executed.

13.6.1 Passing Parameters on the System Stack

Parameters may be passed on the system stack through PUSH instructions before the subroutine is called, and POP instructions during execution of the subroutine. Base plus offset indirect addressing also permits access to parameters without popping these parameters from the stack during execution of the subroutine. Indirect addressing provides a mechanism of accessing data referenced by data pointers which are passed to the subroutine.

In addition, two instructions have been implemented to allow one parameter to be passed on the system stack without additional software overhead.

The PCALL (push and call) instruction first pushes the 'reg' operand and the IP contents on the system stack and then passes control to the subroutine specified by the 'caddr' operand.

When exiting from the subroutine, the RETP (return and pop) instruction first pops the IP and then the 'reg' operand from the system stack and returns to the calling program.

13.6.2 Cross Segment Subroutine Calls

Calls to subroutines in different segments require use of the CALLS (call inter-segment subroutine) instruction. This instruction preserves both the CSP (code segment pointer) and IP on the system stack.

Upon return from the subroutine, a RETS (return from inter-segment subroutine) instruction must be used to restore both the CSP and IP. This ensures that the next instruction after the CALLS instruction is fetched from the correct segment. It is possible to use CALLS within the same segment, but two words of the stack are still used to store both the IP and CSP.

13.6.3

Providing Local Registers for Subroutines

For subroutines which require local storage, the following methods are provided:

- **Alternate Bank of Registers: Upon entry to a subroutine, it is possible to specify a new set of local registers by executing a SCXT (switch context) instruction. This mechanism does not provide a method to recursively call a subroutine.**
- **Saving and Restoring of Registers: To provide local registers, one can push the contents of the registers which are required for use by the subroutine, and pop the previous values before returning to the calling routine. This is the most common technique used today and it does provide a mechanism to support recursive procedures. This method, however, requires two machine cycles per register stored on the system stack (one cycle to PUSH the register, and one to POP the register).**

–

Use of the System Stack for Local Registers: It is possible to use the SP and CP to set up local subroutine register frames. This allows subroutines to dynamically allocate local variables as needed in two machine cycles. To allocate a local frame one simply subtracts the number of required local registers from the SP, and then moves the value of the new SP to the CP. This operation is supported through the SCXT (switch context) instruction with the addressing mode 'reg, mem'. Using this instruction one can save the old contents of the CP on the system stack and move the value of the SP into CP (see example in figure 13.1). Each local register is then accessed as if it was a normal register. Note that the system stack is growing downwards, while the register bank is growing upwards.

Upon exit from the subroutine, one first restores the old CP by popping it from the stack, and then simply adds the number of local registers used to the SP to restore the allocated local space back to the system stack.

Figure 13-1. Local Registers

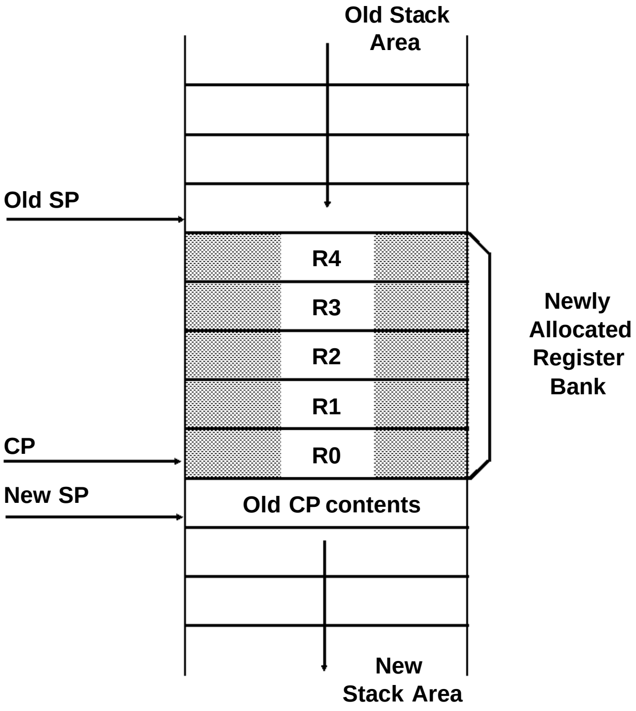

Example:

After subroutine entry:

```
SUB     SP, #10          ; 5 Words
SCXT   CP, SP
```

Before exiting subroutine:

```
POP    CP
ADD    SP, #10           ; 5 Words
```

13.7 TABLE SEARCHING

A number of features have been included to decrease the execution time required to search tables. First, branch delays are eliminated after the first iteration of the loop. Second, in non-sequentially searched tables, the enhanced performance of the ALU allows more complicated hash algorithms to be processed to obtain better table distribution. For sequentially searched tables, the auto-increment indirect addressing mode and the E (end of table) flag stored in the PSW decrease the number of overhead instructions executed in the loop. Below, two examples illustrate searching ordered tables and non-ordered tables, respectively:

```
                        MOV     R0, #BASE
;Move table base into R0.
LOOP:           CMP     R1, [R0+]
;Compare target to table entry.
                        JMPA    cc _ SGT, LOOP
;Test whether target has
;not been found.
```

Note: **The last entry in the table must be greater than the largest possible target.**

```
                        MOV     R0, #BASE
;Move table base into R0.
LOOP:           CMP     R1, [R0+]
;Compare target to table entry.
                        JMPA    cc _ NET, LOOP
;Test whether target is not
;found AND the end of table has not
;been reached.
```

Note: **The last entry in the table must be equal to the lowest signed integer (8000h).**

13.8 PERIPHERAL CONTROL AND INTERFACE

All communication between peripherals and the CPU is performed either by PEC transfers to and from the internal memory, or by explicitly addressing the SFRs associated with the specific peripherals. After resetting the ST10x166, all peripherals (except Watchdog Timer) are disabled and initialized to default values. To program a desired configuration of a specific peripheral, one uses MOV instructions of either constants or memory values to specific SFRs. One can also alter specific control flags through bit instructions.

Once in operation, the peripheral operates autonomously until an end condition is reached at which time it requests a PEC transfer or requests CPU servicing through an interrupt routine. One can also poll information from peripherals through read accesses of SFRs or bit operations including branch tests on specific control bits in SFRs. To ensure proper allocation of peripherals among multiple tasks, a portion of the internal memory has been made bit addressable to allow user semaphores. Instructions have also been provided to lock out tasks through software by setting or clearing of user specific bits and conditionally branching based on these specific bits.

It is recommended that fields of bits in control SFRs are updated using the BFLDH and BFLDL instructions to avoid undesired intermediate modes of operation which can occur when AND-OR instruction sequences are used.

13.9 FLOATING POINT SUPPORT

All floating point operations are performed using software. Standard multiple precision instructions are used to perform calculations on data types that exceed the size of the ALU. Multiple bit rotate and logic instructions allow easy masking and extracting of portions of floating point numbers.

To decrease the time required to perform floating point operations, two hardware features have been implemented in the core CPU. The first aids in normalizing floating point numbers by indicating the position of the first set bit in a GPR. One can then use this result to rotate the floating point result accordingly. The second feature aids in properly rounding the result of normalized floating point numbers through the overflow (V) flag in the PSW. This flag is set when a one is shifted out of the carry bit. The overflow flag and the carry flag are then used to round the floating point result based on the desired rounding algorithm.

13.10 TRAP/INTERRUPT ENTRY AND EXIT

Interrupt routines are entered when a requesting interrupt has a priority higher than the current CPU priority level. Traps are entered regardless of the current CPU priority. When either a trap or interrupt routine is entered, the state of the machine is preserved on the system stack and a branch to the appropriate trap/interrupt vector is made. This sequence is described in detail in chapter 7.

All trap and interrupt routines require use of the RETI (return from interrupt) instruction to exit from the called routine. This instruction restores the system state from the system stack and then branches to the location where the trap or interrupt occurred.

NOTES :

SGS-THOMSON MICROELECTRONICS

APPENDIX A

INSTRUCTION SET

A. ΙΝΣΤΡΥΧΤΙΟΝ ΣΕΤ

Section A.2 of the appendix of the ST10x166 User Manual contains a detailed description of the ST10x166 instructions in alphabetical order. Basic items of this descriptional part are defined in the following section A.1

A.1 Δεφινιτιονσ

This section defines and explains items which are mentioned in each single instruction description: Instruction name, syntax, operational description, data type, condition flags, addressing modes, formats and number of bytes.

A.1.1 Ινστρυχτιον Ναμε

Specifies the mnemonic opcode of the instruction in oversized bold lettering for easy reference. The mnemonics have been chosen with regard to the particular operation which is performed by the specified instruction.

A.1.2 Σψνταξ

Specifies the mnemonic opcode and the required formal operands of the instruction as used in the following subsection 'Operation'. There are instructions with either none, one, two or three operands which must be separated from each other by commas :

MNEMONIC {op1 {,op2 {,op3 } } }

The syntax for the actual operands of an instruction depends on the selected addressing mode. All of the addressing modes available are summarized at the end of each single instruction description. In contrast to the syntax for the instructions described in the following, the ST10x166 assembler provides much more flexibility in writing ST10x166 programs (e.g. by generic instructions and by automatically selecting appropriate addressing modes whenever possible), and thus it eases the use of the instruction set.

A.1.3 Οπερατιον / Δεσχριπτιον

This part presents a logical description of the operation performed by an instruction by means of a high level language construct. A brief verbal description of the operation of the instruction is additionally provided.

The following symbols are used to represent data movement, arithmetic or logical operators.

Διαδιχ οπερατιονσ:

	(οπΞ)		οπερατορ	(οπΨ)
←	(opY)	is	ΜΟςΕΔ into	(opX)
+	(opX)	is	ΑΔΔΕΔ to	(opY)
-	(opY)	is	ΣΥΒΤΡΑΧΤΕΔ from	(opX)
*	(opX)	is	ΜΥΛΤΙΠΛΙΕΔ by	(opY)
/	(opX)	is	ΔΙςΙΔΕΔ by	(opY)
∧	(opX)	is	logically ΑΝΔed with	(opY)
∨	(opX)	is	logically ΟΡ ed with	(opY)
⊕	(opX)	is	logically ΕΞΧΛΥΣΙςΕΛΨ ΟΡ ed with	(opY)
⇔	(opX)	is	ΧΟΜΠΑΡΕΔ against	(opY)
mod	(opX)	is	divided ΜΟΔΥΛΟ	(opY)

Μοναδιχ οπερατιονσ:

			οπερατορ	(οπΞ)
¬	(opX)	is	logically ΧΟΜΠΛΕΜΕΝΤΕΔ	

Missing or existing parentheses signify whether the used operand specifies an immediate constant value, an address or a pointer to an address as follows:

opX	Specifies the immediate constant value of opX
(opX)	Specifies the contents of opX
(opXn)	Specifies the contents of bit n of opX
((opX))	Specifies the contents of the contents of opX (this means that opX is used as pointer to the actual operand)

In addition to the formal operands op1, op2 and op3 which have already been introduced in subsection A.1.2 (Syntax), the following operands will be used in the operational description:

CP	Context Pointer register
CSP	Code Segment Pointer register
IP	Instruction Pointer
MD	Multiply/Divide register (32 bits wide, consists of MDH and MDL)
MDL, MDH	Multiply/Divide Low and High registers (each 16 bit wide)
PSW	Program Status Word register
SP	System Stack Pointer register
SYSCON	System Configuration register
C	Carry condition flag in the PSW register
V	Overflow condition flag in the PSW register
SGTDIS	Segmentation Disable bit in the SYSCON register
count	Temporary variable for an intermediate storage of the number of shift or rotate cycles which remain to complete the shift or rotate operation
tmp	Temporary variable for an intermediate result
0, 1, 2,...	Constant values due to the data format of the specified operation

A.1.4 Δατα Τψπεσ

This part specifies the particular data type according to the instruction. Basically, the following data types are possible:

BIT, BYTE, WORD, DOUBLE WORD

Except for those instructions which extend byte data to word data, all instructions have only one particular data type. Note that the data types mentioned in this subsection do not consider accesses to indirect address pointers or to the system stack which are always performed with word data. Moreover, no data type is specified for System Control Instructions and for those of the branch instructions which do not access any explicitly addressed data.

A.1.5 Χονδιτιον Φλαγσ

This part reflects the state of the N, C, V, Z and E flags in the PSW register which is the state after execution of the corresponding instruction except if the PSW register itself was specified as the destination operand of that instruction (see Note).

The resulting state of the flags is represented by symbols as follows:

‘*’ The flag is set due to the following standard rules for the corresponding flag:

N = 1 :	MSB of the result is set
N = 0 :	MSB of the result is not set
C = 1 :	Carry occured during operation
C = 0 :	No Carry occured during operation
V = 1 :	Arithmetic Overflow occured during operation
V = 0 :	No Arithmetic Overflow occured during operation
Z = 1 :	Result equals zero
Z = 0 :	Result does not equal zero
E = 1 :	Source operand represents the lowest negative number (either 8000h for word data or 80h for byte data)
E = 0 :	Source operand does not represent the lowest negative number for the specified data type
‘S’	The flag is set due to rules which deviate from the just described standard. For more details see section A.2 or the description of the ALU status flags in section 6.3.2.1
‘-’	The flag is not affected by the operation.
‘0’	The flag is cleared by the operation.
‘NOR’	The flag contains the logical NORing of the two specified bit operands.
‘AND’	The flag contains the logical ANDing of the two specified bit operands.
‘OR’	The flag contains the logical ORing of the two specified bit operands

'XOR'	The flag contains the logical XORing of the two specified bit operands.
'B'	The flag contains the original value of the specified bit operand.
'$\overline{B}$'	The flag contains the complemented value of the specified bit operand.

Νοτε :

If the PSW register was specified as the destination operand of an instruction, the condition flags can not be interpreted as just described, because the PSW register is modified depending on the data format of the instruction as follows:

For word operations, the PSW register is overwritten with the word result. For byte operations, the non-addressed byte is cleared and the addressed byte is overwritten. For bit or bit-field operations on the PSW register, only the specified bits are modified. Supposed that the condition flags were not selected as destination bits, they stay unchanged. This means that they keep the state after execution of the previous instruction.

In any case, if the PSW was the destination operand of an instruction, the PSW flags do NOT represent the condition flags of this instruction as usual.

A.1.6 Αδδρεσσινγ Μοδεσ

This part specifies which combinations of different addressing modes are available for the required operands. Mostly, the selected addressing mode combination is specified by the opcode of the corresponding instruction. However, there are some arithmetic and logical instructions where the addressing mode combination is not specified by the (identical) opcodes but by particular bits within the operand field.

The addressing modes are described in detail in section 6.2

Φιγυρε Α–1. Ινστρυχτιον Φορματ Ρεπρεσεντατιον

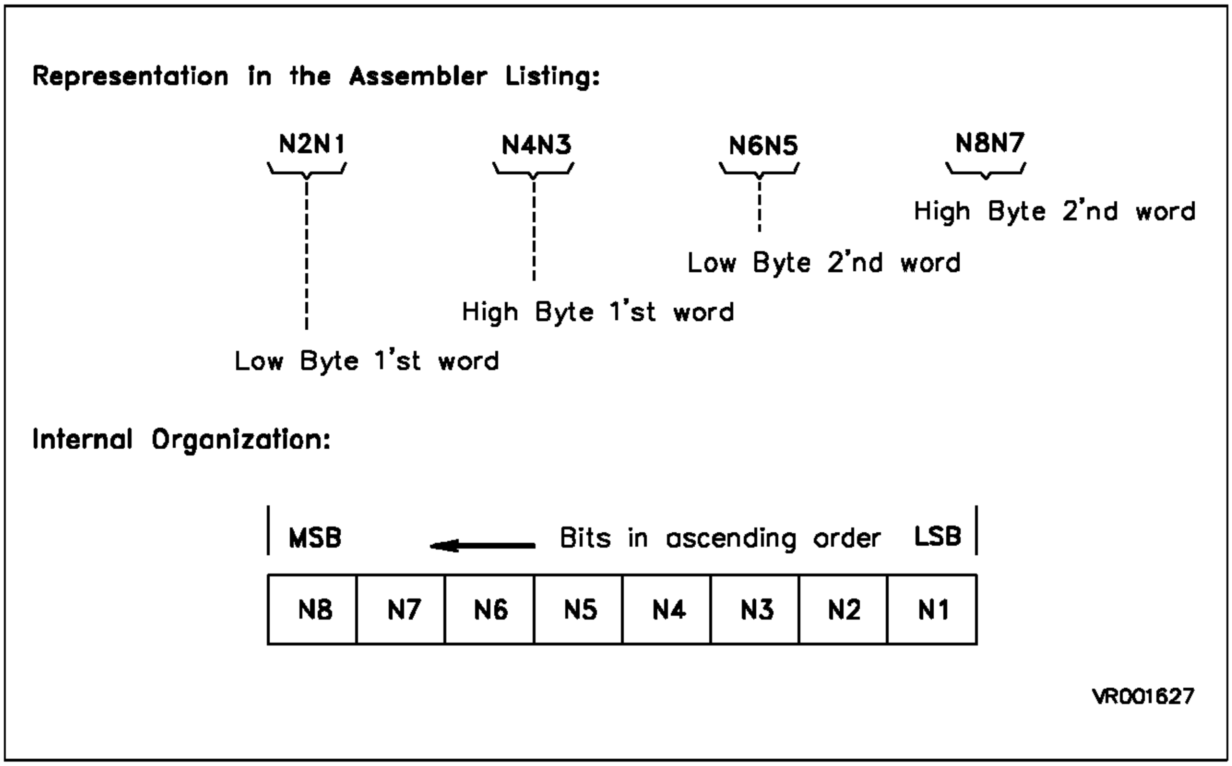
Representation in the Assembler Listing:
N2N1
N4N3
N6N5
N8N7
High Byte 2'nd word
Low Byte 2'nd word
High Byte 1'st word
Low Byte 1'st word
Internal Organization:
MSB
Bits in ascending order
LSB
N8
N7
N6
N5
N4
N3
N2
N1
VR001627

Α.1.7 Φορματ

This part specifies the format of the instructions as it is represented in the ASM166 assembler listing. Figure A.1 shows the reference between the instruction format representation of the assembler and the corresponding internal organization of such an instruction format (N = nibble = 4 bits).

Symbols are used as follows to describe the instruction formats:

00h through FFh : Instruction Opcodes

0, 1 : Constant Values

:.... : Each of the 4 characters immediately following a colon represents a single bit

:..ii : 2-bit short GPR address (Rwi)

:..ss : 2-bit code segment number (seg)

:.### : 3-bit immediate constant (#data3)

c : 4-bit condition code specification (cc)

n : 4-bit short GPR address (Rwn or Rbn)

m : 4-bit short GPR address (Rwm or Rbm)

q : 4-bit position of the source bit within the word specified by QQ

z : 4-bit position of the destination bit within the word specified by ZZ

# : 4-bit immediate constant (#data4)

QQ : 8-bit word address of the source bit (bitoff)

rr : 8-bit relative target address word offset (rel)

RR : 8-bit word address reg

ZZ : 8-bit word address of the destination bit (bitoff)

## : 8-bit immediate constant (#data8)

@@ : 8-bit immediate constant (#mask8)

MM MM : 16-bit address (mem or caddr; low byte, high byte)

: 16-bit immediate constant (#data16; low byte, high byte)

Α.1.8 Νυμβερ οφ Βψτεσ

Specifies the size of an instruction in bytes. All ST10x166 instructions consist of either 2 or 4 bytes. Regarding the instruction size, all instructions can be classified as either single word or double word instructions.

Α.2 ΣΙΝΓΛΕ ΙΝΣΤΡΥΧΤΙΟΝ ΔΕΣΧΡΙΠΤΙΟΝ

The following section contains a detailled description of each single instruction of the ST10x166 in alphabetical order.

ΑΔΔ ΑΔΔ

Ιντεγερ Αδδιτιον

ΑΔΔ οπ1, οπ2

OPERATION **(op1)⇐ (op1) + (op2)**

DATA TYPES **WORD**

Performs a 2’s complement binary addition of the source operand specified by op2 and the destination operand specified by op1. The sum is then stored in op1.

FLAGS

E	Z	V	C	N
*	*	*	*	*

E **Set if the value of op2 represents the lowest possible negative number. Cleared otherwise. Used to signal the end of a table.**

Z **Set if result equals zero. Cleared otherwise.**

V **Set if an arithmetic overflow occurred, i.e. the result can not be represented in the specified data type. Cleared otherwise.**

C **Set if a carry is generated from the most significant bit of the specified data type. Cleared otherwise.**

N **Set if the most significant bit of the result is set. Cleared otherwise.**

INSTRUCTION FORMAT

Μνεμονιχ	ΒΣΟ/Τασκινγ Μνεμονιχ	Οπερανδσ	Φορματ	Βψτεσ
ADD	**ADD**	**Rw_n,Rw_m**	**00 nm**	**2**
ADD	**ADD**	**Rw_n,[Rw_i]**	**08 n:10ii**	**2**
ADD	**ADD**	**Rw_n,[Rw_i+]**	**08 n:11ii**	**2**
ADD	**ADD**	**Rw_n,#$data_3$**	**08 n:0###**	**2**
ADD	**ADD**	**reg,#$data_{16}$**	**06 RR ## ##**	**4**
ADD	**ADD**	**reg,mem**	**02 RR MM MM**	**4**
ADD	**ADD**	**mem,reg**	**04 RR MM MM**	**4**

ΑΔΔΒ ΑΔΔΒ

Ιντεγερ Αδδιτιον

ΑΔΔΒ οπ1, οπ2

OPERATION (op1)⇐ (op1) + (op2)

DATA TYPES BYTE

Performs a 2's complement binary addition of the source operand specified by op2 and the destination operand specified by op1. The sum is then stored in op1.

FLAGS

E	Z	V	C	N
*	*	*	*	*

E	Set if the value of op2 represents the lowest possible negative number. Cleared otherwise. Used to signal the end of a table.
Z	Set if result equals zero. Cleared otherwise.
V	Set if an arithmetic overflow occurred, i.e. the result can not be represented in the specified data type. Cleared otherwise.
C	Set if a carry is generated from the most significant bit of the specified data type. Cleared otherwise.
N	Set if the most significant bit of the result is set. Cleared otherwise.

INSTRUCTION FORMAT

Μνεμονιχ	ΒΣΟ/Τασκινγ Μνεμονιχ	Οπερανδσ	Φορματ	Βψτεσ
ADDB	ADD	Rw$_n$,Rw$_m$	01 nm	2
ADDB	ADD	Rw$_n$,[Rw$_i$]	09 n:10ii	2
ADDB	ADD	Rw$_n$,[Rw$_i$+]	09 n:11ii	2
ADDB	ADD	Rw$_n$,#data$_3$	09 n:0###	2
ADDB	ADD	reg,#data$_{16}$	07 RR ## ##	4
ADDB	ADD	reg,mem	03 RR MM MM	4
ADDB	ADD	mem,reg	05 RR MM MM	4

ΑΔΔΧ ΑΔΔΧ

Ιντεγερ Αδδιτιον ωιτη Χαρρψ

ΑΔΔΧ οπ1, οπ2

OPERATION **(op1)⇐ (op1) + (op2) + (C)**

DATA TYPES **WORD**

Performs a 2’s complement binary addition of the source operand specified by op2, the destination operand specified by op1 and the previously generated carry bit. The sum is then stored in op1.

This instruction can be used to perform multiple precision arithmetic.

FLAGS

E	Z	V	C	N
*	S	*	*	*

E **Set if the value of op2 represents the lowest possible negative number. Cleared otherwise. Used to signal the end of a table.**

Z **Set if result equals zero and previous Z flag was set. Cleared otherwise.**

V **Set if an arithmetic overflow occurred, i.e. the result can not be represented in the specified data type. Cleared otherwise.**

C **Set if a carry is generated from the most significant bit of the specified data type. Cleared otherwise.**

N **Set if the most significant bit of the result is set. Cleared otherwise.**

INSTRUCTION FORMAT

Μνεμονιχ	ΒΣΟ/Τασκινγ Μνεμονιχ	Οπερανδσ	Φορματ	Βψτεσ
ADDC	**ADDC**	**Rw_n,Rw_m**	**10 nm**	**2**
ADDC	**ADDC**	**Rw_n,[Rw_i]**	**18 n:10ii**	**2**
ADDC	**ADDC**	**Rw_n,[Rw_i+]**	**18 n:11ii**	**2**
ADDC	**ADDC**	**Rw_n,#$data_3$**	**18 n:0###**	**2**
ADDC	**ADDC**	**reg,#$data_{16}$**	**16 RR ## ##**	**4**
ADDC	**ADDC**	**reg,mem**	**12 RR MM MM**	**4**
ADDC	**ADDC**	**mem,reg**	**12 RR MM MM**	**4**

ΑΔΔΧΒ ΑΔΔΧΒ

Ιντεγερ Αδδιτιον ωιτη Χαρρψ

ΑΔΔΧΒ οπ1, οπ2

OPERATION (op1)⇐ (op1) + (op2) + (C)

DATA TYPES BYTE

Performs a 2's complement binary addition of the source operand specified by op2, the destination operand specified by op1 and the previously generated carry bit. The sum is then stored in op1. This instruction can be used to perform multiple precision arithmetic.

FLAGS

E	Z	V	C	N
*	S	*	*	*

- E Set if the value of op2 represents the lowest possible negative number. Cleared otherwise. Used to signal the end of a table.
- Z Set if result equals zero and previous Z flag was set. Cleared otherwise.
- V Set if an arithmetic overflow occurred, i.e. the result can not be represented in the specified data type. Cleared otherwise.
- C Set if a carry is generated from the most significant bit of the specified data type. Cleared otherwise.
- N Set if the most significant bit of the result is set. Cleared otherwise.

INSTRUCTION FORMAT

Μνεμονιχ	ΒΣΟ/Τασκινγ Μνεμονιχ	Οπερανδσ	Φορματ	Βψτεσ
ADDCB	ADDC	$\mathrm{Rw}_n,\mathrm{Rw}_m$	11 nm	2
ADDCB	ADDC	$\mathrm{Rw}_n,[\mathrm{Rw}_i]$	19 n:10ii	2
ADDCB	ADDC	$\mathrm{Rw}_n,[\mathrm{Rw}_i+]$	19 n:11ii	2
ADDCB	ADDC	$\mathrm{Rw}_n,\#\mathrm{data}_3$	19 n:0###	2
ADDCB	ADDC	$\mathrm{reg},\#\mathrm{data}_{16}$	17 RR ## ##	4
ADDCB	ADDC	reg,mem	13 RR MM MM	4
ADDCB	ADDC	mem,reg	15 RR MM MM	4

ΑΝΔ ΑΝΔ

Λογιχαλ ΑΝΔ

ΑΝΔ οπ1, οπ2

OPERATION **(op1)⇐ (op1) ∧ (op2)**

DATA TYPES **WORD**

Performs a bitwise logical AND of the source operand specified by op2 and the destination operand specified by op1. The result is then stored in op1.

FLAGS

E	Z	V	C	N
*	*	0	0	*

E **Set if the value of op2 represents the lowest possible negative number. Cleared otherwise. Used to signal the end of a table.**

Z **Set if result equals zero. Cleared otherwise.**

V **Always cleared.**

C **Always cleared.**

N **Set if the most significant bit of the result is set. Cleared otherwise.**

INSTRUCTION FORMAT

Μνεμονιχ	ΒΣΟ/Τασκινγ Μνεμονιχ	Οπερανδσ	Φορματ	Βψτεσ
AND	**AND**	**Rw_n,Rw_m**	**60 nm**	**2**
AND	**AND**	**Rw_n,[Rw_i]**	**68 n:10ii**	**2**
AND	**AND**	**Rw_n,[Rw_i+]**	**68 n:11ii**	**2**
AND	**AND**	**Rw_n,#$data_3$**	**68 n:0###**	**2**
AND	**AND**	**reg,#$data_{16}$**	**66 RR ## ##**	**4**
AND	**AND**	**reg,mem**	**62 RR MM MM**	**4**
AND	**AND**	**mem,reg**	**64 RR MM MM**	**4**

ANΔB ANΔB

Λογιχαλ ANΔ

ANΔB οπ1, οπ2

OPERATION **(op1)⇐ (op1) ∧ (op2)**

DATA TYPES **BYTE**

Performs a bitwise logical AND of the source operand specified by op2 and the destination operand specified by op1. The result is then stored in op1.

FLAGS

E	Z	V	C	N
*	*	0	0	*

E	**Set if the value of op2 represents the lowest possible negative number. Cleared otherwise. Used to signal the end of a table.**
Z	**Set if result equals zero. Cleared otherwise.**
V	**Always cleared.**
C	**Always cleared.**
N	**Set if the most significant bit of the result is set. Cleared otherwise.**

INSTRUCTION FORMAT

Μνεμονιχ	BΣO/Τασκινγ Μνεμονιχ	Οπερανδσ	Φορματ	Βψτεσ
ANDB	**AND**	**Rw$_n$,Rw$_m$**	**61 nm**	**2**
ANDB	**AND**	**Rw$_n$,[Rw$_i$]**	**69 n:10ii**	**2**
ANDB	**AND**	**Rw$_n$,[Rw$_i$+]**	**69 n:11ii**	**2**
ANDB	**AND**	**Rw$_n$,#data$_3$**	**69 n:0###**	**2**
ANDB	**AND**	**reg,#data$_{16}$**	**67 RR ## ##**	**4**
ANDB	**AND**	**reg,mem**	**63 RR MM MM**	**4**
ANDB	**AND**	**mem,reg**	**65 RR MM MM**	**4**

ΑΣΗΡ ΑΣΗΡ

Αριτημετιχ Σηιφτ Ριγητ

ΑΣΗΡ οπ1, οπ2

OPERATION

```
(count) ⇐ (op2)

(V) ⇐ 0
(C) ⇐ 0
DO WHILE (count) ≠ 0
        (V) ⇐ (C) ∨ (V)
        (C) ⇐ $(op1_0)$
        $(op1_n)$ ⇐ $(op1_{n+1})$ n=0 to 14
        (count) ⇐ (count) - 1
END WHILE
```

DATA TYPES WORD

Arithmetically shifts the destination word operand op1 right by as many times as specified in the source operand op2. To preserve the sign of the original operand op1, the most significant bits of the result are filled with zeros if the original MSB was a 0 or with ones if the original MSB was a 1. The Overflow flag is used as a Rounding flag. The LSB is shifted into the Carry. Only shift values between 0 and 15 are allowed. When using a GPR as the count control, only the least significant 4 bits are used.

FLAGS

E	Z	V	C	N
0	*	S	S	*

E	Always cleared.
Z	Set if result equals zero. Cleared otherwise.
V	Set if in any cycle of the shift operation a 1 is shifted out of the Carry flag. Cleared for a shift count of zero.
C	The Carry flag is set according to the last LSB shifted out of op1. Cleared for a shift count of zero.
N	Set if the most significant bit of the result is set. Cleared otherwise.

INSTRUCTION FORMAT

Μνεμονιχ	ΒΣΟ/Τασκινγ Μνεμονιχ	Οπερανδσ	Φορματ	Βψτεσ
ASHR	ASHR	Rw_n,Rw_m	AC nm	2
ASHR	ASHR	Rw_n,#$data_4$	BC #n	2

ΒΑΝΔ ΒΑΝΔ

Βιτ Λογιχαλ ΑΝΔ

ΒΑΝΔ οπ1, οπ2

OPERATION (op1)⇐ (op1) ∧ (op2)

DATA TYPES BIT

Performs a single bit logical AND of the source bit specified by operand op2 with the destination bit specified by operand op1. The ANDed result is then stored in op1.

FLAGS

E	Z	V	C	N
0	NOR	OR	AND	XOR

E	Always cleared.
Z	Contains the logical NOR of the two specified bits.
V	Contains the logical OR of the two specified bits.
C	Contains the logical AND of the two specified bits.
N	Contains the logical XOR of the two specified bits.

INSTRUCTION FORMAT

Μνεμονιχ	ΒΣΟ/Τασκινγ Μνεμονιχ	Οπερανδσ	Φορματ	Βψτεσ
BAND	AND	bitaddr$_{Z.z}$,bitaddr$_{Q.q}$	6A QQ ZZ qz	4

ΒΧΛΡ ΒΧΛΡ

Βιτ Χλεαρ

ΒΧΛΡ οπ1

OPERATION **(op1)⇐ 0**

DATA TYPES **BIT**

Clears the bit specified in operand op1. This instruction is primarily used for peripheral and system control.

FLAGS

E	Z	V	C	N
0	$\overline{B}$	0	0	B

E **Always cleared.**
Z **Contains the logical negation of the previous state of the specified bit.**
V **Always cleared.**
C **Always cleared.**
N **Contains the previous state of the specified bit.**

INSTRUCTION FORMAT

Μνεμονιχ	ΒΣΟ/Τασκινγ Μνεμονιχ	Οπερανδσ	Φορματ	Βψτεσ
BCLR	**BCLR**	**bitaddr$_{Q.q}$**	**qE QQ**	**2**

ΒΧΜΠ ΒΧΜΠ

Βιτ το Βιτ Χομπαρε

ΒΧΜΠ οπ1, οπ2

OPERATION **(op1)⇔ (op2)**

DATA TYPES **BIT**

Performs a single bit comparison of the source bit specified by operand op1 to the source bit specified by operand op2. No result is written by this instruction. Only the condition codes are updated.

FLAGS

E	Z	V	C	N
0	NOR	OR	AND	XOR

E **Always cleared.**

Z **Contains the logical NOR of the two specified bits.**

V **Contains the logical OR of the two specified bits.**

C **Contains the logical AND of the two specified bits.**

N **Contains the logical XOR of the two specified bits.**

INSTRUCTION FORMAT

Μνεμονιχ	ΒΣΟ/Τασκινγ Μνεμονιχ	Οπερανδσ	Φορματ	Βψτεσ
BCMP	**CMP**	**bitaddr$_{Z.z}$, bitaddr$_{Q.q}$**	**2A QQ ZZ qz**	**4**

ΒΦΛΔΗ ΒΦΛΔΗ

Βιτ Φιελδ Ηιγη Βψτε

ΒΦΛΔΗ οπ1, οπ2, οπ3

OPERATION (tmp) ⇐ (op1)
(high byte (tmp)) ⇐ ((high byte (tmp) ∧ ¬ op2) ∨ op3)
(op1) ⇐ (tmp)

DATA TYPES WORD

Replaces those bits in the high byte of the destination word operand op1 which are selected by an ‘1’ in the AND mask op2 with the bits at the corresponding positions in the OR mask specified by op3.

Note: Bits which are masked off by a ‘0’ in the AND mask op2 may be unintentionally altered if the corresponding bit in the OR mask op3 contains a ‘1’.

FLAGS

E	Z	V	C	N
0	*	0	0	*

E	Always cleared.
Z	Set if the word result equals zero. Cleared otherwise.
V	Always cleared.
C	Always cleared.
N	Set if the most significant bit of the word result is set. Cleared otherwise.

INSTRUCTION FORMAT

Μνεμονιχ	ΒΣΟ/Τασκινγ Μνεμονιχ	Οπερανδσ	Φορματ	Βψτεσ
BFLDH	BFLDH	bitoff$_Q$, #mask$_8$, #data$_8$	1A QQ ## @@	4

ΒΦΛΔΛ ΒΦΛΔΛ

Βιτ Φιελδ Λοω Βψτε

ΒΦΛΔΛ οπ1, οπ2, οπ3

OPERATION $(tmp) \Leftarrow (op1)$
$(low\ byte\ (tmp)) \Leftarrow ((low\ byte\ (tmp) \wedge \neg\ op2) \vee op3)$
$(op1) \Leftarrow (tmp)$

DATA TYPES **WORD**

Replaces those bits in the low byte of the destination word operand op1 which are selected by an ‘1’ in the AND mask op2 with the bits at the corresponding positions in the OR mask specified by op3.

Note: Bits which are masked off by a ‘0’ in the AND mask op2 may be unintentionally altered if the corresponding bit in the OR mask op3 contains a ‘1’.

FLAGS

E	Z	V	C	N
0	*	0	0	*

E	**Always cleared.**
Z	**Set if the word result equals zero. Cleared otherwise.**
V	**Always cleared.**
C	**Always cleared.**
N	**Set if the most significant bit of the word result is set. Cleared otherwise.**

INSTRUCTION FORMAT

Μνεμονιχ	ΒΣΟ/Τασκινγ Μνεμονιχ	Οπερανδσ	Φορματ	Βψτεσ
BFLDL	**BFLDL**	**bitoff$_Q$, #mask$_8$, #data$_8$**	**0A QQ @@ ##**	**4**

BMOς BMOς

Βιτ το Βιτ Μοϖε

BMOς οπ1, οπ2

OPERATION **(op1)⇐ (op2)**

DATA TYPES **BIT**

Moves a single bit from the source operand specified by op2 into the destination operand specified by op1. The source bit is examined and the flags are updated accordingly.

FLAGS

E	Z	V	C	N
0	$\overline{B}$	0	0	B

E **Always cleared.**
Z **Contains the logical negation of the previous state of the source bit.**
V **Always cleared.**
C **Always cleared.**
N **Contains the previous state of the source bit.**

INSTRUCTION FORMAT

Μνεμονιχ	ΒΣΟ/Τασκινγ Μνεμονιχ	Οπερανδσ	Φορματ	Βψτεσ
BMOV	**MOV**	**bitaddr$_{Z.z}$, bitaddr$_{Q.q}$**	**4A QQ ZZ qz**	**4**

BMOςN BMOςN

Βιτ το Βιτ Μοϖε ανδ Νεγατε

BMOςN οπ1, οπ2

OPERATION **(op1)⇐ ¬ (op2)**

DATA TYPES **BIT**

Moves the complement of a single bit from the source operand specified by op2 into the destination operand specified by op1. The source bit is examined and the flags are updated accordingly.

FLAGS

E	Z	V	C	N
0	$\overline{B}$	0	0	B

- **E** **Always cleared.**
- **Z** **Contains the logical negation of the previous state of the source bit.**
- **V** **Always cleared.**
- **C** **Always cleared.**
- **N** **Contains the previous state of the source bit.**

INSTRUCTION FORMAT

Μνεμονιχ	ΒΣΟ/Τασκινγ Μνεμονιχ	Οπερανδσ	Φορματ	Βψτεσ
BMOVN	**BMOVN**	**bitaddr$_{Z.z}$, bitaddr$_{Q.q}$**	**3A QQ ZZ qz**	**4**

BOP BOP

Βιτ Λογιχαλ ΟΡ

BOP οπ1, οπ2

OPERATION (op1)⇐ (op1)∨ (op2)

DATA TYPES BIT

Performs a single bit logical OR of the source bit specified by operand op2 with the destination bit specified by operand op1. The ORed result is then stored in op1.

FLAGS

E	Z	V	C	N
0	NOR	OR	AND	XOR

E	Always cleared.
Z	Contains the logical NOR of the two specified bits.
V	Contains the logical OR of the two specified bits.
C	Contains the logical AND of the two specified bits.
N	Contains the logical XOR of the two specified bits.

INSTRUCTION FORMAT

Μνεμονιχ	ΒΣΟ/Τασκινγ Μνεμονιχ	Οπερανδσ	Φορματ	Βψτεσ
BOR	OR	bitaddr$_{Z.z}$, bitaddr$_{Q.q}$	5A QQ ZZ qz	4

ΒΣΕΤ ΒΣΕΤ

Βιτ Σετ

ΒΣΕΤ οπ1

OPERATION **(op1)⇐ 1**

DATA TYPES **BIT**

Sets the bit specified in operand op1. This instruction is primarily used for peripheral and system control.

FLAGS

E	Z	V	C	N
0	$\overline{B}$	0	0	B

E	**Always cleared**
Z	**Contains the logical negation of the previous state of the specified bit.**
V	**Always cleared.**
C	**Always cleared.**
N	**Contains the previous state of the specified bit.**

INSTRUCTION FORMAT

Μνεμονιχ	ΒΣΟ/Τασκινγ Μνεμονιχ	Οπερανδσ	Φορματ	Βψτεσ
BSET	**BSET**	**bitaddr$_{Q.q}$**	**qF QQ**	**2**

ΒΞΟΡ

ΒΞΟΡ

Βιτ Λογιχαλ ΞΟΡ

ΒΞΟΡ οπ1, οπ2

OPERATION (op1)⇐ (op1)⊕ (op2)

DATA TYPES BIT

Performs a single bit logical EXCLUSIVE OR of the source bit specified by operand op2 with the destination bit specified by operand op1. The XORed result is then stored in op1.

FLAGS

E	Z	V	C	N
0	NOR	OR	AND	XOR

E	Always cleared.
Z	Contains the logical NOR of the two specified bits.
V	Contains the logical OR of the two specified bits.
C	Contains the logical AND of the two specified bits.
N	Contains the logical XOR of the two specified bits.

INSTRUCTION FORMAT

Μνεμονιχ	ΒΣΟ/Τασκινγ Μνεμονιχ	Οπερανδσ	Φορματ	Βψτεσ
BXOR	XOR	bitaddr$_{Z.z}$, bitaddr$_{Q.q}$	7A QQ ZZ qz	4

ΧΑΛΛΑ

ΧΑΛΛΑ

Χαλλ Συβρουτινε Αβσολυτε

ΧΑΛΛΑ οπ1, οπ2

OPERATION

```
IF (op1) THEN
        (SP) ⇐ (SP) - 2
        ((SP)) ⇐ (IP)
        (IP) ⇐ op2
ELSE
        next instruction
END IF
```

If the condition specified by op1 is met, a branch to the absolute memory location specified by the second operand op2 is taken. The value of the instruction pointer, IP, is placed onto the system stack. Because the IP always points to the instruction following the branch instruction, the value stored on the system stack represents the return address of the calling routine. If the condition is not met, no action is taken and the next instruction is executed normally.

CONDITION CODES See Table A.1.

FLAGS

E	Z	V	C	N
-	-	-	-	-

-

E Not affected.
Z Not affected.
V Not affected.
C Not affected.
N Not affected.

INSTRUCTION FORMAT

Μνεμονιχ	ΒΣΟ/Τασκινγ Μνεμονιχ	Οπερανδσ	Φορματ	Βψτεσ
CALLA	CALL	cc,caddr	CA c0 MM MM	4

Χονδιτιον Χοδεσ

Α–1. Χονδιτιον Χοδε Τεστσ φορ Βρανχη ανδ Χαλλ Ινστρυχτιονσ

Χονδιτιον Χοδε Μνεμονιχσ χχ	Τεστ	Δεσχριπτιον	Χονδιτιον Χοδε Νυμβερ χ
cc_UC	**1 = 1**	**Unconditional**	**0h**
cc_Z	**Z = 1**	**Zero**	**2h**
cc_NZ	**Z = 0**	**Not zero**	**3h**
cc_V	**V = 1**	**Overflow**	**4h**
cc_NV	**V = 0**	**No overflow**	**5h**
cc_N	**N = 1**	**Negative**	**6h**
cc_NN	**N = 0**	**Not negative**	**7h**
cc_C	**C = 1**	**Carry**	**8h**
cc_NC	**C = 0**	**No carry**	**9h**
cc_EQ	**Z = 1**	**Equal**	**2h**
cc_NE	**Z = 0**	**Not equal**	**3h**
cc_ULT	**C = 1**	**Unsigned less than**	**8h**
cc_ULE	**(Z∨C) = 1**	**Unsigned less than or equal**	**Fh**
cc_UGE	**C = 0**	**Unsigned greater than or equal**	**9h**
cc_UGT	**(Z∨C) = 0**	**Unsigned greater than**	**Eh**
cc_SLT	**(N⊕V) = 1**	**Signed less than**	**Ch**
cc_SLE	**(Z∨(N⊕V)) = 1**	**Signed less than or equal**	**Bh**
cc_SGE	**(N⊕V) = 0**	**Signed greater than or equal**	**Dh**
cc_SGT	**(Z∨(N⊕V)) = 0**	**Signed greater than**	**Ah**
cc_NET	**(Z∨E) = 0**	**Not equal AND not end of table**	**1h**

ΧΑΛΛΙ ΧΑΛΛΙ

Χαλλ Συβρουτινε Ινδιρεχτ

CALLI **op1, op2**

OPERATION

```
IF (op1) THEN
        (SP) ⇐ (SP) - 2
        ((SP)) ⇐ (IP)
        (IP) ⇐ (op2)
ELSE
        next instruction
END IF
```

If the condition specified by op1 is met, a branch to the location specified indirectly by the second operand, op2, is taken. The value of the instruction pointer, IP, is placed onto the system stack. Because the IP always points to the instruction following the branch instruction, the value stored on the system stack represents the return address of the calling routine. If the condition is not met, no action is taken and the next instruction is executed normally.

Condition Codes

See Table A.1.

FLAGS

E	Z	V	C	N
-	-	-	-	-

-

E	Not affected.
Z	Not affected.
V	Not affected.
C	Not affected.
N	Not affected.

INSTRUCTION FORMAT

Μνεμονιχ	ΒΣΟ/Τασκινγ Μνεμονιχ	Οπερανδσ	Φορματ	Βψτεσ
CALLI	CALL	cc,[Rwn]	AB cn	2

ΧΑΛΛΡ ΧΑΛΛΡ

Χαλλ Συβρουτινε Ρελατιϖε

ΧΑΛΛΡ οπ1

OPERATION (SP) ⇐ (SP) - 2
((SP)) ⇐ (IP)
(IP) ⇐ (IP) + sign_extend (op1)

A branch is taken to the location specified by the instruction pointer, IP, plus the relative displacement, op1. The displacement is a two's complement number which is sign extended and counts the relative distance in words. The value of the instruction pointer (IP) is placed onto the system stack. Because the IP always points to the instruction following the branch instruction, the value stored on the system stack represents the return address of the calling routine. The value of the IP used in the target address calculation is the address of the instruction following the CALLR instruction.

FLAGS

E	Z	V	C	N
-	-	-	-	-

E Not affected.
Z Not affected.
V Not affected.
C Not affected.
N Not affected.

INSTRUCTION FORMAT

Μνεμονιχ	ΒΣΟ/Τασκινγ Μνεμονιχ	Οπερανδσ	Φορματ	Βψτεσ
CALLR	CALL	rel	BB rr	2

ΧΑΛΛΣ ΧΑΛΛΣ

Χαλλ Ιντερ–σεγμεντ Συβρουτινε

ΧΑΛΛΣ οπ1, οπ2

OPERATION

(SP) ⇐ (SP) - 2
((SP)) ⇐ (CSP)
(SP) ⇐ (SP) - 2
((SP)) ⇐ (IP)
(CSP) ⇐ op1
(IP) ⇐ op2

A branch is taken to the absolute location specified by op2 within the segment specified by op1. The value of the instruction pointer (IP) is placed onto the system stack. Because the IP always points to the instruction following the branch instruction, the value stored on the system stack represents the return address to the calling routine. The previous value of the CSP is also placed on the system stack to insure correct return to the calling segment.

FLAGS

E	Z	V	C	N
-	-	-	-	-

C	**Not affected.**
N	**Not affected.**
V	**Not affected.**
Z	**Not affected.**
E	**Not affected.**

INSTRUCTION FORMAT

Μνεμονιχ	ΒΣΟ/Τασκινγ Μνεμονιχ	Οπερανδσ	Φορματ	Βψτεσ
CALLS	**CALL**	**seg,caddr**	**DA 0:00ss MM MM**	**4**

ΧΜΠ ΧΜΠ

Ιντεγερ Χομπαρε

ΧΜΠ οπ1, οπ2

OPERATION **(op1)⇔ (op2)**

DATA TYPES **WORD**

The source operand specified by op1 is compared to the source operand specified by op2 by performing a 2's complement binary subtraction of op2 from op1. The flags are set according to the rules of subtraction. The operands remain unchanged.

FLAGS

E	Z	V	C	N
*	*	*	S	*

E Set if the value of op2 represents the lowest possible negative number. Cleared otherwise. Used to signal the end of a table.

Z Set if the result equals zero. Cleared otherwise.

V Set if an arithmetic underflow occurred i.e. the result can not be represented in the specified data type. Cleared otherwise.

C Set if a borrow is generated. Cleared otherwise.

N Set if the most significant bit of the result is set. Cleared otherwise.

INSTRUCTION FORMAT

Μνεμονιχ	ΒΣΟ/Τασκινγ Μνεμονιχ	Οπερανδσ	Φορματ	Βψτεσ
CMP	CMP	Rw_n,Rw_m	40 nm	2
CMP	CMP	Rw_n,[Rw_i]	48 n:10ii	2
CMP	CMP	Rw_n,[Rw_i+]	48 n:11ii	2
CMP	CMP	Rw_n,#$data_3$	48 n:0###	2
CMP	CMP	reg,#$data_{16}$	46 RR ## ##	4
CMP	CMP	reg,mem	42 RR MM MM	4

ΧΜΠΒ ΧΜΠΒ

Ιντεγερ Χομπαρε

ΧΜΠΒ οπ1, οπ2

OPERATION (op1)⇔ (op2)

DATA TYPES BYTE

The source operand specified by op1 is compared to the source operand specified by op2 by performing a 2's complement binary subtraction of op2 from op1. The flags are set according to the rules of subtraction. The operands remain unchanged.

FLAGS

E	Z	V	C	N
*	*	*	S	*

E Set if the value of op2 represents the lowest possible negative number. Cleared otherwise. Used to signal the end of a table.

Z Set if the result equals zero. Cleared otherwise.

V Set if an arithmetic underflow occurred i.e. the result can not be represented in the specified data type. Cleared otherwise.

C Set if a borrow is generated. Cleared otherwise.

N Set if the most significant bit of the result is set. Cleared otherwise.

INSTRUCTION FORMAT

Μνεμονιχ	ΒΣΟ/Τασκινγ Μνεμονιχ	Οπερανδσ	Φορματ	Βψτεσ
CMPB	CMP	Rb$_n$,Rbm	41 nm	2
CMPB	CMP	Rb$_n$,[Rw$_i$]	49 n:10ii	2
CMPB	CMP	Rb$_n$,[Rw$_i$+]	49 n:11ii	2
CMPB	CMP	Rb$_n$,#data$_3$	49 n:0###	2
CMPB	CMP	reg,#data$_{16}$	47 RR ## ##	4
CMPB	CMP	reg,mem	43 RR MM MM	4

ΧΜΠΔ1 ΧΜΠΔ1

Ιντεγερ Χομπαρε ανδ Δεχρεμεντ βψ 1

ΧΜΠΔ1 οπ1, οπ2

OPERATION **(op1)⇔ (op2)**
(op1)⇐ (op1) - 1

DATA TYPES **WORD**

This instruction is used to enhance the performance and flexibility of loops. The source operand specified by op1 is compared to the source operand specified by op2 by performing a 2's complement binary subtraction of op2 from op1. Operand op1 may specify ONLY GPR registers. Once the subtraction has completed, the operand op1 is decremented by one. Using the set flags, a branch instruction can then be used in conjunction with this instruction to form common high level language FOR loops of any range.

FLAGS

E	Z	V	C	N
*	*	*	S	*

E **Set if the value of op2 represents the lowest possible negative number. Cleared otherwise. Used to signal the end of a table.**

Z **Set if the result equals zero. Cleared otherwise.**

V **Set if an arithmetic underflow occurred, i.e. the result can not be represented in the specified data type. Cleared otherwise.**

C **Set if a borrow is generated. Cleared otherwise.**

N **Set if the most significant bit of the result is set. Cleared otherwise.**

INSTRUCTION FORMAT

Μνεμονιχ	ΒΣΟ/Τασκινγ Μνεμονιχ	Οπερανδσ	Φορματ	Βψτεσ
CMPD1	**CMPD1**	**Rw_n,#$data_4$**	**A0 #n**	**2**
CMPD1	**CMPD1**	**Rw_n,#$data_{16}$**	**A6 Fn ## ##**	**4**
CMPD1	**CMPD1**	**Rw_n,mem**	**A2 Fn MM MM**	**4**

ΧΜΠΔ2 ΧΜΠΔ2

Ιντεγερ Χομπαρε ανδ Δεχρεμεντ βψ 2

ΧΜΠΔ2 οπ1, οπ2

OPERATION **(op1)⇔ (op2)**
(op1)⇐ (op1) - 2

DATA TYPES **WORD**

This instruction is used to enhance the performance and flexibility of loops. The source operand specified by op1 is compared to the source operand specified by op2 by performing a 2's complement binary subtraction of op2 from op1. Operand op1 may specify ONLY GPR registers. Once the subtraction has completed, the operand op1 is decremented by two. Using the set flags, a branch instruction can then be used in conjunction with this instruction to form common high level language FOR loops of any range.

FLAGS

E	Z	V	C	N
*	*	*	S	*

E	**Set if the value of op2 represents the lowest possible negative number. Cleared otherwise. Used to signal the end of a table.**
Z	**Set if the result equals zero. Cleared otherwise.**
V	**Set if an arithmetic underflow occurred, i.e. the result can not be represented in the specified data type. Cleared otherwise.**
C	**Set if a borrow is generated. Cleared otherwise.**
N	**Set if the most significant bit of the result is set. Cleared otherwise.**

INSTRUCTION FORMAT

Μνεμονιχ	ΒΣΟ/Τασκινγ Μνεμονιχ	Οπερανδσ	Φορματ	Βψτεσ
CMPD2	**CMPD2**	**Rw$_n$,#data$_4$**	**B0 #n**	**2**
CMPD2	**CMPD2**	**Rw$_n$,#data$_{16}$**	**B6 Fn ## ##**	**4**
CMPD2	**CMPD2**	**Rw$_n$,mem**	**B2 Fn MM MM**	**4**

ΧΜΠΙ1 ΧΜΠΙ1

Ιντεγερ Χομπαρε ανδ Ινχρεμεντ βψ 1

ΧΜΠΙ1 οπ1, οπ2

OPERATION **(op1)⇔ (op2)**
(op1)⇐ (op1) + 1

DATA TYPES **WORD**

This instruction is used to enhance the performance and flexibility of loops. The source operand specified by op1 is compared to the source operand specified by op2 by performing a 2's complement binary subtraction of op2 from op1. Operand op1 may specify ONLY GPR registers. Once the subtraction has completed, the operand op1 is incremented by one. Using the set flags, a branch instruction can then be used in conjunction with this instruction to form common high level language FOR loops of any range.

FLAGS

E	Z	V	C	N
*	*	*	S	*

E **Set if the value of op2 represents the lowest possible negative number. Cleared otherwise. Used to signal the end of a table.**

Z **Set if result equals zero. Cleared otherwise.**

V **Set if an arithmetic underflow occurred, i.e. the result can not be represented in the specified data type. Cleared otherwise.**

C **Set if a borrow is generated. Cleared otherwise.**

N **Set if the most significant bit of the result is set. Cleared otherwise.**

INSTRUCTION FORMAT

Μνεμονιχ	ΒΣΟ/Τασκινγ Μνεμονιχ	Οπερανδσ	Φορματ	Βψτεσ
CMPI1	**CMPI1**	**Rw_n,#data$_4$**	**80 #n**	**2**
CMPI1	**CMPI1**	**Rw_n,#data$_{16}$**	**86 Fn ## ##**	**4**
CMPI1	**CMPI1**	**Rw_n,mem**	**82 Fn MM MM**	**4**

ΧΜΠΙ2 ΧΜΠΙ2

Ιντεγερ Χομπαρε ανδ Ινχρεμεντ βψ 2

ΧΜΠΙ2 οπ1, οπ2

OPERATION **(op1)⇔ (op2)**
(op1)⇐ (op1) + 2

DATA TYPES **WORD**

This instruction is used to enhance the performance and flexibility of loops. The source operand specified by op1 is compared to the source operand specified by op2 by performing a 2's complement binary subtraction of op2 from op1. Operand op1 may specify ONLY GPR registers. Once the subtraction has completed, the operand op1 is incremented by two. Using the set flags, a branch instruction can then be used in conjunction with this instruction to form common high level language FOR loops of any range.

FLAGS

E	Z	V	C	N
*	*	*	S	*

- **E** **Set if the value of op2 represents the lowest possible negative number. Cleared otherwise. Used to signal the end of a table.**
- **Z** **Set if result equals zero. Cleared otherwise.**
- **V** **Set if an arithmetic underflow occurred, i.e. the result can not be represented in the specified data type. Cleared otherwise.**
- **C** **Set if a borrow is generated. Cleared otherwise.**
- **N** **Set if the most significant bit of the result is set. Cleared otherwise.**

INSTRUCTION FORMAT

Μνεμονιχ	ΒΣΟ/Τασκινγ Μνεμονιχ	Οπερανδσ	Φορματ	Βψτεσ
CMPI2	**CMPI2**	**Rw_n,#data$_4$**	**90 #n**	**2**
CMPI2	**CMPI2**	**Rw_n,#data$_{16}$**	**96 Fn ## ##**	**4**
CMPI2	**CMPI2**	**Rw_n,mem**	**92 Fn MM MM**	**4**

ΧΠΛ ΧΠΛ

Ιντεγερ Ονεσ Χομπλεμεντ

ΧΠΛ οπ1

OPERATION **(op1)⇐ ¬ (op1)**

DATA TYPES **WORD**

Performs a 1’s complement of the source operand specified by op1. The result is stored back into op1.

FLAGS

E	Z	V	C	N
*	*	0	0	*

E	Set if the value of the source operand op1 represents the lowest possible negative number. Cleared otherwise. Used to signal the end of a table.
Z	Set if result equals zero. Cleared otherwise.
V	Always cleared.
C	Always cleared.
N	Set if the most significant bit of the result is set. Cleared otherwise.

INSTRUCTION FORMAT

Μνεμονιχ	ΒΣΟ/Τασκινγ Μνεμονιχ	Οπερανδσ	Φορματ	Βψτεσ
CPL	**CPL**	**Rw_n**	**91 n0**	**2**

ΧΠΛΒ ΧΠΛΒ

Ιντεγερ Ονεσ Χομπλεμεντ

ΧΠΛΒ οπ1

OPERATION **(op1)⇐ ¬ (op1)**

DATA TYPES **BYTE**

Performs a 1’s complement of the source operand specified by op1. The result is stored back into op1.

FLAGS

E	Z	V	C	N
*	*	0	0	*

E	**Set if the value of the source operand op1 represents the lowest possible negative number. Cleared otherwise. Used to signal the end of a table.**
Z	**Set if result equals zero. Cleared otherwise.**
V	**Always cleared.**
C	**Always cleared.**
N	**Set if the most significant bit of the result is set. Cleared otherwise.**

INSTRUCTION FORMAT

Μνεμονιχ	ΒΣΟ/Τασκινγ Μνεμονιχ	Οπερανδσ	Φορματ	Βψτεσ
CPLB	**CPL**	**Rb_n**	**B1 n0**	**2**

ΔΙΣΩΔΤ ΔΙΣΩΔΤ

Δισαβλε Ωατχηδογ Τιμερ

ΔΙΣΩΔΤ

OPERATION **Disable Watchdog Timer**

This instruction disables the Watchdog Timer. The Watchdog Timer is enabled by a reset. The DISWDT instruction allows the Watchdog Timer to be disabled for applications which do not require a watchdog function. Following a reset, this instruction can be executed at any time until either a Service Watchdog Timer instruction (SRVWDT) or an End of Initialization instruction (EINIT) are executed. Once one of these instructions has been executed, the DISWDT instruction will have no effect. To insure that this instruction is not accidentally executed, it is implemented as a protected instruction.

FLAGS

E	Z	V	C	N
-	-	-	-	-

E	**Not affected.**
Z	**Not affected.**
V	**Not affected.**
C	**Not affected.**
N	**Not affected.**

INSTRUCTION FORMAT

Μνεμονιχ	ΒΣΟ/Τασκινγ Μνεμονιχ	Οπερανδσ	Φορματ	Βψτεσ
DISWDT	**DISWDT**		**A5 5A A5 A5**	**4**

ΔΙς ΔΙς

16/16 Σιγνεδ Διϖισιον

ΔΙς οπ1

OPERATION (MDL) ⇐ (MDL) / (op1)
(MDH) ⇐ (MDL) mod (op1)

DATA TYPES WORD

Performs a signed 16-bit by 16-bit division of the low order word stored in the MD register by the source word operand op1. The quotient is then stored in the low order word of the MD register, MDL, and the remainder is stored in the high order word of the MD register, MDH.

FLAGS

E	Z	V	C	N
0	*	S	0	*

E	Always cleared.
Z	Set if result equals zero. Cleared otherwise.
V	Set if an arithmetic overflow occurred. Overflow occurs when the result can not be represented in a word data type or if the divisor, op1, was 0. Cleared otherwise.
C	Always cleared.
N	Set if the most significant bit of the result is set. Cleared otherwise.

INSTRUCTION FORMAT

Μνεμονιχ	ΒΣΟ/Τασκινγ Μνεμονιχ	Οπερανδσ	Φορματ	Βψτεσ
DIV	DIV	Rw_n	4B nn	2

ΔΙςΛ ΔΙςΛ

32/16 Σιγνεδ Διϖισιον

ΔΙςΛ οπ1

OPERATION (MDL)⇐ (MD) / (op1)
(MDH) ⇐ (MD) mod (op1)

DATA TYPES WORD, DOUBLE WORD

Performs an extended signed 32-bit by 16-bit division of the two words stored in the MD register by the source word operand op1. The signed quotient is then stored in the low order word of the MD register, MDL, and the remainder is stored in the high order word of the MD register, MDH.

FLAGS

E	Z	V	C	N
0	*	S	0	*

E	Always cleared.
Z	Set if result equals zero. Cleared otherwise.
V	Set if an arithmetic overflow occurred. Overflow occurs when the result can not be represented in a word data type or if the divisor, op1, was 0. Cleared otherwise.
C	Always cleared.
N	Set if the most significant bit of the result is set. Cleared otherwise.

INSTRUCTION FORMAT

Μνεμονιχ	ΒΣΟ/Τασκινγ Μνεμονιχ	Οπερανδσ	Φορματ	Βψτεσ
DIVL	DIVL	Rw_n	6B nn	2

ΔΙςΛΥ ΔΙςΛΥ

32/16 Υνσιγνεδ Διϖισιον

ΔΙςΛΥ οπ1

OPERATION (MDL) ⇐ (MD) / (op1)
(MDH) ⇐ (MD) mod (op1)

DATA TYPES WORD, DOUBLE WORD

Performs an extended unsigned 32-bit by 16-bit division of the two words stored in the MD register by the source word operand op1. The unsigned quotient is then stored in the low order word of the MD register, MDL, and the remainder is stored in the high order word of the MD register, MDH.

FLAGS

E	Z	V	C	N
0	*	S	0	*

E	Always cleared.
Z	Set if result equals zero. Cleared otherwise.
V	Set if an arithmetic overflow occurred. Overflow occurs when the result can not be represented in a word data type or if the divisor, op1, was 0. Cleared otherwise.
C	Always cleared.
N	Set if the most significant bit of the result is set. Cleared otherwise.

INSTRUCTION FORMAT

Μνεμονιχ	ΒΣΟ/Τασκινγ Μνεμονιχ	Οπερανδσ	Φορματ	Βψτεσ
DIVLU	DIVLU	Rw_n	7B nn	2

ΔΙςΥ ΔΙςΥ

16/16 Υνσιγνεδ Διϖισιον

ΔΙςΥ οπ1

OPERATION (MDL) ⇐ (MDL) / (op1)
(MDH) ⇐ (MDL) mod (op1)

DATA TYPES WORD

Performs an unsigned 16-bit by 16-bit division of the low order word stored in the MD register by the source word operand op1. The unsigned quotient is then stored in the low order word of the MD register, MDL, and the remainder is stored in the high order word in the MD register, MDH.

FLAGS

E	Z	V	C	N
0	*	S	0	*

E	Always cleared.
Z	Set if result equals zero. Cleared otherwise.
V	Set if an arithmetic overflow occurred. Overflow occurs when the result can not be represented in a word data type or if the divisor, op1, was 0. Cleared otherwise.
C	Always cleared.
N	Set if the most significant bit of the result is set. Cleared otherwise.

INSTRUCTION FORMAT

Μνεμονιχ	ΒΣΟ/Τασκινγ Μνεμονιχ	Οπερανδσ	Φορματ	Βψτεσ
DIVU	DIVU	Rw_n	5B nn	2

EINIT EINIT

Ενδ οφ Ινιτιαλιζατιον

EINIT

OPERATION **END of INITIALIZATION**

This instruction is used to signal the end of the initialization portion of a program. After a reset, the reset output pin RSTOUT is pulled low. It remains low until the EINIT instruction has been executed at which time it goes high. This enables the program to signal the external circuitry that it has successfully initialized the microcontroller. After the EINIT instruction has been executed, execution of the Disable Watchdog Timer instruction (DISWDT) has no effect. To insure that this instruction is not accidentally executed, it is implemented as a protected instruction.

FLAGS

E	Z	V	C	N
-	-	-	-	-

E **Not affected.**
Z **Not affected.**
V **Not affected.**
C **Not affected.**
N **Not affected.**

INSTRUCTION FORMAT

Μνεμονιχ	ΒΣΟ/Τασκινγ Μνεμονιχ	Οπερανδσ	Φορματ	Βψτεσ
EINIT	**EINIT**		**B5 4A B5 B5**	**4**

ΙΔΛΕ ΙΔΛΕ

Εντερ Ιδλε Μοδε

ΙΔΛΕ

OPERATION **Enter Idle Mode**

This instruction causes the part to enter the idle mode. In this mode, the CPU is powered down while the peripherals remain running. It remains powered down until a peripheral interrupt or external interrupt occurs. To insure that this instruction is not accidentally executed, it is implemented as a protected instruction.

FLAGS

E	Z	V	C	N
-	-	-	-	-

E **Not affected.**
Z **Not affected.**
V **Not affected.**
C **Not affected.**
N **Not affected.**

INSTRUCTION FORMAT

Μνεμονιχ	ΒΣΟ/Τασκινγ Μνεμονιχ	Οπερανδσ	Φορματ	Βψτεσ
IDLE	**IDLE**		**87 78 87 87**	**4**

ϑB ϑB

Ρελατιϖε ϑυμπ ιφ Βιτ Σετ

ϑB οπ1, οπ2

OPERATION

```
IF (op1) = 1 THEN
        (IP) ⇐ (IP) + sign_extend (op2)
ELSE
        next instruction
END IF
```

DATA TYPES **BIT**

If the bit specified by op1 is set, program execution continues at the location of the instruction pointer, IP, plus the specified displacement, op2. The displacement is a two's complement number which is sign extended and counts the relative distance in words. The value of the IP in the target address calculation is the address of the instruction following the JB instruction. If the specified bit is clear, the instruction following the JB instruction is executed.

FLAGS

E	Z	V	C	N
-	-	-	-	-

E **Not affected.**
Z **Not affected.**
V **Not affected.**
C **Not affected.**
N **Not affected.**

INSTRUCTION FORMAT

Μνεμονιχ	ΒΣΟ/Τασκινγ Μνεμονιχ	Οπερανδσ	Φορματ	Βψτεσ
JB	**JB**	**bitaddr$_{Q.q}$, rel**	**8A QQ rr q0**	**4**

ϑΒΧ ϑΒΧ

Ρελατιϖε ϑυμπ ιφ Βιτ Σετ ανδ Χλεαρ Βιτ

ϑΒΧ οπ1, οπ2

OPERATION

```
IF (op1) = 1 THEN
        (op1) ⇐ 0
        (IP) ⇐ (IP) + sign_extend (op2)
ELSE
        (op1) ⇐ 0
        next instruction
END IF
```

DATA TYPES BIT

If the bit specified by op1 is set, program execution continues at the location of the instruction pointer, IP, plus the specified displacement,op2. The bit specified by op1 is cleared allowing implementation of semaphore operations. The displacement is a two's complement number which is sign extended and counts the relative distance in words. The value of the IP used in the target address calculation is the address of the instruction following the JBC instruction. If the specified bit was clear, the instruction following the JBC instruction is executed.

FLAGS

E	Z	V	C	N
0	$\overline{B}$	0	0	B

E	Always cleared.
Z	Contains the logical negation of the previous state of the specified bit.
V	Always cleared.
C	Always cleared.
N	Contains the previous state of the specified bit.

INSTRUCTION FORMAT

Μνεμονιχ	ΒΣΟ/Τασκινγ Μνεμονιχ	Οπερανδσ	Φορματ	Βψτεσ
JBC	JBC	bitaddr$_{Q.q}$, rel	AA QQ rr q0	4

ϑΜΠΑ ϑΜΠΑ

Αβσολυτε Χονδιτιοναλ ϑυμπ

ϑΜΠΑ οπ1, οπ2

OPERATION

```
IF (op1) THEN
        (IP) ⇐ op2
ELSE
        next instruction
END IF
```

If the condition specified by op1 is met, a branch to the absolute address specified by op2 is taken. If the condition is not met, no action is taken, and the instruction following the JMPA instruction is executed normally.

CONDITION CODES See Table A.2.

FLAGS

E	Z	V	C	N
-	-	-	-	-

E	**Not affected.**
Z	**Not affected.**
V	**Not affected.**
C	**Not affected.**
N	**Not affected.**

INSTRUCTION FORMAT

Μνεμονιχ	ΒΣΟ/Τασκινγ Μνεμονιχ	Οπερανδσ	Φορματ	Βψτεσ
JMPA	**JMP**	**cc,caddr**	**EA c0 MM MM**	**4**

Χονδιτιον Χοδεσ

Α–2. Χονδιτιον Χοδε Τεστσ φορ Βρανχη ανδ Χαλλ Ινστρυχτιονσ

Χονδιτιον Χοδε Μνεμονιχσ χχ	Τεστ	Δεσχριπτιον	Χονδιτιον Χοδε Νυμβερ χ
cc_UC	**1 = 1**	**Unconditional**	**0h**
cc_Z	**Z = 1**	**Zero**	**2h**
cc_NZ	**Z = 0**	**Not zero**	**3h**
cc_V	**V = 1**	**Overflow**	**4h**
cc_NV	**V = 0**	**No overflow**	**5h**
cc_N	**N = 1**	**Negative**	**6h**
cc_NN	**N = 0**	**Not negative**	**7h**
cc_C	**C = 1**	**Carry**	**8h**
cc_NC	**C = 0**	**No carry**	**9h**
cc_EQ	**Z = 1**	**Equal**	**2h**
cc_NE	**Z = 0**	**Notequal**	**3h**
cc_ULT	**C = 1**	**Unsigned less than**	**8h**
cc_ULE	**(Z∨C) = 1**	**Unsigned less than or equal**	**Fh**
cc_UGE	**C = 0**	**Unsigned greater than or equal**	**9h**
cc_UGT	**(Z∨C) = 0**	**Unsigned greater than**	**Eh**
cc_SLT	**(N⊕V) = 1**	**Signed less than**	**Ch**
cc_SLE	**(Z∨(N⊕V)) = 1**	**Signed less than or equal**	**Bh**
cc_SGE	**(N⊕V) = 0**	**Signed greater than or equal**	**Dh**
cc_SGT	**(Z∨(N⊕V)) = 0**	**Signed greater than**	**Ah**
cc_NET	**(Z∨E) = 0**	**Not equal AND not end of table**	**1h**

ϑΜΠΙ ϑΜΠΙ

Ινδιρεχτ Χονδιτιοναλ ϑυμπ

ϑΜΠΙ οπ1, οπ2

```
OPERATION   IF (op1) THEN
                    (IP) ⇐ (op2)
            ELSE
                    next instruction
            END IF
```

If the condition specified by op1 is met, a branch to the location specified indirectly by op2 is taken. If the condition is not met, no action is taken, and the next instruction is executed normally.

CONDITION CODES See Table A.2. or A.1.

FLAGS

E	Z	V	C	N
-	-	-	-	-

E Not affected.
Z Not affected.
V Not affected.
C Not affected.
N Not affected.

INSTRUCTION FORMAT

Μνεμονιχ	ΒΣΟ/Τασκινγ Μνεμονιχ	Οπερανδσ	Φορματ	Βψτεσ
JMPI	**JMP**	**cc,[Rw]**	**9C cn**	**2**

ϑΜΠΡ ϑΜΠΡ

Ρελατιϖε Χονδιτιοναλ ϑυμπ

ϑΜΠΡ οπ1, οπ2

OPERATION

```
IF (op1) THEN
        (IP) ⇐ (IP) + sign_extend (op2)
ELSE
        next instruction
END IF
```

If the condition specified by op1 is met, program execution continues at the location of the instruction pointer, IP, plus the specified displacement, op2. The displacement is a two's complement number which is sign extended and counts the relative distance in words. The value of the IP used in the target address calculation is the address of the instruction following the JMPR instruction. If the specified condition is not met, program execution continues normally with the instruction following the JMPR instruction.

CONDITION CODES See Table A.2 or A.1

FLAGS

E	Z	V	C	N
-	-	-	-	-

E Not affected.
Z Not affected.
V Not affected.
C Not affected.
N Not affected.

INSTRUCTION FORMAT

Μνεμονιχ	ΒΣΟ/Τασκινγ Μνεμονιχ	Οπερανδσ	Φορματ	Βψτεσ
JMPR	**JMP**	**cc, rel**	**cD rr**	**2**

ϑΜΠΣ ϑΜΠΣ

Αβσολυτε Ιντερ–σεγμεντ ϑυμπ

ϑΜΠΣ οπ1, οπ2

OPERATION **(CSP) ⇐ op1**
(IP) ⇐ op2

Branches unconditionally to the absolute address specified by op2 within the segment specified by op1.

FLAGS

E	Z	V	C	N
-	-	-	-	-

E **Not affected.**
Z **Not affected.**
V **Not affected.**
C **Not affected.**
N **Not affected.**

INSTRUCTION FORMAT

Μνεμονιχ	ΒΣΟ/Τασκινγ Μνεμονιχ	Οπερανδσ	Φορματ	Βψτεσ
JMPS	**JMP**	**seg,caddr**	**FA 0:00ss MM MM**	**4**

ϑNB ϑNB

Ρελατιϖε ϑυμπ ιφ Βιτ Χλεαρ

ϑNB οπ1, οπ2

OPERATION

```
IF (op1)=0 THEN
        (IP) ⇐ (IP) + sign_extend (op2)
ELSE
        next instruction
END IF
```

DATA TYPES BIT

If the bit specified by op1 is clear, program execution continues at the location of the instruction pointer, IP, plus the specified displacement, op2. The displacement is a two's complement number which is sign extended and counts the relative distance in words. The value of the IP used in the target address calculation is the address of the instruction following the JNB instruction. If the specified bit is set , the instruction following the JNB instruction is executed.

FLAGS

E	Z	V	C	N
-	-	-	-	-

E	Not affected.
Z	Not affected.
V	Not affected.
C	Not affected.
N	Not affected.

INSTRUCTION FORMAT

Μνεμονιχ	ΒΣΟ/Τασκινγ Μνεμονιχ	Οπερανδσ	Φορματ	Βψτεσ
JNB	JNB	bitaddr$_{Q.q}$, rel	9A QQ rr q0	4

ϑNBΣ ϑNBΣ

Ρελατιϖε ϑυμπ ιφ Βιτ Χλεαρ ανδ Σετ Βιτ

ϑNBΣ οπ1, οπ2

OPERATION

```
IF (op1)=0 THEN
        (op1)⇐ 1
        (IP) ⇐ (IP) + sign_extend (op2)
ELSE
        (op1)⇐ 1
        next instruction
END IF
```

DATA TYPES **BIT**

If the bit specified by op1 is clear, program execution continues at the location of the instruction pointer, IP, plus the specified displacement, op2. The bit specified by op1 is set allowing implementation of semaphore operations. The displacement is a two's complement number which is sign extended and counts the relative distance in words. The value of the IP used in the target address calculation is the address of the instruction following the JNBS instruction. If the specified bit is set, the instruction following the JNBS instruction is executed.

FLAGS

E	Z	V	C	N
0	$\overline{B}$	0	0	B

E **Always cleared.**
Z **Contains the logical negation of the previous state of the specified bit.**
V **Always cleared.**
C **Always cleared.**
N **Contains the previous state of the specified bit.**

INSTRUCTION FORMAT

Μνεμονιχ	ΒΣΟ/Τασκινγ Μνεμονιχ	Οπερανδσ	Φορματ	Βψτεσ
JNBS	**JNBS**	**bitaddr$_{Q.q}$, rel**	**BA QQ rr q0**	**4**

MOς MOς

Μοϖε Δατα

MOς οπ1, οπ2

OPERATION **(op1)⇐ (op2)**

DATA TYPES **WORD**

Moves the contents of the source operand specified by op2 to the location specified by the destination operand op1. The contents of the moved data is examined, and the condition codes are updated accordingly.

FLAGS

E	Z	V	C	N
*	*	-	-	*

E Set if the value of op2 represents the lowest possible negative number. Cleared otherwise. Used to signal the end of a table.

Z Set if the value of the source operand op2 equals zero. Cleared otherwise.

V Not affected.

C Not affected.

N Set if the most significant bit of the source operand op2 is set. Cleared otherwise.

INSTRUCTION FORMAT

Μνεμονιχ	ΒΣΟ/Τασκινγ Μνεμονιχ	Οπερανδσ	Φορματ	Βψτεσ
MOV	MOV	Rw$_n$,Rw$_m$	F0 nm	2
MOV	MOV	Rw$_n$,#data$_4$	E0 #n	2
MOV	MOV	reg,#data$_{16}$	E6 RR ## ##	4
MOV	MOV	Rw$_n$,[Rw$_m$]	A8 nm	2
MOV	MOV	Rw$_n$,[Rw$_m$+]	98 nm	2
MOV	MOV	[Rw$_m$],Rw$_n$	B8 nm	2
MOV	MOV	[-Rw$_m$],Rw$_n$	88 nm	2
MOV	MOV	[Rw$_n$],[Rw$_m$]	C8 nm	2
MOV	MOV	[Rw$_n$+],[Rw$_m$]	D8 nm	2
MOV	MOV	[Rw$_n$],[Rw$_m$+]	E8 nm	2
MOV	MOV	Rw$_n$,[Rw$_m$+#d$_{16}$]	D4 nm ## ##	4
MOV	MOV	[Rw$_m$+#d$_{16}$],Rw$_n$	C4 nm ## ##	4
MOV	MOV	[Rw$_n$],mem	84 0n MM MM	4
MOV	MOV	mem,[Rw$_n$]	94 0n MM MM	4
MOV	MOV	reg,mem	F2 RR MM MM	4
MOV	MOV	mem,reg	F6 RR MM MM	4

MOςB MOςB

Μοϖε Δατα

MOςB οπ1, οπ2

OPERATION **(op1)⇐ (op2)**

DATA TYPES **BYTE**

Moves the contents of the source operand specified by op2 to the location specified by the destination operand op1. The contents of the moved data is examined, and the condition flags are updated accordingly.

FLAGS

E	Z	V	C	N
*	*	-	-	*

E **Set if the value of op2 represents the lowest possible negative number. Cleared otherwise. Used to signal the end of a table.**

Z **Set if the value of the source operand op2 equals zero. Cleared otherwise.**

V **Not affected.**

C **Not affected.**

N **Set if the most significant bit of the source operand op2 is set. Cleared otherwise.**

INSTRUCTION FORMAT

Μνεμονιχ	ΒΣΟ/Τασκινγ Μνεμονιχ	Οπερανδσ	Φορματ	Βψτεσ
MOVB	**MOV**	**Rb$_n$,Rbm**	**F1 nm**	**2**
MOVB	**MOV**	**Rb$_n$,#data$_4$**	**E1 #n**	**2**
MOVB	**MOV**	**reg,#data$_{16}$**	**E7 RR ## ##**	**4**
MOVB	**MOV**	**Rb$_n$,[Rw$_m$]**	**A9 nm**	**2**
MOVB	**MOV**	**Rb$_n$,[Rw$_m$+]**	**99 nm**	**2**
MOVB	**MOV**	**[Rw$_m$],Rb$_n$**	**B9 nm**	**2**
MOVB	**MOV**	**[-Rw$_m$],Rb$_n$**	**89 nm**	**2**
MOVB	**MOV**	**[Rw$_n$],[Rw$_m$]**	**C9 nm**	**2**
MOVB	**MOV**	**[Rw$_n$+],[Rw$_m$]**	**D9 nm**	**2**
MOVB	**MOV**	**[Rw$_n$],[Rw$_m$+]**	**E9 nm**	**2**
MOVB	**MOV**	**Rb$_n$,[Rw$_m$+#d$_{16}$]**	**F4 nm ## ##**	**4**
MOVB	**MOV**	**[Rw$_m$+#d$_{16}$],Rb$_n$**	**E4 nm ## ##**	**4**
MOVB	**MOV**	**[Rw$_n$],mem**	**A4 0n MM MM**	**4**
MOVB	**MOV**	**mem,[Rw$_n$]**	**B4 0n MM MM**	**4**
MOVB	**MOV**	**reg,mem**	**F3 RR MM MM**	**4**
MOVB	**MOV**	**mem,reg**	**F7 RR MM MM**	**4**

ΜΟςΒΣ ΜΟςΒΣ

Μοϖε Βψτε Σιγν Εξτενδ

ΜΟςΒΣ οπ1, οπ2

OPERATION

```
(low byte op1) ⇐ (op2)
IF (op2_7)=1 THEN
        (high byte op1) ⇐ 0FFh
ELSE
        (high byte op1) ⇐ 00h
END IF
```

DATA TYPES WORD, BYTE

Moves and sign extends the contents of the source byte specified by op2 to the word location specified by the destination operand op1. The contents of the moved data are examined, and the condition flags are updated accordingly.

FLAGS

E	Z	V	C	N
0	*	-	-	*

E	Always cleared.
Z	Set if the value of the source operand op2 equals zero. Cleared otherwise.
V	Not affected.
C	Not affected.
N	Set if the most significant bit of the source operand op2 is set. Cleared otherwise.

INSTRUCTION FORMAT

Μνεμονιχ	ΒΣΟ/Τασκινγ Μνεμονιχ	Οπερανδσ	Φορματ	Βψτεσ
MOVBS	MOVBS	Rb$_n$,Rbm	D0 mn	2
MOVBS	MOVBS	reg,mem	D2 RR MM MM	4
MOVBS	MOVBS	mem,reg	D5 RR MM MM	4

MOςBZ MOςBZ

Μοϖε Βψτε Ζερο Εξτενδ

MOςBZ οπ1, οπ2

OPERATION (low byte op1) ⇐ (op2)
(high byte op1) ⇐ 00h

DATA TYPES WORD, BYTE

Moves and zero extends the contents of the source byte specified by op2 to the word location specified by the destination operand op1. The contents of the moved data are examined, and the condition flags are updated accordingly.

FLAGS

E	Z	V	C	N
0	*	-	-	0

E	Always cleared.
Z	Set if the value of the source operand op2 equals zero. Cleared otherwise.
V	Not affected.
C	Not affected.
N	Always cleared.

INSTRUCTION FORMAT

Μνεμονιχ	ΒΣΟ/Τασκινγ Μνεμονιχ	Οπερανδσ	Φορματ	Βψτεσ
MOVBZ	MOVBZ	Rb$_n$, Rbm	C0 mn	2
MOVBZ	MOVBZ	reg,mem	C2 RR MM MM	4
MOVBZ	MOVBZ	mem,reg	C5 RR MM MM	4

MYΛ

MYΛ

Σιγνεδ Μυλτιπλιχατιον

MYΛ οπ1, οπ2

OPERATION **(MD) ⇐ (op1) x (op2)**

DATA TYPES **WORD**

Performs a 16-bit by 16-bit signed multiplication using the two words specified by operands op1 and op2 respectively. The signed 32-bit result is placed in the MD register.

FLAGS

E	Z	V	C	N
0	*	S	0	*

E Always cleared.
Z Set if result equals zero. Cleared otherwise.
V This bit is set if the result cannot be represented in a word data type. Cleared otherwise.
C Always cleared.
N Set if the most significant bit of the result is set. Cleared otherwise.

INSTRUCTION FORMAT

Μνεμονιχ	ΒΣΟ/Τασκινγ Μνεμονιχ	Οπερανδσ	Φορματ	Βψτεσ
MUL	**MUL**	**Rw_n,Rw_m**	**0B nm**	**2**

ΜΥΛΥ ΜΥΛΥ

Υνσιγνεδ Μυλτιπλιχατιον

ΜΥΛΥ οπ1, οπ2

OPERATION **(MD) ⇐ (op1) x (op2)**

DATA TYPES **WORD**

Performs a 16-bit by 16-bit unsigned multiplication using the two words specified by operands op1 and op2 respectively. The unsigned 32-bit result is placed in the MD register.

FLAGS

E	Z	V	C	N
0	*	S	0	*

E	Always cleared.
Z	Set if result equals zero. Cleared otherwise.
V	This bit is set if the result cannot be represented in a word data type. Cleared otherwise.
C	Always cleared.
N	Set if the most significant bit of the result is set. Cleared otherwise.

INSTRUCTION FORMAT

Μνεμονιχ	ΒΣΟ/Τασκινγ Μνεμονιχ	Οπερανδσ	Φορματ	Βψτεσ
MULU	**MULU**	**Rw_n,Rw_m**	**1B nm**	**2**

ΝΕΓ ΝΕΓ

Ιντεγερ Τωοσ Χομπλεμεντ

ΝΕΓ οπ1

OPERATION **(op1)⇐ 0 - (op1)**

DATA TYPES **WORD**

Performs a binary 2's complement of the source operand specified by op1. The result is then stored in op1.

FLAGS

E	Z	V	C	N
*	*	*	S	*

E **Set if the value of op1 represents the lowest possible negative number. Cleared otherwise. Used to signal the end of a table.**

Z **Set if result equals zero. Cleared otherwise.**

V **Set if an arithmetic underflow occurred, i.e. the result can not be represented in the specified data type. Cleared otherwise.**

C **Set if a borrow is generated. Cleared otherwise.**

N **Set if the most significant bit of the result is set. Cleared otherwise.**

INSTRUCTION FORMAT

Μνεμονιχ	ΒΣΟ/Τασκινγ Μνεμονιχ	Οπερανδσ	Φορματ	Βψτεσ
NEG	**NEG**	**Rw_n**	**81 n0**	**2**

NEΓB NEΓB

Ιντεγερ Τωοσ Χομπλεμεντ

NEΓB οπ1

OPERATION **(op1)⇐ 0 - (op1)**

DATA TYPES **BYTE**

Performs a binary 2’s complement of the source operand specified by op1. The result is then stored in op1.

FLAGS

E	Z	V	C	N
*	*	*	S	*

E **Set if the value of op1 represents the lowest possible negative number. Cleared otherwise. Used to signal the end of a table.**

Z **Set if result equals zero. Cleared otherwise.**

V **Set if an arithmetic underflow occurred, i.e. the result can not be represented in the specified data type. Cleared otherwise.**

C **Set if a borrow is generated. Cleared otherwise.**

N **Set if the most significant bit of the result is set. Cleared otherwise.**

INSTRUCTION FORMAT

Μνεμονιχ	ΒΣΟ/Τασκινγ Μνεμονιχ	Οπερανδσ	Φορματ	Βψτεσ
NEGB	**NEG**	**Rb**$_n$	**A1 n0**	**2**

ΝΟΠ ΝΟΠ

Νο Οπερατιον

ΝΟΠ

OPERATION **No Operation**

This instruction causes a null operation to be performed. A null operation causes no change in the status of the flags.

FLAGS

E	Z	V	C	N
-	-	-	-	-

E	**Not affected.**
Z	**Not affected.**
V	**Not affected.**
C	**Not affected.**
N	**Not affected.**

INSTRUCTION FORMAT

Μνεμονιχ	ΒΣΟ/Τασκινγ Μνεμονιχ	Οπερανδσ	Φορματ	Βψτεσ
NOP	**NOP**		**CC 00**	**2**

ΟΡ ΟΡ

Λογιχαλ ΟΡ

ΟΡ οπ1, οπ2

OPERATION **(op1)⇐ (op1) ∨ (op2)**

DATA TYPES **WORD**

Performs a bit-wise logical OR of the source operand specified by op2 and the destination operand specified by op1. The result is then stored in op1.

FLAGS

E	Z	V	C	N
*	*	0	0	*

E **Set if the value of op2 represents the lowest possible negative number. Cleared otherwise. Used to signal the end of a table.**

Z **Set if result equals zero. Cleared otherwise.**

V **Always cleared.**

C **Always cleared.**

N **Set if the most significant bit of the result is set. Cleared otherwise.**

INSTRUCTION FORMAT

Μνεμονιχ	ΒΣΟ/Τασκινγ Μνεμονιχ	Οπερανδσ	Φορματ	Βψτεσ
OR	**OR**	**Rw_n, Rw_m**	**70 nm**	**2**
OR	**OR**	**Rw_n,#$data_3$**	**78 n:0###**	**2**
OR	**OR**	**reg,#$data_{16}$**	**76 RR ## ##**	**4**
OR	**OR**	**Rw_n,[Rw_i]**	**78 n:10ii**	**2**
OR	**OR**	**Rw_n,[Rw_i+]**	**78 n:11ii**	**2**
OR	**OR**	**reg,mem**	**72 RR MM MM**	**4**
OR	**OR**	**mem,reg**	**74 RR MM MM**	**4**

OPB OPB

Λογιχαλ OP

OPB οπ1, οπ2

OPERATION **(op1)⇐ (op1)∨ (op2)**

DATA TYPES **BYTE**

Performs a bit-wise logical OR of the source operand specified by op2 and the destination operand specified by op1. The result is then stored in op1.

FLAGS

E	Z	V	C	N
*	*	0	0	*

E	**Set if the value of op2 represents the lowest possible negative number. Cleared otherwise. Used to signal the end of a table.**
Z	**Set if result equals zero. Cleared otherwise.**
V	**Always cleared.**
C	**Always cleared.**
N	**Set if the most significant bit of the result is set. Cleared otherwise.**

INSTRUCTION FORMAT

Μνεμονιχ	ΒΣΟ/Τασκινγ Μνεμονιχ	Οπερανδσ	Φορματ	Βψτεσ
ORB	**OR**	**Rb$_n$,Rbm**	**71 nm**	**2**
ORB	**OR**	**Rb$_n$,#data$_8$**	**79 n:0###**	**2**
ORB	**OR**	**reg,#data$_{16}$**	**77 RR ## ##**	**4**
ORB	**OR**	**Rb$_n$,[Rw$_i$]**	**79 n:10ii**	**2**
ORB	**OR**	**Rb$_n$,[Rw$_i$+]**	**79 n:11ii**	**2**
ORB	**OR**	**reg,mem**	**73 RR MM MM**	**4**
ORB	**OR**	**mem,reg**	**75 RR MM MM**	**4**

ΠΧΑΛΛ ΠΧΑΛΛ

Πυση Ωορδ ανδ Χαλλ Συβρουτινε Αβσολυτε

ΠΧΑΛΛ οπ1, οπ2

OPERATION

(tmp) ⇐ (op1)
(SP) ⇐ (SP) - 2
((SP)) ⇐ (tmp)
(SP) ⇐ (SP) - 2
((SP)) ⇐ (IP)
(IP) ⇐ op2

DATA TYPES WORD

Pushes the word specified by operand op1 and the value of the instruction pointer, IP, onto the system stack, and branches to the absolute memory location specified by the second operand op2. Because the IP always points to the instruction following the branch instruction, the value stored on the system stack represents the return address of the calling routine.

FLAGS

E	Z	V	C	N
*	*	-	-	*

E Set if the value of the pushed operand op1 represents the lowest possible negative number. Cleared otherwise. Used to signal the end of a table.
Z Set if the value of the pushed operand op1 equals zero. Cleared otherwise.
V Not affected.
C Not affected.
N Set if the most significant bit of the pushed operand op1 is set. Cleared otherwise.

INSTRUCTION FORMAT

Μνεμονιχ	ΒΣΟ/Τασκινγ Μνεμονιχ	Οπερανδσ	Φορματ	Βψτεσ
PCALL	PCALL	reg,caddr	E2 RR MM MM	4

ΠΟΠ ΠΟΠ

Ποπ Ωορδ φρομ Σψστεμ Σταχκ

ΠΟΠ οπ1

OPERATION **(tmp)⇐ ((SP))**
(SP) ⇐ (SP) + 2
(op1)⇐ (tmp)

DATA TYPES **WORD**

Pops one word from the system stack specified by the Stack Pointer into the operand specified by op1. The Stack Pointer is then incremented by two.

FLAGS

E	Z	V	C	N
*	*	-	-	*

E **Set if the value of the popped word represents the lowest possible negative number. Cleared otherwise. Used to signal the end of a table.**

Z **Set if the value of the popped word equals zero. Cleared otherwise.**

V **Not affected.**

C **Not affected.**

N **Set if the most significant bit of the popped word is set. Cleared otherwise.**

INSTRUCTION FORMAT

Μνεμονιχ	ΒΣΟ/Τασκινγ Μνεμονιχ	Οπερανδσ	Φορματ	Βψτεσ
POP	**POP**	**reg**	**FC RR**	**2**

ΠΡΙΟΡ ΠΡΙΟΡ

Πριοριτιζε Ρεγιστερ

ΠΡΙΟΡ οπ1, οπ2

OPERATION

```
(tmp) ⇐ (op2)
(count) ⇐ 0
DO WHILE $(tmp_{15}) \neq 1$ AND $count \neq 15$ AND $op2 \neq 0$
        $(tmp_n) \Leftarrow (tmp_{n-1})$
        (count) ⇐ (count) +1
END WHILE
(op1) ⇐ (count)
```

DATA TYPES WORD

This instruction stores a count value in the word operand specified by op1 indicating the number of single bit shifts required to normalize the operand op2 so that its MSB is equal to one. If the source operand op2 equals zero, a zero is written to operand op1 and the zero flag is set. Otherwise the zero flag is cleared.

FLAGS

E	Z	V	C	N
0	S	0	0	0

E	Always cleared.
Z	Set if the source operand op2 equals zero. Cleared otherwise.
V	Always cleared.
C	Always cleared.
N	Always cleared.

INSTRUCTION FORMAT

Μνεμονιχ	ΒΣΟ/Τασκινγ Μνεμονιχ	Οπερανδσ	Φορματ	Βψτεσ
PRIOR	PRIOR	Rw_n,Rw_m	2B nm	2

ΠΥΣΗ ΠΥΣΗ

Πυση Ωορδ ον Σψστεμ Σταχκ

ΠΥΣΗ οπ1

OPERATION **(tmp)⇐ (op1)**
(SP) ⇐ (SP) - 2
((SP)) ⇐ (tmp)

DATA TYPES **WORD**

Moves the word specified by operand op1 to the location in the internal system stack specified by the Stack Pointer after the Stack Pointer has been decremented by two.

FLAGS

E	Z	V	C	N
*	*	-	-	*

E	**Set if the value of the pushed word represents the lowest possible negative number. Cleared otherwise. Used to signal the end of a table.**
Z	**Set if the pushed word is equal to zero. Cleared otherwise.**
V	**Not affected.**
C	**Not affected.**
N	**Set if the most significant bit of the pushed word is set. Cleared otherwise.**

INSTRUCTION FORMAT

Μνεμονιχ	ΒΣΟ/Τασκινγ Μνεμονιχ	Οπερανδσ	Φορματ	Βψτεσ
PUSH	**PUSH**	**reg**	**EC RR**	**2**

ΠΩΡΔΝ ΠΩΡΔΝ

Εντερ Ποωερ Δοων Μοδε

ΠΩΡΔΝ

OPERATION **Enter Power Down Mode**

This instruction causes the part to enter the power down mode. In this mode, all peripherals and the CPU are powered down until the part is externally reset. To insure that this instruction is not accidentally executed, it is implemented as a protected instruction. To further control the action of this instruction, the PWRDN instruction is only enabled when the non-maskable interrupt pin ($\overline{\text{NMI}}$) is in the low state. Otherwise, this instruction has no effect.

FLAGS

E	Z	V	C	N
-	-	-	-	-

E **Not affected.**
Z **Not affected.**
V **Not affected.**
C **Not affected.**
N **Not affected.**

INSTRUCTION FORMAT

Μνεμονιχ	ΒΣΟ/Τασκινγ Μνεμονιχ	Οπερανδσ	Φορματ	Βψτεσ
PWRDN	**PWRDN**		**97 68 97 97**	**4**

ΡΕΤ ΡΕΤ

Ρετυρν φρομ Συβρουτινε

ΡΕΤ

OPERATION **(IP) ⇐ ((SP))**
(SP) ⇐ (SP) + 2

Returns from a subroutine. The IP is popped from the system stack. Execution resumes at the instruction following the CALL instruction in the calling routine.

FLAGS

E	Z	V	C	N
-	-	-	-	-

E	**Not affected.**
Z	**Not affected.**
V	**Not affected.**
C	**Not affected.**
N	**Not affected.**

INSTRUCTION FORMAT

Μνεμονιχ	ΒΣΟ/Τασκινγ Μνεμονιχ	Οπερανδσ	Φορματ	Βψτεσ
RET	**RET**		**CB 00**	**2**

ΡΕΤΙ ΡΕΤΙ

Ρετυρν ϕρομ Ιντερρυπτ Ρουτινε

ΡΕΤΙ

OPERATION

```
(IP) ⇐ ((SP))
(SP) ⇐ (SP) + 2
IF (SYSCON.SGTDIS=0) THEN
        (CSP) ⇐ ((SP))
        (SP) ⇐ (SP) + 2
END IF
(PSW) ⇐ ((SP))
(SP) ⇐ (SP) + 2
```

Returns from an interrupt routine. The PSW, IP, and CSP are popped off the system stack. Execution resumes at the instruction which had been interrupted. The previous system state is restored after the PSW has been popped. The CSP is only popped if segmentation is enabled. This is indicated by the SGTDIS bit in the SYSCON register.

FLAGS

E	Z	V	C	N
S	S	S	S	S

E	Restored from the PSW popped from the stack.
Z	Restored from the PSW popped from the stack.
V	Restored from the PSW popped from the stack.
C	Restored from the PSW popped from the stack.
N	Restored from the PSW popped from the stack.

INSTRUCTION FORMAT

Μνεμονιχ	ΒΣΟ/Τασκινγ Μνεμονιχ	Οπερανδσ	Φορματ	Βψτεσ
RETI	RET		FB 88	2

PETΠ PETΠ

Ρετυρν φρομ Συβρουτινε ανδ Ποπ Ωορδ

PETΠ οπ1

OPERATION (IP) ⇐ ((SP))
(SP) ⇐ (SP) + 2
(tmp) ⇐ ((SP))
(SP) ⇐ (SP) + 2
(op1) ⇐ (tmp)

DATA TYPES WORD

Returns from a subroutine. The IP is first popped from the system stack and then the next word is popped from the system stack into the operand specified by op1. Execution resumes at the instruction following the CALL instruction in the calling routine.

FLAGS

E	Z	V	C	N
*	*	-	-	-

E Set if the value of the word popped into operand op1 represents the lowest possible negative number. Cleared otherwise. Used to signal the end of a table.

Z Set if the value of the word popped into operand op1 equals zero. Cleared otherwise.

V Not affected.

C Not affected.

N Set if the most significant bit of the word popped into operand op1 is set. Cleared otherwise.

INSTRUCTION FORMAT

Μνεμονιχ	ΒΣΟ/Τασκινγ Μνεμονιχ	Οπερανδσ	Φορματ	Βψτεσ
RETP	RETP	reg	EB RR	2

ΡΕΤΣ ΡΕΤΣ

Ρετυρν φρομ Ιντερ–Σεγμεντ Συβρουτινε

ΡΕΤΣ

OPERATION (IP) ⇐ ((SP))
(SP) ⇐ (SP) + 2
(CSP) ⇐ ((SP))
(SP) ⇐ (SP) + 2

Returns from an inter-segment subroutine. The IP and CSP are popped from the system stack. Execution resumes at the instruction following the CALLS instruction in the calling routine.

FLAGS

E	Z	V	C	N
-	-	-	-	-

E Not affected.
Z Not affected.
V Not affected.
C Not affected.
N Not affected.

INSTRUCTION FORMAT

Μνεμονιχ	ΒΣΟ/Τασκινγ Μνεμονιχ	Οπερανδσ	Φορματ	Βψτεσ
RETS	RET		DB 00	2

ΡΟΛ ΡΟΛ

Ροτατε Λεφτ

ΡΟΛ οπ1, οπ2

OPERATION

```
(count) ⇐ (op2)
(C) ⇐ 0
DO WHILE count ≠ 0
        (C) ⇐ (op1$_{15}$)
        (op1$_{n}$) ⇐ (op1$_{n-1}$) n=1 to 15
        (op1$_{0}$) ⇐ (C)
        (count) ⇐ (count) - 1
END WHILE
```

DATA TYPES WORD

Rotates the destination word operand op1 left by as many times as specified by the source operand op2. Bit 15 is rotated into Bit 0 and into the Carry. Only shift values between 0 and 15 are allowed. When using a GPR as the count control, only the least significant 4 bits are used.

FLAGS

E	Z	V	C	N
0	*	0	S	*

E	Always cleared.
Z	Set if the result equals zero. Cleared otherwise.
V	Always cleared.
C	The Carry flag is set according to the last MSB shifted out of op1. Cleared for a rotate count of zero.
N	Set if the most significant bit of the result is set. Cleared otherwise.

INSTRUCTION FORMAT

Μνεμονιχ	ΒΣΟ/Τασκινγ Μνεμονιχ	Οπερανδσ	Φορματ	Βψτεσ
ROL	ROL	Rw_n,Rw_m	0C nm	2
ROL	ROL	Rw_n,#data$_4$	1C #n	2

ΡΟΡ ΡΟΡ

Ροτατε Ριγητ

ΡΟΡ οπ1, οπ2

OPERATION

```
$(count) \Leftarrow (op2)$
$(C) \Leftarrow 0$
$(V) \Leftarrow 0$
DO WHILE $count \neq 0$
    $(V) \Leftarrow (V) \vee (C)$
    $(C) \Leftarrow (op1_0)$
    $(op1_n) \Leftarrow (op1_{n+1}) n=0$ to 14
    $(op1_{15}) \Leftarrow (C)$
    $(count) \Leftarrow (count) - 1$
END WHILE
```

DATA TYPES **WORD**

Rotates the destination word operand op1 right by as many times as specified by the source operand op2. Bit 0 is rotated into Bit 15 and into the Carry. Only shift values between 0 and 15 are allowed. When using a GPR as the count control, only the least significant 4 bits are used.

FLAGS

E	Z	V	C	N
0	*	S	S	*

E	**Always cleared.**
Z	**Set if result equals zero. Cleared otherwise.**
V	**Set if in any cycle of the shift operation, a 1 is shifted out of the Carry flag. Cleared for a rotate count of zero.**
C	**The Carry flag is set according to the last LSB shifted out of op1. Cleared for a rotate count of zero.**
N	**Set if the most significant bit of the result is set. Cleared otherwise.**

INSTRUCTION FORMAT

Μνεμονιχ	ΒΣΟ/Τασκινγ Μνεμονιχ	Οπερανδσ	Φορματ	Βψτεσ
ROR	**ROR**	**Rw_n,Rw_m**	**2C nm**	**2**
ROR	**ROR**	**Rw_n,#$data_4$**	**3C #n**	**2**

ΣΧΞΤ ΣΧΞΤ

Σωιτχη Χοντεξτ

ΣΧΞΤ οπ1, οπ2

OPERATION **(tmp1)⇐ (op1)**
(tmp2)⇐ (op2)
(SP) ⇐ (SP) - 2
((SP)) ⇐ (tmp1)
(op1)⇐ (tmp2)

Used to switch contexts for any register. Switching context is a push and load operation. The contents of the register specified by the first operand, op1, are pushed onto the stack. That register is then loaded with the value specified by the second operand, op2.

FLAGS

E	Z	V	C	N
-	-	-	-	-

E **Not affected.**
Z **Not affected.**
V **Not affected.**
C **Not affected.**
N **Not affected.**

INSTRUCTION FORMAT

Μνεμονιχ	ΒΣΟ/Τασκινγ Μνεμονιχ	Οπερανδσ	Φορματ	Βψτεσ
SCXT	**SCXT**	**reg,#data$_{16}$**	**C6 RR ## ##**	**4**
SCXT	**SCXT**	**reg,mem**	**D6 RR MM MM**	**4**

ΣΗΛ ΣΗΛ

Σηιφτ Λεφτ

ΣΗΛ οπ1, οπ2

OPERATION

```
(count) ⇐ (op2)
(C) ⇐ 0
DO WHILE count ≠ 0
        (C) ⇐ $(op1_{15})$
        $(op1_{n})$ ⇐ $(op1_{n-1})$ n=1 to 15
        $(op1_{0})$ ⇐ 0
        (count) ⇐ (count) - 1
END WHILE
```

DATA TYPES WORD

Shifts the destination word operand op1 left by as many times as specified by the source operand op2. The least significant bits of the result are filled with zeros accordingly. The MSB is shifted into the Carry. Only shift values between 0 and 15 are allowed. When using a GPR as the count control, only the least significant 4 bits are used.

FLAGS

E	Z	V	C	N
0	*	0	S	*

E	Always cleared.
Z	Set if result equals zero. Cleared otherwise.
V	Always cleared.
C	The Carry flag is set according to the last MSB shifted out of op1. Cleared for a shift count of zero.
N	Set if the most significant bit of the result is set. Cleared otherwise.

INSTRUCTION FORMAT

Μνεμονιχ	ΒΣΟ/Τασκινγ Μνεμονιχ	Οπερανδσ	Φορματ	Βψτεσ
SHL	SHL	Rw_n,Rw_m	4C nm	2
SHL	SHL	Rw_n,#$data_4$	5C #n	2

ΣΗΡ ΣΗΡ

Σηιφτ Ριγητ

ΣΗΡ οπ1, οπ2

OPERATION

```
$(count) \Leftarrow (op2)$
$(C) \Leftarrow 0$
$(V) \Leftarrow 0$
DO WHILE $count \neq 0$
    $(V) \Leftarrow (C) \vee (V)$
    $(C) \Leftarrow (op1_0)$
    $(op1_n) \Leftarrow (op1_{n+1})$ n= 0 to 14
    $(op1_{15}) \Leftarrow 0$
    $(count) \Leftarrow (count) - 1$
END WHILE
```

DATA TYPES **WORD**

Shifts the destination word operand op1 right by as many times as specified by the source operand op2. The most significant bits of the result are filled with zeros. Accordingly. Since the bits shifted out effectively represent the remainder, the Overflow flag is used instead as a Rounding flag. This flag together with the Carry flag helps the user to determine whether the remainder bits lost were greater than, less than or equal to one half an LSB. Only shift values between 0 and 15 are allowed. When using a GPR as the count control, only the least significant 4 bits are used.

FLAGS

E	Z	V	C	N
0	*	S	S	*

E	Always cleared.
Z	Set if result equals zero. Cleared otherwise.
V	Set if in any cycle of the shift operation, a 1 is shifted out of the Carry flag. Cleared for a shift count of zero.
C	The Carry flag is set according to the last LSB bit shifted out of op1. Cleared for a shift count of zero.
N	Set if the most significant bit of the result is set. Cleared otherwise.

INSTRUCTION FORMAT

Μνεμονιχ	ΒΣΟ/Τασκινγ Μνεμονιχ	Οπερανδσ	Φορματ	Βψτεσ
SHR	SHR	Rw_n, Rw_m	6C nm	2
SHR	SHR	Rw_n,#$data_4$	7C #n	2

ΣΡΣΤ ΣΡΣΤ

Σοφτωαρε Ρεσετ

ΣΡΣΤ

OPERATION **Software Reset**

This instruction is used to perform a software reset. A software reset has the same effect on the microcontroller as an externally applied hardware reset. To insure that this instruction is not accidentally executed, it is implemented as a protected instruction.

FLAGS

E	Z	V	C	N
0	0	0	0	0

E	Always cleared.
Z	Always cleared.
V	Always cleared.
C	Always cleared.
N	Always cleared.

INSTRUCTION FORMAT

Μνεμονιχ	ΒΣΟ/Τασκινγ Μνεμονιχ	Φορματ	Βψτεσ
SRST	**SRST**	**B7 48 B7 B7**	**4**

ΣΡςΩΔΤ ΣΡςΩΔΤ

Σερϖιχε Ωατχηδογ Τιμερ

ΣΡςΩΔΤ

OPERATION **Service Watchdog Timer**

This instruction services the Watchdog Timer. It reloads the high order byte of the Watchdog Timer with a preset value and clears the low byte on every occurrence. Once this instruction has been executed, the watchdog timer cannot be disabled. To insure that this instruction is not accidentally executed, it is implemented as a protected instruction.

FLAGS

E	Z	V	C	N
-	-	-	-	-

E	Not affected.
Z	Not affected.
V	Not affected.
C	Not affected.
N	Not affected.

INSTRUCTION FORMAT

Μνεμονιχ	ΒΣΟ/Τασκινγ Μνεμονιχ	Φορματ	Βψτεσ
SRVWDT	**SRVWDT**	**A7 58 A7 A7**	**4**

ΣΥΒ ΣΥΒ

Ιντεγερ Συβτραχτιον

ΣΥΒ οπ1, οπ2

OPERATION (op1)⇐ (op1) - (op2)

DATA TYPES WORD

Performs a 2’s complement binary subtraction of the source operand specified by op2 from the destination operand specified by op1. The result is then stored in op1.

FLAGS

E	Z	V	C	N
*	*	*	S	*

E	Set if the value of op2 represents the lowest possible negative number. Cleared otherwise. Used to signal the end of a table.
Z	Set if result equals zero. Cleared otherwise.
V	Set if an arithmetic underflow occurred, i.e. the result can not be represented in the specified data type. Cleared otherwise.
C	Set if a borrow is generated. Cleared otherwise.
N	Set if the most significant bit of the result is set. Cleared otherwise.

INSTRUCTION FORMAT

Μνεμονιχ	ΒΣΟ/Τασκινγ Μνεμονιχ	Οπερανδσ	Φορματ	Βψτεσ
SUB	SUB	Rw_n,Rw_m	20 nm	2
SUB	SUB	Rw_n,#$data_3$	28 n:0###	2
SUB	SUB	reg,#$data_{16}$	26 RR ## ##	4
SUB	SUB	Rw_n,[Rw_i]	28 n:10ii	2
SUB	SUB	Rw_n,[Rw_i+]	28 n:11ii	2
SUB	SUB	reg,mem	22 RR MM MM	4
SUB	SUB	mem,reg	24 RR MM MM	4

ΣYBB ΣYBB

Ιντεγερ Συβτραχτιον

ΣYBB οπ1, οπ2

OPERATION **(op1)⇐ (op1) - (op2)**

DATA TYPES **BYTE**

Performs a 2's complement binary subtraction of the source operand specified by op2 from the destination operand specified by op1. The result is then stored in op1.

FLAGS

E	Z	V	C	N
*	*	*	S	*

E **Set if the value of op2 represents the lowest possible negative number. Cleared otherwise. Used to signal the end of a table.**

Z **Set if result equals zero. Cleared otherwise.**

V **Set if an arithmetic underflow occurred, i.e. the result can not be represented in the specified data type. Cleared otherwise.**

C **Set if a borrow is generated. Cleared otherwise.**

N **Set if the most significant bit of the result is set. Cleared otherwise.**

INSTRUCTION FORMAT

Μνεμονιχ	ΒΣΟ/Τασκινγ Μνεμονιχ	Οπερανδσ	Φορματ	Βψτεσ
SUBB	**SUB**	**Rb_n,Rbm**	**21 nm**	**2**
SUBB	**SUB**	**Rb_n,#$data_8$**	**29 n:0###**	**2**
SUBB	**SUB**	**reg,#$data_{16}$**	**27 RR ## ##**	**4**
SUBB	**SUB**	**Rb_n,[Rw_i]**	**29 n:10ii**	**2**
SUBB	**SUB**	**Rb_n,[Rw_i+]**	**29 n:11ii**	**2**
SUBB	**SUB**	**reg,mem**	**23 RR MM MM**	**4**
SUBB	**SUB**	**mem,reg**	**25 RR MM MM**	**4**

ΣΥΒΧ ΣΥΒΧ

Ιντεγερ Συβτραχτιον ωιτη Χαρρψ

ΣΥΒΧ οπ1, οπ2

OPERATION **(op1)⇐ (op1) - (op2) - (C)**

DATA TYPES **WORD**

Performs a 2’s complement binary subtraction of the source operand specified by op2 and the previously generated carry bit from the destination operand specified by op1. The result is then stored in op1. This instruction can be used to perform multiple precision arithmetic.

FLAGS

E	Z	V	C	N
*	S	*	S	*

E	**Set if the value of op2 represents the lowest possible negative number. Cleared otherwise. Used to signal the end of a table.**
Z	**Set if result equals zero and previous Z flag was set. Cleared otherwise.**
V	**Set if an arithmetic underflow occurred, i.e. the result can not be represented in the specified data type. Cleared otherwise.**
C	**Set if a borrow is generated. Cleared otherwise.**
N	**Set if the most significant bit of the result is set. Cleared otherwise.**

INSTRUCTION FORMAT

Μνεμονιχ	ΒΣΟ/Τασκινγ Μνεμονιχ	Οπερανδσ	Φορματ	Βψτεσ
SUBC	**SUBC**	**Rw$_n$,Rw$_m$**	**30 nm**	**2**
SUBC	**SUBC**	**Rw$_n$,#data$_3$**	**38 n:0###**	**2**
SUBC	**SUBC**	**reg,#data$_{16}$**	**36 RR ##**	**4**
SUBC	**SUBC**	**Rw$_n$,[Rw$_i$]**	**38 n:10ii**	**2**
SUBC	**SUBC**	**Rw$_n$,[Rw$_i$+]**	**38 n:11ii**	**2**
SUBC	**SUBC**	**reg,mem**	**32 RR MM MM**	**4**
SUBC	**SUBC**	**mem,reg**	**34 RR MM MM**	**4**

ΣΥΒΧΒ ΣΥΒΧΒ

Ιντεγερ Συβτραχτιον ωιτη Χαρρψ

ΣΥΒΧΒ οπ1, οπ2

OPERATION **(op1)⇐ (op1) - (op2) - (C)**

DATA TYPES **BYTE**

Performs a 2's complement binary subtraction of the source operand specified by op2 and the previously generated carry bit from the destination operand specified by op1. The result is then stored in op1. This instruction can be used to perform multiple precision arithmetic.

FLAGS

E	Z	V	C	N
*	S	*	S	*

- **E** **Set if the value of op2 represents the lowest possible negative number. Cleared otherwise. Used to signal the end of a table.**
- **Z** **Set if result equals zero and previous Z flag was set. Cleared otherwise.**
- **V** **Set if an arithmetic underflow occurred, i.e. the result can not be represented in the specified data type. Cleared otherwise.**
- **C** **Set if a borrow is generated. Cleared otherwise.**
- **N** **Set if the most significant bit of the result is set. Cleared otherwise.**

INSTRUCTION FORMAT

Μνεμονιχ	ΒΣΟ/Τασκινγ Μνεμονιχ	Οπερανδσ	Φορματ	Βψτεσ
SUBCB	**SUBC**	**Rb$_n$,Rbm**	**31 nm**	**2**
SUBCB	**SUBC**	**Rb$_n$,#data$_3$**	**39 n:0###**	**2**
SUBCB	**SUBC**	**reg,#data$_{16}$**	**37 RR ## ##**	**4**
SUBCB	**SUBC**	**Rb$_n$,[Rw$_i$]**	**39 n:10ii**	**2**
SUBCB	**SUBC**	**Rb$_n$,[Rw$_i$+]**	**39 n:11ii**	**2**
SUBCB	**SUBC**	**reg,mem**	**33 RR MM MM**	**4**
SUBCB	**SUBC**	**mem,reg**	**35 RR MM MM**	**4**

ΤΡΑΠ ΤΡΑΠ

Σοφτωαρε Τραπ

ΤΡΑΠ οπ1

OPERATION

```
(SP) ⇐ (SP) - 2
((SP)) ⇐ (PSW)
IF (SYSCON.SGTDIS = 0) THEN
        (SP) ⇐ (SP) - 2
        ((SP)) ⇐ (CSP)
        (CSP) ⇐ 0
END IF
(SP) ⇐ (SP) - 2
((SP)) ⇐ (IP)
(IP) ⇐ zero extend (op1 × 4)
```

Invokes a trap or interrupt routine based on the specified operand, op1. The invoked routine is determined by branching to the specified vector table entry point. This routine has no indication of whether it was called by software or hardware. System state is preserved identically to hardware interrupt entry except that the CPU priority level is not affected. The RETI, return from interrupt, instruction is used to resume execution after the trap or interrupt routine has completed. The CSP is pushed if segmentation is enabled.This is indicated by the SGTDIS bit in the SYSCON register.

FLAGS

E	Z	V	C	N
-	-	-	-	-

E	Not affected.
Z	Not affected.
V	Not affected.
C	Not affected.
N	Not affected.

INSTRUCTION FORMAT

Μνεμονιχ	ΒΣΟ/Τασκινγ Μνεμονιχ	Οπερανδσ	Φορματ	Βψτεσ
TRAP	**TRAP**	**#trap7**	**9B t:ttt0**	**2**

ΞOP ΞOP

Λογιχαλ Εξχλυσιϖε OP

ΞOP οπ1, οπ2

OPERATION **(op1)⇐ (op1)⊕ (op2)**

DATA TYPES **WORD**

Performs a bitwise logical EXCLUSIVE OR on each bit of the source operand specified by op2 and the destination operand specified by op1. The result is then stored in op1.

FLAGS

E	Z	V	C	N
*	*	0	0	*

E	**Set if the value of op2 represents the lowest possible negative number. Cleared otherwise. Used to signal the end of a table.**
Z	**Set if result equals zero. Cleared otherwise.**
V	**Always cleared.**
C	**Always cleared.**
N	**Set if the most significant bit of the result is set. Cleared otherwise.**

INSTRUCTION FORMAT

Μνεμονιχ	ΒΣΟ/Τασκινγ Μνεμονιχ	Οπερανδσ	Φορματ	Βψτεσ
XOR	**XOR**	**Rw_n,Rw_m**	**50 nm**	**2**
XOR	**XOR**	**Rw_n,#$data_3$**	**58 n:0###**	**2**
XOR	**XOR**	**reg,#$data_{16}$**	**56 RR ## ##**	**4**
XOR	**XOR**	**Rw_n,[Rw_i]**	**58 n:10ii**	**2**
XOR	**XOR**	**Rw_n,[Rw_i+]**	**58 n:11ii**	**2**
XOR	**XOR**	**reg,mem**	**52 RR MM MM**	**4**
XOR	**XOR**	**mem,reg**	**54 RR MM MM**	**4**

ΞΟΡΒ ΞΟΡΒ

Λογιχαλ Εξχλυσιϖε ΟΡ

ΞΟΡ οπ1, οπ2

OPERATION **(op1)⇐ (op1)⊕ (op2)**

DATA TYPES **BYTE**

Performs a bitwise logical EXCLUSIVE OR on each bit of the source operand specified by op2 and the destination operand specified by op1. The result is then stored in op1.

FLAGS

E	Z	V	C	N
*	*	0	0	*

E	**Set if the value of op2 represents the lowest possible negative number. Cleared otherwise. Used to signal the end of a table.**
Z	**Set if result equals zero. Cleared otherwise.**
V	**Always cleared.**
C	**Always cleared.**
N	**Set if the most significant bit of the result is set. Cleared otherwise.**

Μνεμονιχ	ΒΣΟ/Τασκινγ Μνεμονιχ	Οπερανδσ	Φορματ	Βψτεσ
XORB	**XOR**	**Rb$_n$,Rbm**	**51 nm**	**2**
XORB	**XOR**	**Rb$_n$,#data$_8$**	**59 n:0###**	**2**
XORB	**XOR**	**reg,#data$_{16}$**	**57 RR ## ##**	**4**
XORB	**XOR**	**Rb$_n$,[Rw$_i$]**	**59 n:10ii**	**2**
XORB	**XOR**	**Rb$_n$,[Rw$_i$+]**	**59 n:11ii**	**2**
XORB	**XOR**	**reg,mem**	**53 RR MM MM**	**4**
XORB	**XOR**	**mem,reg**	**55 RR MM MM**	**4**

APPENDIX B

ST10x166 REGISTERS

B. ST10x166 REGISTERS

This part of the Appendix contains a summary of all registers incorpored in the ST10x166. Section B.1 lists all CPU General Purpose Registers. In Section B.2, all ST10x166 Specific Special Function Registers are summarized and ordered by address, while Section B.3 lists all Special Function Registers in alphabetical order.

B.1 CPU GENERAL PURPOSE REGISTERS (GPRs)

CPU General Purpose Registers are accessed via the Context Pointer (CP). The Context Pointer must be programmed such that the accessed GPRs are always located in the internal RAM space. All GPRs are always located in the internal RAM space. All GPRs are bit addressable.

Word Registers

Name	Physical Address	8-Bit Address	Description	Reset Value
R0	**(CP) + 0**	**F0h**	**CPU General Purpose Register R0**	**XXXXh**
R1	**(CP) + 2**	**F1h**	**CPU General Purpose Register R1**	**XXXXh**
R2	**(CP) + 4**	**F2h**	**CPU General Purpose Register R2**	**XXXXh**
R3	**(CP) + 6**	**F3h**	**CPU General Purpose Register R3**	**XXXXh**
R4	**(CP) + 8**	**F4h**	**CPU General Purpose Register R4**	**XXXXh**
R5	**(CP) + 10**	**F5h**	**CPU General Purpose Register R5**	**XXXXh**
R6	**(CP) + 12**	**F6h**	**CPU General Purpose Register R6**	**XXXXh**
R7	**(CP) + 14**	**F7h**	**CPU General Purpose Register R7**	**XXXXh**
R8	**(CP) + 16**	**F8h**	**CPU General Purpose Register R8**	**XXXXh**
R9	**(CP) + 18**	**F9h**	**CPU General Purpose Register R9**	**XXXXh**
R10	**(CP) + 20**	**FAh**	**CPU General Purpose Register R10**	**XXXXh**
R11	**(CP) + 22**	**FBh**	**CPU General Purpose Register R11**	**XXXXh**
R12	**(CP) + 24**	**FCh**	**CPU General Purpose Register R12**	**XXXXh**
R13	**(CP) + 26**	**FDh**	**CPU General Purpose Register R13**	**XXXXh**
R14	**(CP) + 28**	**FEh**	**CPU General Purpose Register R14**	**XXXXh**
R15	**(CP) + 30**	**FFh**	**CPU General Purpose Register R15**	**XXXXh**

B. ST10x166 Registers

Byte Registers

Name	Physical Address	8-Bit Address	Description	Reset Value
RL0	**(CP) + 0**	**F0h**	**CPU General Purpose Register RL0**	**XXh**
RH0	**(CP) + 1**	**F1h**	**CPU General Purpose Register RH0**	**XXh**
RL1	**(CP) + 2**	**F2h**	**CPU General Purpose Register RL1**	**XXh**
RH1	**(CP) + 3**	**F3h**	**CPU General Purpose Register RH1**	**XXh**
RL2	**(CP) + 4**	**F4h**	**CPU General Purpose Register RL2**	**XXh**
RH2	**(CP) + 5**	**F5h**	**CPU General Purpose Register RH2**	**XXh**
RL3	**(CP) + 6**	**F6h**	**CPU General Purpose Register RL3**	**XXh**
RH3	**(CP) + 7**	**F7h**	**CPU General Purpose Register RH3**	**XXh**
RL4	**(CP) + 8**	**F8h**	**CPU General Purpose Register RL4**	**XXh**
RH4	**(CP) + 9**	**F9h**	**CPU General Purpose Register RH4**	**XXh**
RL5	**(CP) + 10**	**FAh**	**CPU General Purpose Register RL5**	**XXh**
RH5	**(CP) + 11**	**FBh**	**CPU General Purpose Register RH5**	**XXh**
RL6	**(CP) + 12**	**FCh**	**CPU General Purpose Register RL6**	**XXh**
RH6	**(CP) + 13**	**FDh**	**CPU General Purpose Register RH6**	**XXh**
RL7	**(CP) + 14**	**FEh**	**CPU General Purpose Register RL7**	**XXh**
RH7	**(CP) + 15**	**FFh**	**CPU General Purpose Register RH7**	**XXh**

SPECIAL FUNCTION REGISTERS Ordered by Address

Non-Bit Addressable Special Function Registers

Name	Physcial Address	8-Bit Address	Description	Reset Value
DPP0	**FE00h**	**00h**	**CPU Data Page Pointer 0 Register (4 bits)**	**0000h**
DPP1	**FE02h**	**01h**	**CPU Data Page Pointer 1 Register (4 bits)**	**0001h**
DPP2	**FE04h**	**02h**	**CPU Data Page Pointer 2 Register (4 bits)**	**0002h**
DPP3	**FE06h**	**03h**	**CPU Data Page Pointer 3 Register (4 bits)**	**0003h**
CSP	**FE08h**	**04h**	**CPU Code Segment Pointer Register (2 bits, read only)**	**0000h**
	FE0Ah	**05h**	**(reserved)**	
MDH	**FE0Ch**	**06h**	**CPU Multiply/Divide Register - High Word**	**0000h**
MDL	**FE0Eh**	**07h**	**CPU Multiply/Divide Register - Low Word**	**0000h**
CP	**FE10h**	**08h**	**CPU Context Pointer Register**	**FC00h**
SP	**FE12h**	**09h**	**CPU System Stack Pointer Register**	**FC00h**
STKOV	**FE14h**	**0Ah**	**CPU Stack Overflow Pointer Register**	**FA00h**
STKUN	**FE16h**	**0Bh**	**CPU Stack Underflow Pointer Register**	**FC00h**
ADDRSEL1	**FE18h**	**0Ch**	**Address Select Register**	**0000h**
	•	•	•	
	•	•	•	
	FE3Eh	**1Fh**	**(reserved)**	
T2	**FE40h**	**20h**	**GPT1 Timer 2 Register**	**0000h**
T3	**FE42h**	**21h**	**GPT1 Timer 3 Register**	**0000h**
T4	**FE44h**	**22h**	**GPT1 Timer 4 Register**	**0000h**
T5	**FE46h**	**23h**	**GPT2 Timer 5 Register**	**0000h**
T6	**FE48h**	**24h**	**GPT2 Timer 6 Register**	**0000h**
CAPREL	**FE4Ah**	**25h**	**GPT2 Capture/Reload Register**	**0000h**
	FE4Ch	**26h**	**(reserved)**	
	FE4Eh	**27h**	**(reserved)**	

Name	Physical Address	8-Bit Address	Description	Reset Value
T0	**FE50h**	**28h**	**CAPCOM Timer 0 Register**	**0000h**
T1	**FE52h**	**29h**	**CAPCOM Timer 1 Register**	**0000h**
T0REL	**FE54h**	**2Ah**	**CAPCOM Timer 0 Reload Register**	**0000h**
T1REL	**FE56h**	**2Bh**	**CAPCOM Timer 1 Reload Register**	**0000h**
	FE58h	**2Ch**	**(reserved)**	
	•	•	•	
	•	•	•	
	FE7Eh	**3Fh**	**(reserved)**	
CC0	**FE80h**	**40h**	**CAPCOM Register 0**	**0000h**
CC1	**FE82h**	**41h**	**CAPCOM Register 1**	**0000h**
CC2	**FE84h**	**42h**	**CAPCOM Register 2**	**0000h**
CC3	**FE86h**	**43h**	**CAPCOM Register 3**	**0000h**
CC4	**FE88h**	**44h**	**CAPCOM Register 4**	**0000h**
CC5	**FE8Ah**	**45h**	**CAPCOM Register 5**	**0000h**
CC6	**FE8Ch**	**46h**	**CAPCOM Register 6**	**0000h**
CC7	**FE8Eh**	**47h**	**CAPCOM Register 7**	**0000h**
CC8	**FE90h**	**48h**	**CAPCOM Register 8**	**0000h**
CC9	**FE92h**	**49h**	**CAPCOM Register 9**	**0000h**
CC10	**FE94h**	**4Ah**	**CAPCOM Register 10**	**0000h**
CC11	**FE96h**	**4Bh**	**CAPCOM Register 11**	**0000h**
CC12	**FE98h**	**4Ch**	**CAPCOM Register 12**	**0000h**
CC13	**FE9Ah**	**4Dh**	**CAPCOM Register 13**	**0000h**
CC14	**FE9Ch**	**4Eh**	**CAPCOM Register 14**	**0000h**
CC15	**FE9Eh**	**4Fh**	**CAPCOM Register 15**	

Name	Physical Address	8-Bit Address	Description	Reset Value
ADDAT	**FEA0h**	**50h**	**A/D Converter Result Register**	**0000h**
	FEA2h	**51h**	**(reserved)**	
	•	ù	•	
	•	ù	•	
	FEACh	**56h**	**(reserved)**	
WDT	**FEAEh**	**57h**	**Watchdog Timer Register (read only)**	**0000h**
S0TBUF	**FEB0h**	**58h**	**Serial Channel 0 Transmit Buffer Register (write only)**	**0000h**
S0RBUF	**FEB2h**	**59h**	**Serial Channel 0 Receive Buffer Register (read only)**	**XXXXh**
S0BG	**FEB4h**	**5Ah**	**Serial Channel 0 Baud Rate Generator/ Reload Register**	**0000h**
	FEB6h	**5Bh**	**(reserved)**	
S1TBUF	**FEB8h**	**5Ch**	**Serial Channel 1 Transmit Buffer Register (write only)**	**0000h**
S1RBUF	**FEBAh**	**5Dh**	**Serial Channel 1 Receive Buffer Register (read only)**	**XXXXh**
S1BG	**FEBCh**	**5Eh**	**Serial Channel 1 Baud Rate (Generator/ Reload Register**	**0000h**
	FEBEh	**5Fh**	**(reserved)**	
PECC0	**FEC0h**	**60h**	**PEC Channel 0 Control Register**	**0000h**
PECC1	**FEC2h**	**61h**	**PEC Channel 1 Control Register**	**0000h**
PECC2	**FEC4h**	**62h**	**PEC Channel 2 Control Register**	**0000h**
PECC3	**FEC6h**	**63h**	**PEC Channel 3 Control Register**	**0000h**
PECC4	**FEC8h**	**64h**	**PEC Channel 4 Control Register**	**0000h**
PECC5	**FECAh**	**65h**	**PEC Channel 5 Control Register**	**0000h**
PECC6	**FECCh**	**66h**	**PEC Channel 6 Control Register**	**0000h**
PECC7	**FECEh**	**67h**	**PEC Channel 7 Control Register**	**0000h**
	FED0h	**68h**	**(reserved)**	
	•	ù	•	
	•	ù	•	
	FEFEh	**7Fh**	**(reserved)**	

Bit Addressable Special Function Registers

Name	Physical Address	8-Bit Address	Description	Reset Value
P0	**FF00h**	**80h**	**Port 0 Register**	**0000h**
DP0	**FF02h**	**81h**	**Port 0 Direction Control Register**	**0000h**
P1	**FF04h**	**82h**	**Port 1 Register**	**0000h**
DP1	**FF06h**	**83h**	**Port 1 Direction Control Register**	**0000h**
P4	**FF08h**	**84h**	**Port 4 Register (2 Bits)**	**0000h**
DP4	**FF0Ah**	**85h**	**Port 4 Direction Control Register (2 Bits)**	**0000h**
SYSCON	**FF0Ch**	**86h**	**CPU System Configuration Register** *** system configuration selected during reset**	**0XX0h***
MDC	**FF0Eh**	**87h**	**CPU Multiply/Divide Control Register**	**0000h**
PSW	**FF10h**	**88h**	**CPU Program Status Word**	**0000h**
	FF12h	**89h**	**(reserved)**	
BUSCON1	**FF14h**	**8Ah**	**Bus Configuration Register**	**0000h**
	•	•	•	
	•	•	•	
	FF1Ah	**8Dh**	**(reserved)**	
ZEROS	**FF1Ch**	**8Eh**	**Constant Value 0’s Register (read only)**	**0000h**
ONES	**FF1Eh**	**8Fh**	**Constant Value 1’s Register (read only)**	**FFFFh**
	FF20h	**90h**	**(reserved)**	
	•	•	•	
	•	•	•	
	FF3Eh	**9Fh**	**(reserved)**	

Name	Physical Address	8-Bit Address	Description	Reset Value
T2CON	**FF40h**	**A0h**	**GPT1 Timer 2 Control Register**	**0000h**
T3CON	**FF42h**	**A1h**	**GPT1 Timer 3 Control Register**	**0000h**
T4CON	**FF44h**	**A2h**	**GPT1 Timer 4 Control Register**	**0000h**
T5CON	**FF46h**	**A3h**	**GPT1 Timer 5 Control Register**	**0000h**
T6CON	**FF48h**	**A4h**	**GPT1 Timer 6 Control Register**	**0000h**
	FF4Ah	**A5h**	**(reserved)**	
	FF4Ch	**A6h**	**(reserved)**	
	FF4Eh	**A7h**	**(reserved)**	
T01CON	**FF50h**	**A8h**	**CAPCOM Timer 0 and Timer 1 Control Register**	**0000h**
CCM0	**FF52h**	**A9h**	**CAPCOM Mode Control Register 0**	**0000h**
CCM1	**FF54h**	**AAH**	**CAPCOM Mode Control Register 1**	**0000h**
CCM2	**FF56h**	**ABh**	**CAPCOM Mode Control Register 2**	**0000h**
CCM3	**FF58h**	**ACh**	**CAPCOM Mode Control Register 3**	**0000h**
	FF5Ah	**ADh**	**(reserved)**	
	FF5Ch	**AEh**	**(reserved)**	
	FF5Eh	**AFh**	**(reserved)**	
T2IC	**FF60h**	**B0h**	**GPT1 Timer 2 Interrupt Control Register**	**0000h**
T3IC	**FF62h**	**B1h**	**GPT1 Timer 3 Interrupt Control Register**	**0000h**
T4IC	**FF64h**	**B2h**	**GPT1 Timer 4 Interrupt Control Register**	**0000h**
T5IC	**FF66h**	**B3h**	**GPT2 Timer 5 Interrupt Control Register**	**0000h**
T6IC	**FF68h**	**B4h**	**GPT2 Timer 6 Interrupt Control Register**	**0000h**
CRIC	**FF6Ah**	**B5h**	**GPT2 CAPREL Interrupt Control Register**	**0000h**

Name	Physical Address	8-Bit Address	Description	Reset Value
S0TIC	**FF6Ch**	**B6h**	**Serial Channel 0 Transmit Interrupt Control Register**	**0000h**
S0RIC	**FF6Eh**	**B7h**	**Serial Channel 0 Receive Interrupt Control Register**	**0000h**
S0EIC	**FF70h**	**B8h**	**Serial Channel 0 Error Interrupt Control Register**	**0000h**
S1TIC	**FF72h**	**B9h**	**Serial Channel 1 Transmit Interrupt Control Register**	**0000h**
S1RIC	**FF74h**	**BAh**	**Serial Channel 1 Receive Interrupt Control Register**	**0000h**
S1EIC	**FF76h**	**BBh**	**Serial Channel 1 Error Interrupt Control Register**	**0000h**
CC0IC	**FF78h**	**BCh**	**CAPCOM Register 0 Interrupt Control Register**	**0000h**
CC1IC	**FF7Ah**	**BDh**	**CAPCOM Register 1 Interrupt Control Register**	**0000h**
CC2IC	**FF7Ch**	**BEh**	**CAPCOM Register 2 Interrupt Control Register**	**0000h**
CC3IC	**FF7Eh**	**BFh**	**CAPCOM Register 3 Interrupt Control Register**	**0000h**
CC4IC	**FF80h**	**C0h**	**CAPCOM Register 4 Interrupt Control Register**	**0000h**
CC5IC	**FF82h**	**C1h**	**CAPCOM Register 5 Interrupt Control Register**	**0000h**
CC6IC	**FF84h**	**C2h**	**CAPCOM Register 6 Interrupt Control Register**	**0000h**
CC7IC	**FF86h**	**C3h**	**CAPCOM Register 7 Interrupt Control Register**	**0000h**
CC8IC	**FF88h**	**C4h**	**CAPCOM Register 8 Interrupt Control Register**	**0000h**
CC9IC	**FF8Ah**	**C5h**	**CAPCOM Register 9 Interrupt Control Register**	**0000h**
CC10IC	**FF8Ch**	**C6h**	**CAPCOM Register 10 Interrupt Control Register**	**0000h**
CC11IC	**FF8Eh**	**C7h**	**CAPCOM Register 11 Interrupt Control Register**	**0000h**
CC12IC	**FF90h**	**C8h**	**CAPCOM Register 12 Interrupt Control Register**	**0000h**
CC13IC	**FF92h**	**C9h**	**CAPCOM Register 13 Interrupt Control Register**	**0000h**
CC14IC	**FF94h**	**CAh**	**CAPCOM Register 14 Interrupt Control Register**	**0000h**
CC15IC	**FF96h**	**CBh**	**CAPCOM Register 15 Interrupt Control Register**	**0000h**

Name	Physical Address	8-Bit Address	Description	Reset Value
ADCIC	**FF98h**	**CCh**	**A/D Converter End of Conversion Interrupt Control Register**	**0000h**
ADEIC	**FF9Ah**	**CDh**	**A/D Converter Overrun Error Interrupt Control Register**	**0000h**
T0IC	**FF9Ch**	**CEh**	**CAPCOM TImer 0 Interrupt Control Register**	**0000h**
T1IC	**FF9Eh**	**CFh**	**CAPCOM Timer 1 Interrupt Control Register**	**0000h**
ADCON	**FFA0h**	**D0h**	**A/D Converter Control Register**	**0000h**
P5	**FFA2h**	**D1h**	**Port 5 Register (10 Bits, read only)**	**XXXXh**
	FFA4h	**D2h**	**(reserved)**	
	•	•	•	
	•	•	•	
	FFAAh	**D5h**	**(reserved)**	
TFR	**FFACh**	**D6h**	**Trap Flag Register**	**0000h**
WDTCON	**FFAEh**	**D7h**	**Watchdog Timer Control Register** **for Watchdog Timer overflow**	**0000h** **0002h**

Name	Physical Address	8-Bit Address	Description	Reset Value
S0CON	**FFB0h**	**D8h**	**Serial Channel 0 Control Register**	**0000h**
	FFB2h	**D9h**	**(reserved)**	
	FFB4h	**DAh**	**(reserved)**	
	FFB6h	**DBh**	**(reserved)**	
S1CON	**FFB8h**	**DCh**	**Serial Channel 1 Control Register**	**0000h**
	FFBAh	**DDh**	**(reserved)**	
	FFBCh	**DEh**	**(reserved)**	
	FFBEh	**DFh**	**(reserved)**	
P2	**FFC0h**	**E0h**	**Port 2 Register**	**0000h**
DP2	**FFC2h**	**E1h**	**Port 2 Direction Control Register**	**0000h**
P3	**FFC4h**	**E2h**	**Port 3 Register**	**0000h**
DP3	**FFC6h**	**E3h**	**Port 3 Direction Control Register**	**0000h**
	FFC8h	**E4h**	**(reserved)**	
	•	•	**ù**	
	•	**ù**	•	
	FFDEh	**EFh**	**(reserved)**	

SPECIAL FUNCTION REGISTERS - ALPHABETICAL ORDER

The following table lists all SFRs which are implemented in the ST10x166 in alphabetical order.

Bit addressable SFRs are marked with the letter "b" in column "Name".

Name		Physical Address	8-Bit Address	Description	Reset Value
ADCIC	**b**	**FF98h**	**CCh**	**A/D Converter End of Conversion Interrupt Control Register**	**0000h**
ADCON	**b**	**FFA0h**	**D0h**	**A/D Converter Control Register**	**0000h**
ADDAT		**FEA0h**	**50h**	**A/D Converter Result Register**	**0000h**
ADDRSEL1		**FE18h**	**0Ch**	**Address Select Register**	**0000h**
ADEIC	**b**	**FF9Ah**	**CDh**	**A/D Converter Overrun Error Interrupt Control Register**	**0000h**
BUSCON1	**b**	**FF14h**	**8Ah**	**Bus Configuration Register**	**0000h**
CAPREL		**FE4Ah**	**25h**	**GPT2 Capture/Reload Register**	**0000h**
CC0		**FE80h**	**40h**	**CAPCOM Register 0**	**0000h**
CC0IC	**b**	**FF78h**	**BCh**	**CAPCOM Register 0 Interrupt Control Register**	**0000h**
CC1		**FE82h**	**41h**	**CAPCOM Register 1**	**0000h**
CC1IC	**b**	**FF7Ah**	**BDh**	**CAPCOM Register 1 Interrupt Control Register**	**0000h**
CC2		**FE84h**	**42h**	**CAPCOM Register 2**	**0000h**
CC2IC	**b**	**FF7Ch**	**BEh**	**CAPCOM Register 2 Interrupt Control Register**	**0000h**
CC3		**FE86h**	**43h**	**CAPCOM Register 3**	**0000h**
CC3IC	**b**	**FF7Eh**	**BFh**	**CAPCOM Register 3 Interrupt Control Register**	**0000h**
CC4		**FE88h**	**44h**	**CAPCOM Register 4**	**0000h**
CC4IC	**b**	**FF80h**	**C0h**	**CAPCOM Register 4 Interrupt Control Register**	**0000h**

Name	Physical Address	8-Bit Address	Description	Reset Value
CC5	**FE8Ah**	**45h**	**CAPCOM Register 5**	**0000h**
CC5IC b	**FF82h**	**C1h**	**CAPCOM Register 5 Interrupt Control Register**	**0000h**
CC6	**FE8Ch**	**46h**	**CAPCOM Register 6**	**0000h**
CC6IC b	**FF84h**	**C2h**	**CAPCOM Register 6 Interrupt Control Register**	**0000h**
CC7	**FE8Eh**	**47h**	**CAPCOM Register 7**	**0000h**
CC7IC b	**FF86h**	**C3h**	**CAPCOM Register 7 Interrupt Control Register**	**0000h**
CC8	**FE90h**	**48h**	**CAPCOM Register 8**	**0000h**
CC8IC b	**FF88h**	**C4h**	**CAPCOM Register 8 Interrupt Control Register**	**0000h**
CC9	**FE92h**	**49h**	**CAPCOM Register 9**	**0000h**
CC9IC b	**FF8Ah**	**C5h**	**CAPCOM Register 9 Interrupt Control Register**	**0000h**
CC10	**FE94h**	**4Ah**	**CAPCOM Register 10**	**0000h**
CC10IC b	**FF8Ch**	**C6h**	**CAPCOM Register 10 Interrupt Control Register**	**0000h**
CC11	**FE96h**	**4Bh**	**CAPCOM Register 11**	**0000h**
CC11IC b	**FF8Eh**	**C7h**	**CAPCOM Register 11 Interrupt Control Register**	**0000h**
CC12	**FE98h**	**4Ch**	**CAPCOM Register 12**	**0000h**
CC12IC b	**FF90h**	**C8h**	**CAPCOM Register 12 Interrupt Control Register**	**0000h**
CC13	**FE9Ah**	**4Dh**	**CAPCOM Register 13**	**0000h**
CC13IC b	**FF92h**	**C9h**	**CAPCOM Register 13 Interrupt Control Register**	**0000h**

Name		Physical Address	8-Bit Address	Description	Reset Value
CC14		**FE9Ch**	**4Eh**	**CAPCOM Register 14**	**0000h**
CC14IC	**b**	**FF94h**	**CAh**	**CAPCOM Register 14 Interrupt Control Register**	**0000h**
CC15		**FE9Eh**	**4Fh**	**CAPCOM Register 15**	**0000h**
CC15IC	**b**	**FF96h**	**CBh**	**CAPCOM Register 15 Interrupt Control Register**	**0000h**
CCM0	**b**	**FF52h**	**A9h**	**CAPCOM Mode Control Register 0**	**0000h**
CCM1	**b**	**FF54h**	**AAh**	**CAPCOM Mode Control Register 1**	**0000h**
CCM2	**b**	**FF56h**	**ABh**	**CAPCOM Mode Control Register 2**	**0000h**
CCM3	**b**	**FF58h**	**ACh**	**CAPCOM Mode Control Register 3**	**0000h**
CP		**FE10h**	**08h**	**CPU Context Pointer Register**	**FC00h**
CRIC	**b**	**FF6Ah**	**B5h**	**GPT2 CAPREL Interrupt Control Register**	**0000h**
CSP		**FE08h**	**04h**	**CPU Code Segment Pointer Register (2 Bits, read only)**	**0000h**
DP0	**b**	**FF02h**	**81h**	**Port 0 Direction Control Register**	**0000h**
DP1	**b**	**FF06h**	**83h**	**Port 1 Direction Control Register**	**0000h**
DP2	**b**	**FFC2h**	**E1h**	**Port 2 Direction Control Register**	**0000h**
DP3	**b**	**FFC6h**	**E3h**	**Port 3 Direction Control Register**	**0000h**
DP4	**b**	**FF0Ah**	**85h**	**Port 4 Direction Control Register (2 Bits)**	**0000h**
DPP0		**FE00h**	**00h**	**CPU Data Page Pointer 0 Register (4 Bits)**	**0000h**
DPP1		**FE02h**	**01h**	**CPU Data Page Pointer 1 Register (4 Bits)**	**0001h**
DPP2		**FE04h**	**02h**	**CPU Data Page Pointer 2 Register (4 Bits)**	**0002h**
DPP3		**FE06h**	**03h**	**CPU Data Page Pointer 3 Register (4 Bits)**	**0003h**
MDC	**b**	**FF0Eh**	**87h**	**CPU Multiply/Divide Control Register**	**0000h**
MDH		**FE0Ch**	**06h**	**CPU Multiply/Divide Register - High Word**	**0000h**
MDL		**FE0Eh**	**07h**	**CPU Multiply/Divide Register - Low Word**	**0000h**
ONES	**b**	**FF1Eh**	**8Fh**	**Constant Value 1’s Register (read only)**	**FFFFh**

Name		Physical Address	8-Bit Address	Description	Reset Value
P0	**b**	**FF00h**	**80h**	**Port 0 Register**	**0000h**
P1	**b**	**FF04h**	**82h**	**Port 1 Register**	**0000h**
P2	**b**	**FFC0h**	**E0h**	**Port 2 Register**	**0000h**
P3	**b**	**FFC4h**	**E2h**	**Port 3 Register**	**0000h**
P4	**b**	**FF08h**	**84h**	**Port 4 Register (2 Bits)**	**0000h**
P5	**b**	**FFA2h**	**D1h**	**Port 5 Register (10 Bits, read only)**	**XXXXh**
PECC0		**FEC0h**	**60h**	**PEC Channel 0 Control Register**	**0000h**
PECC1		**FEC2h**	**61h**	**PEC Channel 1 Control Register**	**0000h**
PECC2		**FEC4h**	**62h**	**PEC Channel 2 Control Register**	**0000h**
PECC3		**FEC6h**	**63h**	**PEC Channel 3 Control Register**	**0000h**
PECC4		**FEC8h**	**64h**	**PEC Channel 4 Control Register**	**0000h**
PECC5		**FECAh**	**65h**	**PEC Channel 5 Control Register**	**0000h**
PECC6		**FECCh**	**66h**	**PEC Channel 6 Control Register**	**0000h**
PECC7		**FECEh**	**67h**	**PEC Channel 7 Control Register**	**0000h**
PSW	**b**	**FF10h**	**88h**	**CPU Program Status Word**	**0000h**
S0BG		**FEB4h**	**5Ah**	**Serial Channel 0 Baud Rate Generator/ Reload Register**	**0000h**
S0CON	**b**	**FFB0h**	**D8h**	**Serial Channel 0 Control Register**	**0000h**
S0EIC	**b**	**FF70h**	**B8h**	**Serial Channel 0 Error Interrupt Control Register**	**0000h**
S0RBUF		**FEB2h**	**59**	**Serial Channel 0 Receive Buffer Register (read only)**	**XXXXh**
S0RIC	**b**	**FF6Eh**	**B7h**	**Serial Channel 0 Receive Interrupt Control Register**	**0000h**
S0TBUF		**FEB0h**	**58h**	**Serial Channel 0 Transmit Buffer Register (write only)**	**0000h**
S0TIC	**b**	**FF6Ch**	**B6h**	**Serial Channel 0 Transmit Interrupt Control Register**	**0000h**

Name		Physical Address	8-Bit Address	Description	Reset Value
S1BG		**FEBCh**	**5Eh**	**Serial Channel 1 Baud Rate Generator/ Reload Register**	**0000h**
S1CON	**b**	**FFB8h**	**DCh**	**Serial Channel 1 Control Register**	**0000h**
S1EIC	**b**	**FF76h**	**BBh**	**Serial Channel 1 Error Interrupt Control Register**	**0000h**
S1RBUF		**FEBAh**	**5Dh**	**Serial Channel 1 Receive Buffer Register (read only)**	**XXXXh**
S1RIC	**b**	**FF74h**	**BAh**	**Serial Channel 1 Receive Interrupt Control Register**	**0000h**
S1TBUF		**FEB8h**	**5Ch**	**Serial Channel 1 Transmit Buffer Register (write only)**	**0000h**
S1TIC	**b**	**FF72h**	**B9h**	**Serial Channel 1 Transmit Interrupt Control Register**	**0000h**
SP		**FE12h**	**09h**	**CPU System Stack Pointer Register**	**FC00h**
STKOV		**FE14h**	**0Ah**	**CPU Stack Overflow Pointer Register**	**FA00h**
STKUN		**FE16h**	**0Bh**	**CPU Stack Underflow Pointer Register**	**FC00h**
SYSCON	**b**	**FF0Ch**	**86h**	**CPU System Configuration Register** *** system configuration selected during reset**	**0XX0h***
T0		**FE50h**	**28h**	**CAPCOM Timer 0 Register**	**0000h**
T01CON	**b**	**FF50h**	**A8h**	**CAPCOM Timer 0 and Timer 1 Control Register**	**0000h**
T0IC	**b**	**FF9Ch**	**CEh**	**CAPCOM Timer 0 Interrupt Control Register**	**0000h**
T0REL		**FE54h**	**2Ah**	**CAPCOM Timer 0 Reload Register**	**0000h**
T1		**FE52h**	**29h**	**CAPCOM Timer 1 Register**	**0000h**
T1IC	**b**	**FF9Eh**	**CFh**	**CAPCOM Timer 1 Interrupt Control Register**	**0000h**
T1REL		**FE56h**	**2Bh**	**CAPCOM Timer 1 Reload Register**	**0000h**

Name		Physical Address	8-Bit Address	Description	Reset Value
T2		**FE40h**	**20h**	**GPT1 Timer 2 Register**	**0000h**
T2CON	**b**	**FF40h**	**A0h**	**GPT1 Timer 2 Control Register**	**0000h**
T2IC	**b**	**FF60h**	**B0h**	**GPT1 Timer 2 Interrupt Control Register**	**0000h**
T3		**FE42h**	**21h**	**GPT1 Timer 3 Register**	**0000h**
T3CON	**b**	**FF42h**	**A1h**	**GPT1 Timer 3 Control Register**	**0000h**
T3IC	**b**	**FF62h**	**B1h**	**GPT1 Timer 3 Interrupt Control Register**	**0000h**
T4		**FE44h**	**22h**	**GPT1 Timer 4 Register**	**0000h**
T4CON	**b**	**FF44h**	**A2h**	**GPT1 Timer 4 Control Register**	**0000h**
T4IC	**b**	**FF64h**	**B2h**	**GPT1 Timer 4 Interrupt Control Register**	**0000h**
T5		**FE46h**	**23h**	**GPT1 Timer 5 Register**	**0000h**
T5CON	**b**	**FF46h**	**A3h**	**GPT1 Timer 5 Control Register**	**0000h**
T5IC	**b**	**FF66h**	**B3h**	**GPT1 Timer 5 Interrupt Control Register**	**0000h**
T6		**FE48h**	**24h**	**GPT2 Timer 6 Register**	**0000h**
T6CON	**b**	**FF48h**	**A4h**	**GPT2 Timer 6 Control Register**	**0000h**
T6IC	**b**	**FF68h**	**B4h**	**GPT2 Timer 6 Interrupt Control Register**	**0000h**
TFR	**b**	**FFACh**	**D6h**	**Trap Flag Register**	**0000h**
WDT		**FEAEh**	**57h**	**Watchdog Timer Register (read only)**	**0000h**
WDTCON	**b**	**FFAEh**	**D7h**	**Watchdog Timer Control Register** **for Watchdog Timer overflow**	**0000h** **0002h**
ZEROS	**b**	**FF1Ch**	**8Eh**	**Constant Value 0’s Register (read only)**	**0000h**

APPENDIX C

APPLICATION EXAMPLE

C. APPLICATION EXAMPLE

This portion of the appendix is subdivided into two sections. Section C.1 shows examples for the use of different types of memories connected to the ST10x166 in different external bus configurations. Section C.2 contains formulas, tables and examples for programming the ST10x166 wait states described in detail in section 9.7.

C.1 EXTERNAL BUS AND MEMORY CONFIGURATIONS

A description of the possible ST10x166 external bus configuration modes which are determined by the state of the EBC1, EBC0 and $\overline{BUSACT}$ input pins during reset can be found in chapter 9. Note that the following examples refer to the non-segmented memory model which supports only 64Kbytes of memory space. Thus, port pins P4.1 and P4.0 are not required as outputs of additional segment address bits (A17 and A16).

1) 16-bit Addresses, 8-bit Data, Multiplexed Bus
(External RAM/ROM: Byte-Organized Memories)

This configuration is shown in figure C.1. An external memory is implemented by a 32Kx8 EPROM and an 8Kx8 RAM. The connected external bus is used for both 16-bit addresses and 8-bit data. Because of time-multiplexing, an external address latch is required for the lower byte of the address.

2) 16-bit Addresses, 8-bit Data, Non-Multiplexed Buses
(External RAM/ROM: Byte-Organized Memories)

This configuration is shown in figure C.2. The external memory is implemented by a 32Kx8 EPROM and an 8Kx8 RAM. Because two separate 8-bit Data and 16-bit Address buses are used, no external address latch is required.

3) 16-bit Addresses, 16-bit Data, Multiplexed Bus
(External RAM/ROM: Both Word- and Byte-Organized Memories)

This configuration is shown in figure C.3. The external memory is implemented by one 32Kx16 EPROM and by two 8Kx8 RAMs. The connected external bus is used for both 16-bit addresses and 16-bit data. Because of time-multiplexing, two external address latches are required. The EPROM can only be accessed wordwise, while the RAMs can also be accessed bytewise, provided that the function of the $\overline{BHE}$ output pin is not disabled. In this case, the address signal A0 selects the lower byte memory and the active low $\overline{BHE}$ signal selects the upper byte memory.

4) 16-bit Addresses, 16-bit Data, Non-Multiplexed Buses
(External RAM/ROM: Both Word- and Byte-Organized Memories)

This configuration shown in figure C.4 is the fastest external memory access mode. The external memory is implemented by one 32Kx16 EPROM and by two 8Kx8 RAMs. Because two separate 16-bit data and 16-bit address buses are used, no external address latch is required. The EPROM can only be accessed wordwise, while the RAMs can also be accessed bytewise, provided that the function of the $\overline{BHE}$ output pin is not disabled. In this case, the address signal A0 selects the lower byte memory and the active low $\overline{BHE}$ signal selects the upper byte memory.

Figure C-1. 16-Bit Addresses, 8-Bit Data, Multiplexed Bus Configuration

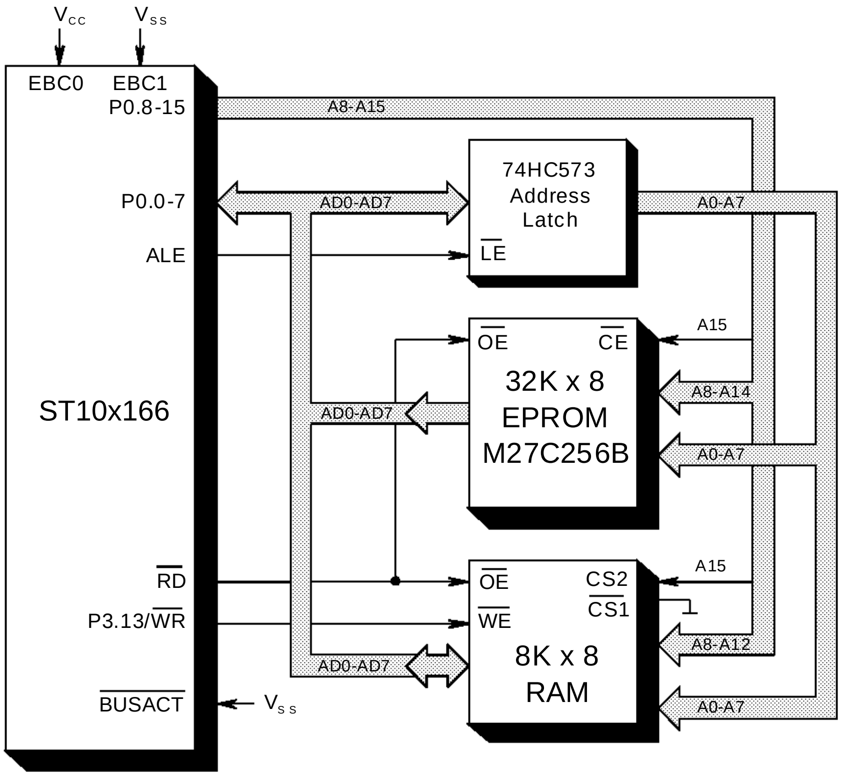
V_{CC}
V_{SS}
EBC0
EBC1
P0.8-15
P0.0-7
ALE
ST10x166
RD
P3.13/WR
BUSACT
V_{SS}
A8-A15
AD0-AD7
74HC573
Address
Latch
LE
A0-A7
OE
CE
A15
32K x 8
EPROM
M27C256B
A8-A14
AD0-AD7
A0-A7
OE
CS2
CS1
A15
WE
8K x 8
RAM
A8-A12
AD0-AD7
A0-A7

Example with Byte-Organized Memory Devices (Data Multiplexed)   VR001646

Figure C-2. 16-Bit Addresses, 8-Bit Data, Non-Multiplexed Bus Configuration

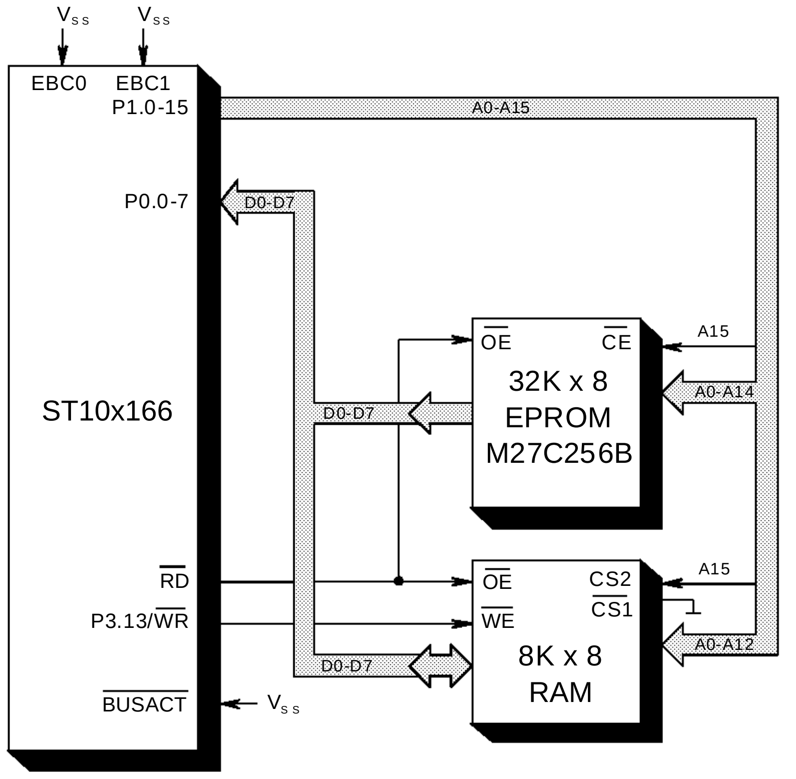
V_SS
V_SS
EBC0
EBC1
P1.0-15
A0-A15
P0.0-7
D0-D7
ST10x166
OE
CE
A15
32K x 8
EPROM
M27C256B
A0-A14
D0-D7
RD
P3.13/WR
OE
WE
CS2
CS1
A15
A0-A12
D0-D7
8K x 8
RAM
BUSACT
V_SS

Example with Byte-Organized Memory Devices (Data Non-Multiplexed) VR0A1646

Figure C-3. 16-Bit Addresses, 16-Bit Data, Multiplexed Bus Configuration

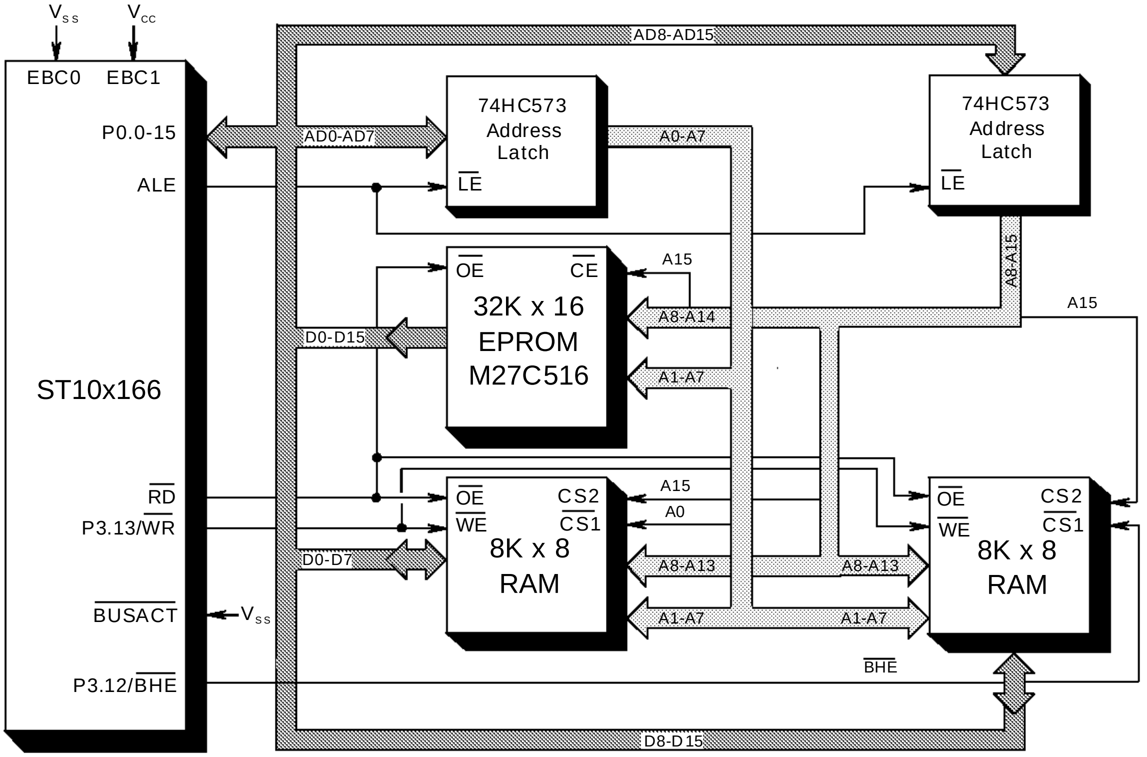

Vss
Vcc
EBC0
EBC1
P0.0-15
ALE
ST10x166
RD
P3.13/WR
BUSACT
Vss
P3.12/BHE
AD8-AD15
AD0-AD7
74HC573
Address
Latch
LE
A0-A7
74HC573
Address
Latch
LE
A8-A15
OE
CE
32K x 16
EPROM
M27C516
A15
A8-A14
A1-A7
D0-D15
A15
OE
CS2
WE
CS1
8K x 8
RAM
A15
A0
A8-A13
A1-A7
D0-D7
OE
CS2
WE
CS1
8K x 8
RAM
A8-A13
A1-A7
BHE
D8-D15

Example with Byte and Word-Organized Memory Devices (Data Multiplexed) VR0B1646

Figure C-4. 16-Bit Addresses, 16-Bit Data, Non-Multiplexed Bus Configuration

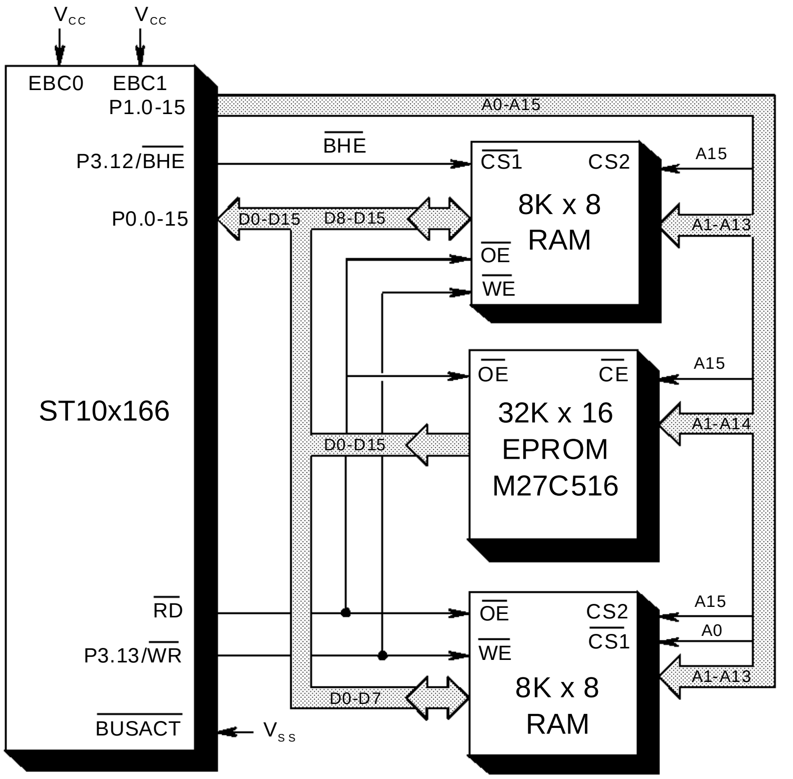
V_{CC}
V_{CC}
EBC0
EBC1
P1.0-15
P3.12/$\overline{BHE}$
P0.0-15
ST10x166
$\overline{RD}$
P3.13/$\overline{WR}$
$\overline{BUSACT}$
V_{SS}
A0-A15
$\overline{BHE}$
D0-D15
D8-D15
$\overline{CS1}$
CS2
8K x 8
RAM
$\overline{OE}$
$\overline{WE}$
A15
A1-A13
$\overline{OE}$
$\overline{CE}$
32K x 16
EPROM
M27C516
A15
A1-A14
D0-D15
$\overline{OE}$
CS2
$\overline{WE}$
$\overline{CS1}$
8K x 8
RAM
A15
A0
A1-A13
D0-D7

Example with Byte and Word-Organized Memory Devices (Data Non-Multiplexed)
VR0C1646

C.2 CALCULATION OF THE USER SELECTABLE BUS TIMING PARAMETERS

This section provides tables which ease the calculation of the number of the ST10x166's wait states which must be programmed into the MCTC bit field and/or MTTC bit of the SYSCON register to match the external memory timing specifications.

The following particular memory accesses are considered in this section:

1) Memory Read via a Multiplexed Bus with Read/Write Delay
2) Memory Write via a Multiplexed Bus with Read/Write Delay
3) Memory Read via a Non-Multiplexed Bus with Read/Write Delay
4) Memory Write via a Non-Multiplexed Bus with Read/Write Delay

Two types of tables exist for each of these memory accesses. The tables signified by an extension '.a' contain formulas for the determination of both the maximum values of particular timing parameters at given numbers of wait states and of the numbers of required wait states at given timing parameter values. These tables consist of columns, as follows:

- Symbol: **Specifies commonly used symbols of the particular timing parameters.**
- Meaning: **Provides a short explanation of the symbolic timing parameters.**
- 40MHz Clock: **Specifies formulas to be used at a fixed oscillator frequency of 40MHz.**
- Variable Timing: **Specifies formulas to be used at a variable oscillator frequency.**

Other so called 'Quick Tables', signified by an extension '.b', contain results calculated by inserting typical values into the formulas represented in the corresponding table '.a'.

The required numbers of wait states are specified in all subsequent tables by symbols, as follows:

For memory read accesses:

n1: **Number of wait states required to match 'Address to Valid Data In Time'**
$0 \le n1 \le 15$; n1 integer

n2: **Number of wait states required to match '$\overline{RD}$ to Valid Data In Time'**
$0 \le n2 \le 15$; n2 integer

n3: **Number of wait states required to match 'Data Float After $\overline{RD}$ Time'**
$0 \le n3 \le 1$; n3 integer

n: **Total number of resulting wait states**
n = max{n1, n2}+n3

For memory write accesses:

n1: **Number of wait states required to match 'Write Pulse Low Time'**
$0 \le n1 \le 15$; n1 integer

n2: **Number of wait states required to match 'Data Valid to $\overline{WR}$ Time'**
$0 \le n2 \le 15$; n2 integer

n: **Total number of resulting wait states required**
n = max{n1, n2}

Note: **The ST10x166's wait states can be programmed in increments of one. To get the number of required wait states to be programmed, any value (n1, n2, n3) calculated by means of the formulas in tables '.a' must be rounded up to the next integer value (e.g. 1.2→2). If a calculation already supplies an integer result (e.g. 1.0), one has to perform a worst case evaluation of the selected application (signal delays, etc.) to decide whether an additional wait state must be considered or not. If wait state calculations supply different values for the same programmable parameter, the worst case (maximum) value must always be considered. Then the SYSCON register has to be programmed, as follows:**

MTTC: 1 - n3
MCTC: 15 - max{n1,n2}

Note: **For some memories, the Chip Select Time (t_{cs}) may be as long as the Address to Valid Data In Time (t_{acc}). Formulas within this document do not consider any signal delay caused by the chip selecting logic.**

All times are specified in nanoseconds [ns], unless noted otherwise.

Table C-1. Multiplexed Memory Read With Read/Write Delay

Symbol	Meaning	40MHz Clock	Variable Timing
t_{acc}	**Address to Valid Data In**	**t_{acc} ≤ = t_{17} + n1 x 50** **n1 ≥ = t_{acc} /50 - 1.5**	**t_{acc} ≤ = 4TCL - 25 + n1 x 2TCL** **n1 ≥ = (t_{acc} + 25) /2TCL - 2**
t_{oe}	**$\overline{RD}$ to Valid Data In**	**t_{oe} ≤ = t_{14} + n2 x 50** **n2 ≥ = t_{oe} /50 - 0.7**	**t_{oe} ≤ = 2TCL - 15 + n2 x 2TCL** **n2 ≥ = (t_{oe} + 15) /2TCL - 1**
t_{df}	**Data Float After $\overline{RD}$**	**t_{df} ≤ = t_{19} + n3 x 50** **n3 ≥ = t_{df} /50 - 0.7**	**t_{df} ≤ = 2TCL - 15 + n3 x 2TCL** **n3 ≥ = (t_{df} + 15) /2TCL - 1**
t	**ALE Cycle Time**	**t = 150 + n x 50**	**t = 6TCL + n x 2TCL**

Note :

- **TCL = 1/f_{OSC} (25ns at 40MHz)**
- **ALE Cycle Time (= Memory Cycle Time) = 6TCL (150ns at 40MHz) for 0 wait state operation**
- **An address float time of 5ns must be permissible**
- **t_{14},t_{17},t_{19}: See Device Specification Section**

Table C-2. Multiplexed Memory Read with Read/Write Delay (Quick Table)

t_{acc}	n1	t_{oe}	n2	t_{df}	n3
≤ = 75	**0**	**≤ = 35**	**0**	**≤ = 35**	**0**
≥ = 75 .. ≤ = 125	**1**	**≥ = 35 .. ≤ = 85**	**1**	**≥ = 35 .. ≤ = 85**	**1**
≥ = 125 .. ≤ = 175	**2**	**≥ = 85 .. ≤ = 135**	**2**		
≥ = 175 .. ≤ = 225	**3**	**≥ = 135 .. ≤ = 185**	**3**		
≥ = 225 .. ≤ = 275	**4**	**≥ = 185 .. ≤ = 235**	**4**		
≥ = 275 .. ≤ = 325	**5**	**≥ = 235 .. ≤ = 285**	**5**		
. . . . . .	**.**	**. . . . . .**	**.**		

Table C-3. Multiplexed Memory Write With Read/Write Delay

Symbol	Meaning	40MHz Clock	Variable Timing
t_{wr}	**Write Pulse Low Time**	**$t_{wr} \leq = t_{12}$ + n1 x 50** **n1 $\geq = t_{wr}$ /50 - 0.8**	**$t_{wr} \leq$ = 2TCL - 10 + n1 x 2TCL** **n1 $\geq$ = (t_{wr} + 10) /2TCL - 1**
t_{dw}	**Data Valid to $\overline{WR}$**	**$t_{dw} \leq = t_{22}$ + n2 x 50** **n2 $\geq = t_{dw}$/50 - 0.7**	**$t_{dw} \leq$ = 2TCL - 15 + n2 x 2TCL** **n2 $\geq$ = (t_{dw} + 15) /2TCL - 1**
t_{dh}	**Data Hold after $\overline{WR}$**	**$t_{dh} \leq = t_{23}$** **$t_{dh} \leq$ = 35**	**$t_{dh} \leq$ = 2TCL - 15**
t_{as}	**Address Setup**	**$t_{as} \leq = t_6 + t_8$** **$t_{as} \leq$ = 25**	**$t_{as} \leq$ = 2TCL - 15**
t	**ALE Cycle Time**	**t = 150 + n x 50**	**t = 6TCL + n x 2TCL**

Note :

- **TCL = 1/ f_{osc} (25ns at 40MHz)**
- **ALE Cycle Time (= Memory Cycle Time) = 6TCL (150ns at 40MHz) for 0 wait state operation**
- **An address float time of 5ns must be permissible**
- **t_6, t_8, t_{12}, t_{22}, t_{23} : See Device Specification Section**
- **Take care of t_{dh} and t_{as} ! These times cannot be prolonged by wait states.**

Table C-4. Multiplexed Memory Write With Read/Write Delay (Quick Table)

t_{wr}	n1	t_{dw}	n2
≤ = 40	**0**	**≤ = 35**	**0**
≥ = **40 .. ≤ = 90**	**1**	≥ = **35 .. ≤ = 85**	**1**
≥ = 90 .. ≤ = 140	**2**	≥ = **85 .. ≤ = 135**	**2**
≥ = 140 .. ≤ = 190	**3**	**≥ = 135 .. ≤ = 185**	**3**
≥ = 190 .. ≤ = 240	**4**	**≥ = 185 .. ≤ = 235**	**4**
≥ = 240 .. ≤ = 290	**5**	**≥ = 235 .. ≤ = 285**	**5**
. . . . . .	**.**	**. . . . . .**	**.**

Table C-5. Non-Multiplexed Memory Read With Read/Write Delay

Symbol	Meaning	40MHz Clock	Variable Timing
t_{acc}	**Address to Valid Data In**	**$t_{acc} \leq = t_{17}$ + n1 x 50** **n1 $\geq = t_{wr}$ /50 - 1.5**	**$t_{acc} \leq$ = 4TCL - 25 + n1 x 2TCL** **n1 $\geq$ = (t_{acc} + 25) /2TCL - 2**
t_{oe}	**$\overline{RD}$ to Valid Data In**	**$t_{oe} \leq = t_{14}$ + n2 x 50** **n2 $\geq = t_{dw}$ /50 - 0.7**	**$t_{oe} \leq$ = 2TCL - 15 + n2 x 2TCL** **n2 $\geq$ = (t_{oe} + 15) /2TCL - 1**
t_{df} 1)	**Data Float after $\overline{RD}$**	**$t_{df} \leq = t_{20}$ +n3 x 50** **n3 $\leq = t_{df}$ /50 - 0.7**	**$t_{df} \leq$ = 2TCL - 15+ n3 x 2TCL** **n3 $\geq$ = (t_{df} + 15) /2TCL - 1**
t 1)	**ALE Cycle Time**	**t = 100 + n x 50**	**t = 4TCL + n x 2TCL**

Note:

- **If the external memory is only used for code storage, t_{df} may be longer than specified here. In this case, n = max{n1, n2} because n3 = 0.**
- **ALE Cycle Time (= Memory Cycle Time) = 4TCL (100ns at 40MHz)**
- **t_{14},t_{17},t_{20}: See Device Specification Section**

Table C-6. Non-Multiplexed Memory Read With Read/Write Delay (Quick Table)

t_{acc}	n1	t_{oe}	n2	t_{df}	n3
≤ = 75	**0**	≤ = 35	**0**	**≤ = 35**	**0**
≥ = 75 .. ≤ = 125	**1**	≥ = 35 .. ≤ = 85	**1**	**≥ = 35 .. ≤ = 85**	**1**
≥ = 125 .. ≤ = 175	**2**	≥ = 85 .. ≤ = 135	**2**		
≥ = 175 .. ≤ = 225	**3**	**≥ = 135 .. ≤ = 185**	**3**		
≥ = 225 .. ≤ = 275	**4**	**≥ = 185 .. ≤ = 235**	**4**		
≥ = 275 .. ≤ = 325	**5**	**≥ = 235 .. ≤ = 285**	**5**		
.. .. ..	.	.. .. ..	.		

Table C-7. Non-Multiplexed Memory Write With Read/Write Delay

Symbol	Meaning	40MHz Clock	Variable Timing
t_{wr}	**Write Pulse Low Time**	**$t_{wr} \leq = t_{12}$ + n1 x 50** **n1 $\geq = t_{wr}$/50 - 0.8**	**$t_{wr} \leq$ = 2TCL - 10 + n1 x 2TCL** **n1 $\geq$ = (t_{wr} + 10) /2TCL - 1**
t_{dw}	**Data Valid to $\overline{WR}$**	**$t_{dw} \leq = t_{22}$ + n2 x 50** **n2 $\geq = t_{dw}$/50 - 0.7**	**$t_{dw} \leq$ = 2TCL - 15 + n2 x 2TCL** **n2 $\geq$ = (t_{dw} + 15) /2TCL - 1**
t_{dh}	**Data Hold after $\overline{WR}$**	**$t_{dh} \leq = t_{24}$** **$t_{dh} \leq$ = 15**	**$t_{dh} \leq$ = 2TCL - 10**
t_{as}	**Address Setup**	**$t_{as} \leq = t_6 + t_8$** **$t_{as} \leq$ = 25**	**$t_{as} \leq$ = 2TCL - 25**
t	**ALE Cycle Time**	**t = 100 + n x 50**	**t = 4TCL + n x 2TCL**

Note:

- **ALE Cycle Time (= Memory Cycle Time) = 4TCL (100ns at 40MHz) for 0 wait state operation**
- **t_6,t_8,t_{12},t_{22},t_{24}: See Device Specification Section**
- **Take care of t_{dh} and t_{as} ! These times cannot be prolonged by wait states.**

Table C-8. Non-Multiplexed Memory Write With Read/Write Delay (Quick Table)

t_{acc}	n1	t_{oe}	n2
$\leq$ = 40	**0**	**$\leq$ = 35**	**0**
$\geq$ = 40 .. $\leq$ = 90	**1**	**$\geq$ = 35 .. $\leq$ = 85**	**1**
$\geq$ = 90 .. $\leq$ = 140	**2**	**$\geq$ = 85 .. $\leq$ = 135**	**2**
$\geq$ = 140 .. $\leq$ = 190	**3**	**$\geq$ = 135 .. $\leq$ = 185**	**3**
$\geq$ = 190 .. $\leq$ = 240	**4**	**$\geq$ = 185 .. $\leq$ = 235**	**4**
$\geq$ = 240 .. $\leq$ = 290	**5**	**$\geq$ = 235 .. $\leq$ = 285**	**5**
. . . . . .	**.**	**. . . . . .**	**.**

ΑΠΠΕΝΔΙΞ Δ
ΑΠΠΛΙΧΑΤΙΟΝ ΝΟΤΕ

PROGRAMMING FLASH MEMORY OF THE ST10F166

ΙΝΤΡΟΔΥΧΤΙΟΝ

The ST10F166 high end microcontroller with on-chip Flash Memory fulfills the requirements of applications requiring an update to a part or all the program code. The block erase capability is also of use during the application development stage or for program updating. For data acquisition, the ST10F166 allows the programming of 16 or 32 bits data independently.

Operations on the Flash memory are under software control. Erasure or programming is a simple procedure, however precautions must be taken to prevent damage to the ST10F166.

This application note describes the basic characteristics of the Flash memory cell, and the different algorithms used for erasure and programming.

ΦΥΝΔΑΜΕΝΤΑΛΣ ΟΦ ΦΛΑΣΗ ΜΕΜΟΡΨ

The Flash memory included in the ST10F166 combines the EPROM programming mechanism with electrical erasability (like EEPROM) to create a highly reliable and cost effective memory. A Flash memory cell consists of a single transistor with a floating gate for charge storage like EPROM, the main difference being that Flash memory uses a thinner gate oxide.

Φιγυρε 1. ΣΓΣ–ΤΗΟΜΣΟΝ Φλαση Χελλ ςΣ Επρομ Χελλ

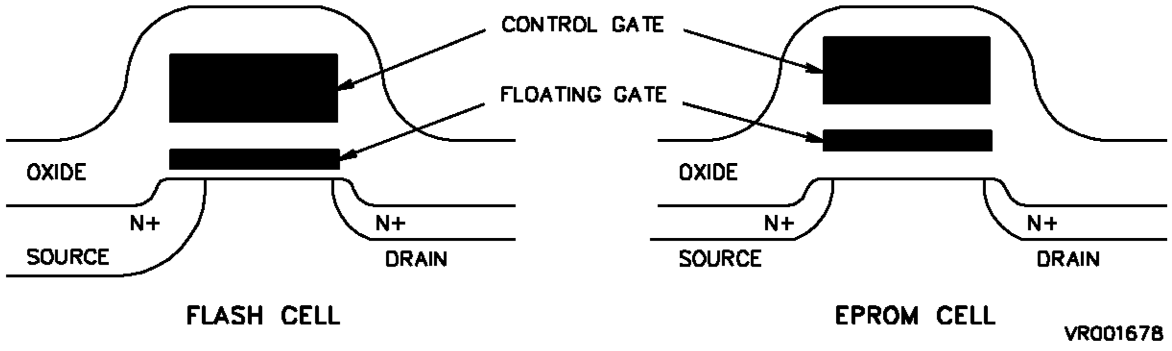

PROGRAMMATION : HOT e INJECTION
ERASURE : THROUGH TUNNEL OXIDE
F N MECHANISM
BULK ERASURE OF ENTIRE
MEMORY IN 1SEC RANGE

PROGRAMMATION : HOT e INJECTION
ERASURE : UV

This is advance information from SGS-THOMSON. Details are subject to change without notice.

The programming mechanism of a cell is based on hot electron injection. This means that the cell control gate and drain are set to a high voltage and the cell source is grounded. The high voltage on the drain generates “hot” electrons through the channel, and the high voltage on the control gate traps the free electrons into the floating gate.

Φιγυρε 2. Φλαση Μεμορψ Χελλ Προγραμμινγ Μεχηανισμ

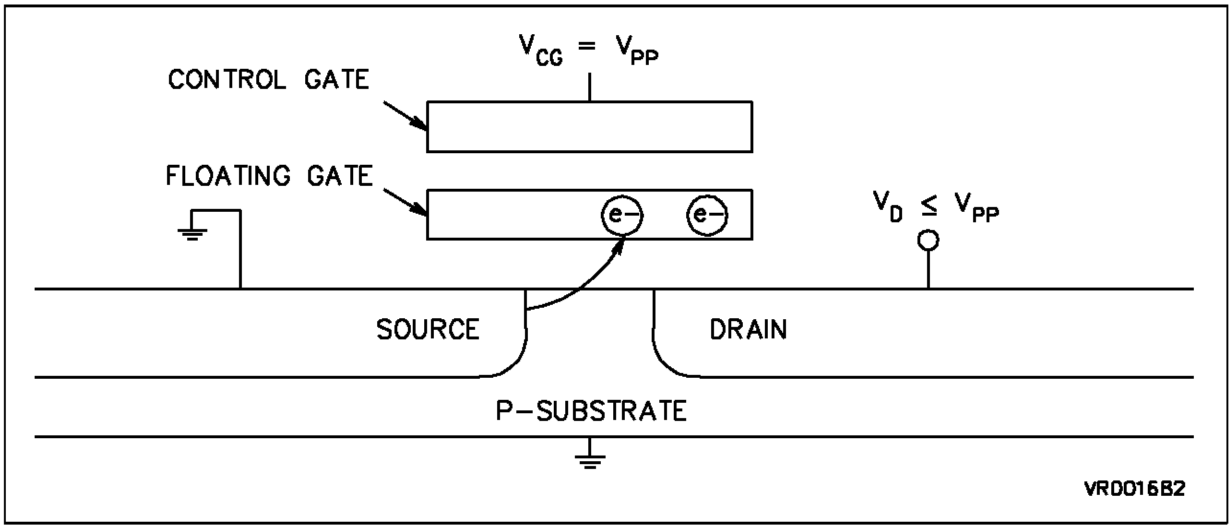
$V_{CG} = V_{PP}$
CONTROL GATE
FLOATING GATE
e−
e−
$V_D \leq V_{PP}$
SOURCE
DRAIN
P−SUBSTRATE
VR0016B2

The cell erase mechanism is based on “Fowler-Nordheim” tunneling. This means that the cell control gate is grounded, the cell drain is disconnected and the high voltage is applied to the cell source. The high electric field between the floating gate and the source removes electrons from the floating gate.

Φιγυρε 3. Φλαση Μεμορψ Χελλ Ερασε Μεχηανισμ

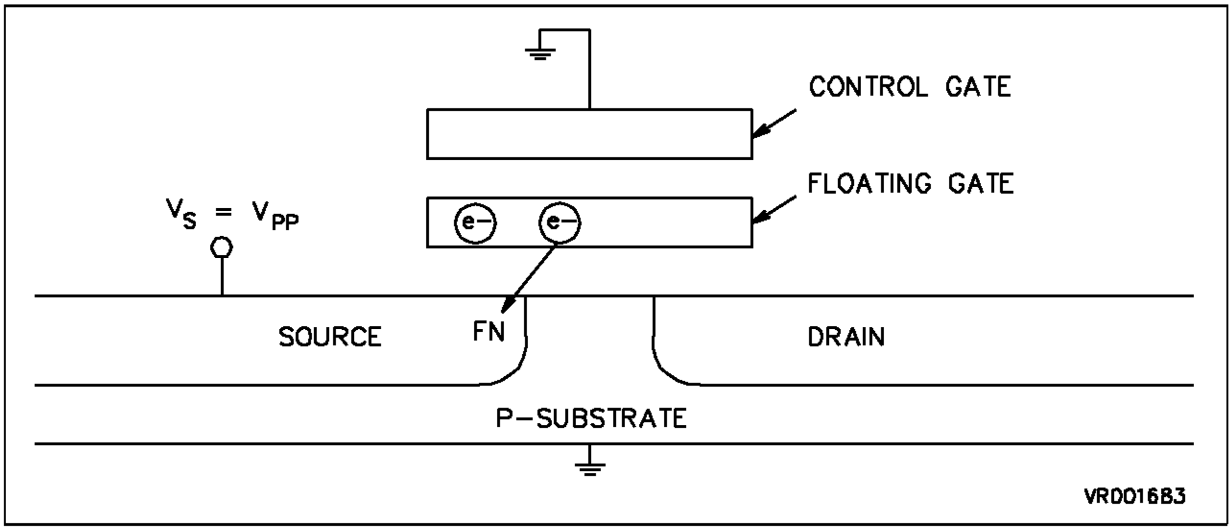
CONTROL GATE
FLOATING GATE
$V_S = V_{PP}$
e−
e−
SOURCE
FN
DRAIN
P−SUBSTRATE
VR0016B3

Unlike standard EEPROM memory, where individual bytes can be erased, the Flash memory of the ST10F166 performs erase on blocks where the high voltage is applied to all cells simultaneously.

A difficulty with Flash memory concerns the requirement to set all the cells of a block to a minimum threshold level suitable for programming and erase operations. Applying a new erasing pulse to a block with a different storage level on each cell (a different threshold level), can be dangerous for the functionality of the Flash memory.

Φιγυρε 4. Φλαση Ερασυρε

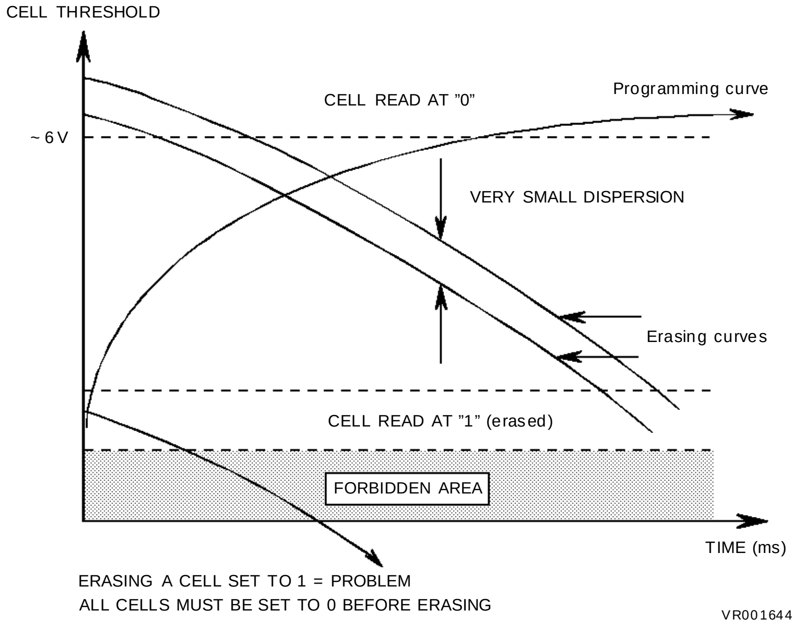

A fast erasing cell may have a threshold voltage too low or negative, in this case the transistor is always on and is read at “one”. This has the effect of leakage on other cells placed on the same array column. Thus all cells of the column will be read at “one” instead of “zero”.

To avoid this, the user must equalize the amount of charge on each cell by programming to “0” all cells of the bank before every erasure.

For increased reliability the SGS-THOMSON Flash memory technology combined with the use of the Erase-verify PRESTO F algorithm, provides a tight erase threshold voltage distribution, generating sufficient margin to the faster erasing cell and the minimum threshold level required to read a “one” data value.

ΕΡΑΣΕ & ΠΡΟΓΡΑΜΜΙΝΓ ΧΟΝΤΡΟΛ

To simplify control of the Flash operation modes, the ST10F166 Flash memory includes a Flash Control Register (FCR) used for all programming or erase operations. Mapped virtually into the Flash address space, FCR is not accessible during normal memory access modes and must be unlocked by a special instruction sequence.

To avoid unpredictable programming or erase operation on the Flash memory, the ST10F166 provides several levels of security:

Φιρστ λεϖελ: **the user must perform a special sequence to enable the FCR and to enter into the writing mode.**

Σεχονδ λεϖελ: **to operate on the Flash memory, two steps are necessary. First the user must set up the FCR in the desired configuration, second the operation begins ONLY with the appropriate command.**

Τηιρδ λεϖελ: **during the writing mode, two bits of FCR (VPPRIV & FCVPP) indicate to the user the status of VPP (the high voltage) before and during an operation. It is advisable for the user to test them in the erase or programming routine.**

ΤΗΕ ΠΡΕΣΤΟ Φ ΠΡΟΓΡΑΜ ΩΡΙΤΕ ΑΛΓΟΡΙΤΗΜ

The following section explains the Presto F Program Write Algorithm shown in figure 5 for a better understanding of the user. For high reliability, it is necessary to follow this algorithm to program the Flash memory.

It is considered that the EBC1/VPP pin has been switched to the VPP supply after reset, and the write mode has been unlocked.

– ΡΕΑΔ ςΠΠΡΙς

After setting the program mode, a delay of 10µs must be inserted to allow the device to set its internal high voltage signals. Then, before starting the proper programming operation, the VPP level must be checked. VPPRIV is at the “one” level if VPP is correct. If it is not the programming algorithm must be held until VPP reaches its correct value or until the VPP supply is set correctly.

```
mov     fcrrd,   FCR          ;  read FCR
jnb     vppriv,  vpp_fail     ;  test if VPP is high
```

– Ν = 0

Initialization of N variable to zero. The Presto F Program Write algorithm consist of applying several 100µs pulses to each word until a correct verify occurs. The maximum number of programming pulse is fixed to 25, if this limit is reached the word will never be programmed.

In case of several words to program, an Address variable can be initialized.

```
mov     lpcnt,   #ALL0        ;  reset algo. loop counter
```

– Ωριτε Προγραμμινγ σετυπ χομμανδ ιντο ΦΧΡ

First step for programming: set FCR with the desired value.

Set FWE bit to enable programming mode.

Clear CKCTL0 & CKCTL1 bits to define a 100µs programming time.

Choose the configuration:

Set WDWW bit for double word programming.

Clear WDWW bit for word programming.

Set FWMSET bit for write mode.

Take care at this point as this step prepares the device for programming but does not activate the process.

```
mov     fcrval,  #ALL0        ;  reset FCR data value
bset    fwe                   ;  FWE=1 define programming operation
bclr    ckctl0                ;  CKCTL0=0 )
bclr    ckctl1                ;  CKCTL1=0 ) define a 100 µs pulse
bset    wdww                  ;  WDWW=1 define 32-bit configuration
bset    fwmset                ;  FWMSET=1 enable program mode
mov     FCR,     fcrval       ;  load FCR with the desired value
```

– Ωριτε ϖαλιδ δατα αδδρεσσ

The following command starts automatically the programming process.

For word programming:

```
mov     [addrev],datal        ;  programming command
```

For double word programming:

```
mov     [addrev],datal        ;  programming command, even word
mov     [addrev],datah        ;  programming command, odd word
```

Φιγυρε 5. ΠΡΕΣΤΟ Φ Προγραμ Ωριτε Αλγοριτημ

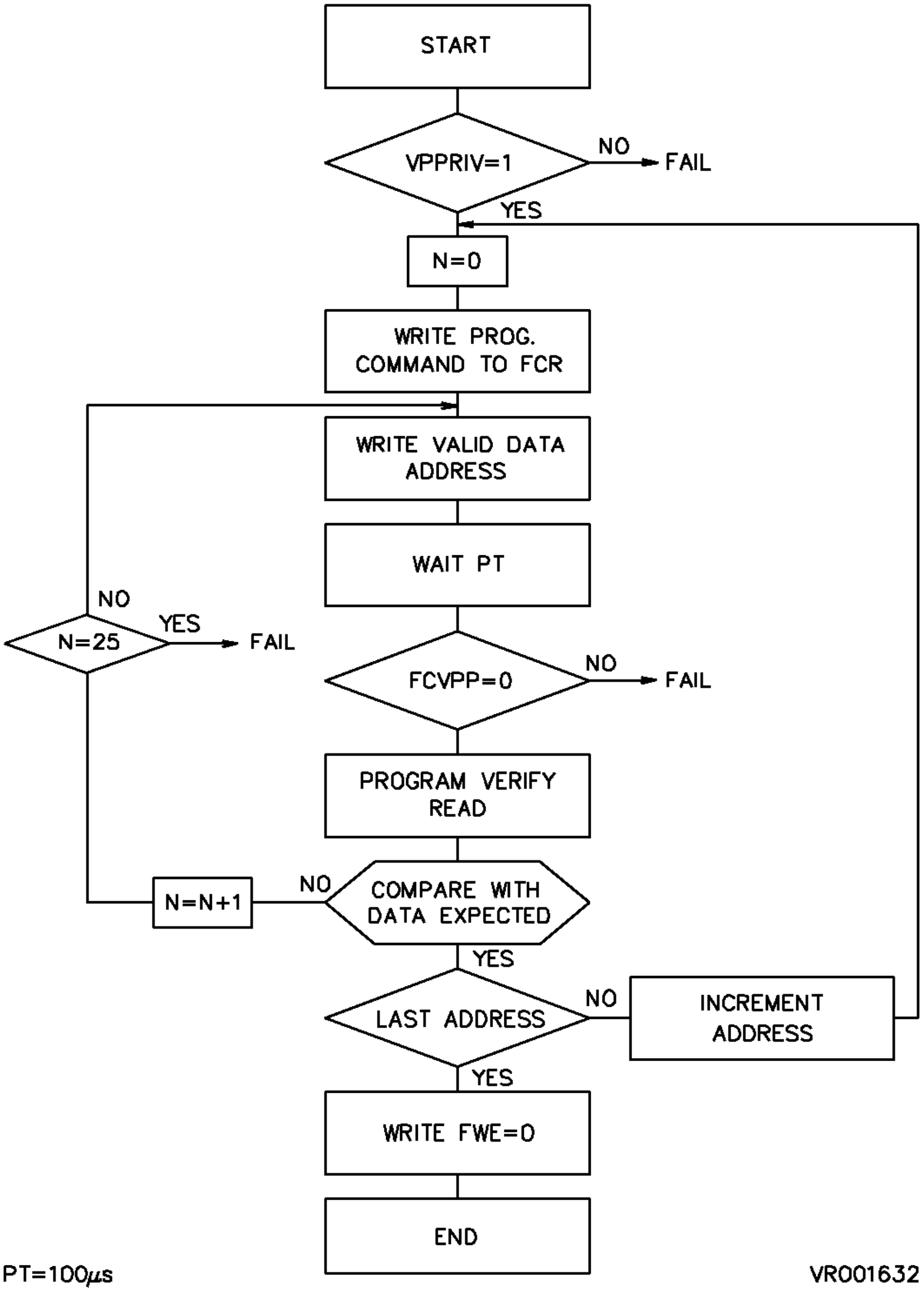
START
VPPRIV=1
NO
FAIL
YES
N=0
WRITE PROG. COMMAND TO FCR
WRITE VALID DATA ADDRESS
WAIT PT
NO
N=25
YES
FAIL
FCVPP=0
NO
FAIL
PROGRAM VERIFY READ
N=N+1
NO
COMPARE WITH DATA EXPECTED
YES
LAST ADDRESS
NO
INCREMENT ADDRESS
YES
WRITE FWE=0
END
PT=100µs
VR001632

– ΩΑΙΤ ΠΤ

The programming time (PT) depends on the bits CKCTL0 & CKCTL1 of FCR (see setting of FCR). The end of programming can be detected by polling on the FBUSY bit of FCR.

FBUSY set to “1” indicates programming is in progress.

FBUSY cleared indicates programming has ended.

```
w    aitp r:   mov     fc  rrd,   FCR          ; read FCR
               jb      bu       sy,   w aitpr        ;  jump  if   progr amming is not    ended
```

– ΦΧςΠΠ = 0∀ ?

To have a well programmed word, it is important to check if VPP was at the correct value during programming. This is indicated by the status of the FCVPP bit of FCR.

If FCVPP = “0” there was no problem, continue with the algorithm.

If FCVPP = “1” VPP was not enough high during programming, jump to the user defined VPP-fail routine.

An example of this routine could be a reset of FCR, then a new test of the VPPRIV bit and, if all is correct, redo a programming operation, otherwise exit the programming routine.

```
               jb        fc   vpp,   vp p_fai  l     ;   jump  if   FCVPPis set
```

– ΠΡΟΓΡΑΜ ςΕΡΙΦΨ ΡΕΑΔ

To check if the word is correctly programmed, a comparison must be performed with the data expected. A Program Verify Read will check the cell margin of the word.

Perform twice the same reading instruction separated by a time of 4 µs.

This sequence must be made to get a correct reading of the word. This time corresponds to an internal switching of signals.

– ΧΟΜΠΑΡΕ ΩΙΤΗ ΔΑΤΑ ΕΞΠΕΧΤΕΔ

This step can be merged with the Program Verify Read step as the comparison instruction is a read instruction. If the data programmed at the address given is different from the data expected, an extra programming operation must be performed (the next step).

```
cmp       datal,    [a ddrev ]      ;  first    ins truct  ion  for   PVM (even )
call  a    cc _UC,   wa it4           ; 4 µs
cmp        datal,    [a ddrev ]      ;  second in  struc  tion   for   PVM
jmpr       cc_NZ,   prog            ;    jump  if   the   word  is not c    orrec tly
                                     ;  progr ammed, re   start   pro gramming
cmp        datah,    [a ddrod ]      ;  first    ins truct  ion  for   PVM (odd)
call  a    cc _UC,   wa it4           ; 4 µs
cmp        datah,    [a ddrod ]      ;  second in  struc  tion   for   PVM
jmpr       cc_NZ,   prog            ;    jump  if   the   word  is not c    orrec tly
                                     ;  progr ammed, re   start   pro gramming
```

– N = 25 ?

For each new programming operation the N variable must be incremented; at this point, it must be tested to verify whether the 25 limit has been reached or not. If yes, the word will never be programmed and the algorithm should be exited from. In this case a possible solution is to change the address of the word to program.

```
add     lpcnt,  #01h        ; increment the algo. loop counter
cmp     lpcnt,  #MAXLOOP1   ; compare to the limit
jmpr    cc_Z,   prg_fail    ; jump if limit has been reached
```

– ΛΑΣΤ ΑΔΔΡΕΣΣ

In case of consecutives words to program, check the address variable to know if the last address has been reached. If not, increment the address variable and start another programming operation from the beginning of the algorithm.

– ΩΡΙΤΕ ΦΩΕ = 0∀

All the words are programmed, exit the presto F program Write algorithm. All programming or program verify read operation are stopped by a reset of FCR register (especially FWE bit cleared). a Normal reading of the Flash memory can be performed only after this step.

```
mov     FCR,    #ALL0       ; reset FCR and exit program mode
mov     FCR,    fcrval
```

ΤΗΕ ΠΡΕΣΤΟ Φ ΕΡΑΣΕ ΑΛΓΟΡΙΤΗΜ

The following section explains the Presto F Erase Algorithm shown in figure 6 but all parts already described in the previous section will not be explained again. Note that an entire block will be erased instead of one or two words as programming.

– ΑΛΛ ΩΟΡΔΣ ΑΤ 0000η

Prior to erasure, program all block addresses to 0000h. This step equalizes the charge on each memory cell of the block. Erasure removes charge from all memory cells regardless of their previous state, and not performing this programming will drive cells previously at a “one” to be stuck at “one” (see in the Fundamentals of Flash memory section).

The Presto F Program Write Algorithm is used for this block programming. (refer to the previous section).

– ςΑΡΙΑΒΛΕ ΙΝΙΤΙΑΛΙΖΑΤΙΟΝ

Initialize two variables:

N = 0 for the pulse count, and the address variable to the first address of the block. N can be incremented from 0 to 3000.

Note: with each pulse, all the block will be erased.

– ΩΡΙΤΕ ΕΡΑΣΕ ΣΕΤΥΠ ΧΟΜΜΑΝΔ ΙΝΤΟ ΦΧΡ

As for programming, this step only prepares the device for erasure.

Set FWE,FEE bits to enable erasure.

Clear CKCTL0 & set CKCTL1 bits to define a 10 ms erasing time.

Choose the block configuration for erasure (BE0,BE1).

Clear WDWW bit.

Set FWMSET bit for program mode.

– ΩΡΙΤΕ ΕΡΑΣΕ ΧΟΜΜΑΝΔ

Perform the specific instruction to start automatically the erase process.

```
mov     [fl_scan],fl_scan     ;  erase command, erasure start
```

– ΩΑΙΤ ΕΤ

The erasing time (ET) depends on the bits CKCTL0 & CKCTL1 of FCR (see setting of FCR). The end of programming can be detected by polling on the FBUSY bit of FCR.

FBUSY set to “1” indicates erase is in progress.

FBUSY cleared indicates erase has ended.

– ΦΧςΠΠ = 0∀ ?

Test VPP to detect any discontinuity in VPP during erasure (see previous section).

Φιγυρε 6. ΠΡΕΣΤΟ Φ Ερασε Αλγοριτημ

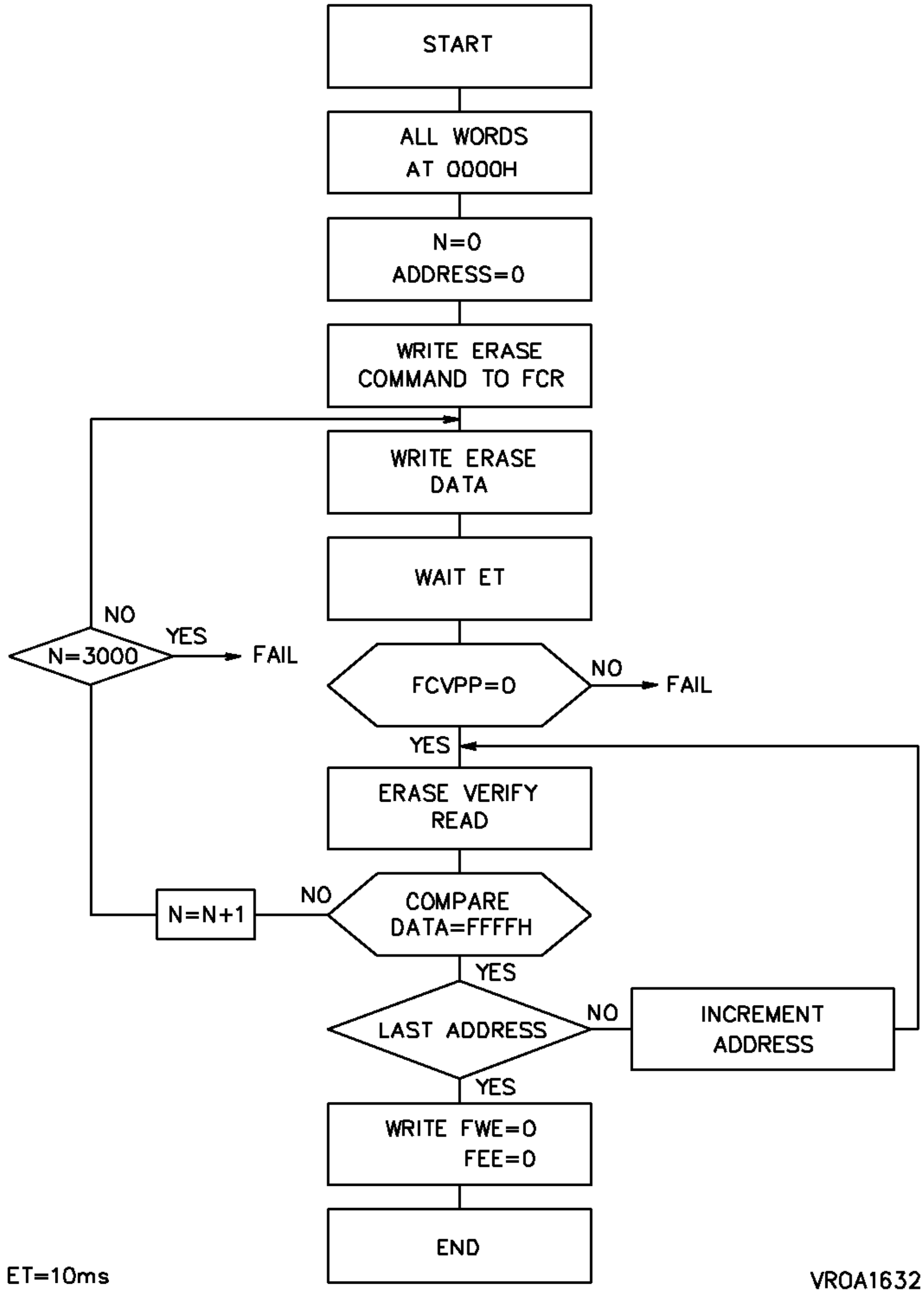
START
ALL WORDS AT 0000H
N=0
ADDRESS=0
WRITE ERASE COMMAND TO FCR
WRITE ERASE DATA
WAIT ET
N=3000
NO
YES
FAIL
FCVPP=0
NO
FAIL
YES
ERASE VERIFY READ
N=N+1
NO
COMPARE DATA=FFFFH
YES
LAST ADDRESS
NO
INCREMENT ADDRESS
YES
WRITE FWE=0
FEE=0
END
ET=10ms
VR0A1632

- ΕΡΑΣΕ ςΕΡΙΦΨ ΡΕΑΔ

This mode, equivalent to the Program Verify Read guarantees a improved cell margin of a word.

Read the data at the address given by the address variable twice with the same instruction separated by a time of 4µs.

- ΧΟΜΠΑΡΕ ΔΑΤΑ = ΦΦΦΦη

Compare the data read to FFFFh. If it equals FFFFh, this address has been erased; continue verification until the last address of the block has been verified. If not, increment N variable. Apply a new erasing pulse to the block, and continue until the data is correctly checked or the maximum erase pulse count (3000) has been reached.

```
read _ff:      cmp      al l1,   [ fl_sc  an]    ;  first   ins truct  ion  for  EVM
               call  a   cc_UC,   wa it4           ; 4  µs
               cmp      al l1,   [ fl_sc  an]    ;  secon d in  struc  tion   for  EVM
               jmpr     cc_NZ,   erase          ;   jump  if   the  word  is not e   rased
```

- ΛΑΣΤ ΑΔΔΡΕΣΣ

Check the address variable to see if the last address of the block has been reached. If not, increment the address variable and start another

Erase Verify Read.

```
               add      fl  _scan ,#02h          ;  incre  ment  the  bank poi  nter
               cmp      fl  _scan ,#FL_  SIZE     ;  compare to the last bank a       ddres s
               jmpr     cc_NZ,   re  ad_ff       ;  jump  to  verif  y the next ad     dress
```

- ΩΡΙΤΕ ΦΩΕ = 0∀

All the block is erased, exit the Presto F Erase algorithm stopping all erasure or erase verify read operations with a reset of FCR register (especially FWE, FEE bits cleared)

Normal reading of Flash memory can be performed only after this step.

ΡΥΛΕΣ ΦΟΡ ΥΣΙΝΓ ΤΗΕ ΦΛΑΣΗ ΜΕΜΟΡΨ

- Follow the Presto F Algorithm and verify its correct implementation. This will ensure that all the block has been programmed before erasure to minimize internal stresses on the memory cells, and to perform writing operation in a fast and reliable way.
- Verify VPP status before and after every writing operation.

ΒΑΣΙΧ ΡΟΥΤΙΝΕΣ ΦΟΡ ΕΡΑΣΥΡΕ ΑΝΔ ΠΡΟΓΡΑΜΜΙΝΓ

This section describes basic routines which can be helpful for the user. Erasure, 32-bit programming and 16-bit programming routines are written as subroutines to allow easy inclusion in a user program.

The following routines are written in a way to clarify the operations as well as possible.

The initial conditions are described at the head of the routine, if needed.

```
;          VARIABLE DEFINITIONS FOR THE FLASH MEMORY ROUTINES


ALL0          equ     00000h        ; constant 0
ALL1          equ     0FFFFh        ; constant FFFF
BLK_START     equ     03000h        ; first address of bank 1
FL_SIZE       equ     03000h        ; size of bank 1
FCR           equ     07FFEh        ; dummy address chosen for FCR
ADDREV        equ     0000Ch        ; address even (least significant bit)
ADDROD        equ     0000Eh        ; address odd (most significant bit)
DATAH         equ     09753h        ; data to program to odd address
DATAL         equ     08642h        ; data to program to even address
MAXLOOP1      equ     0001Ah        ; limit of the programming loop
MAXLOOP2      equ     00BB9h        ; limit of the erase loop
UNLOCK        equ     01000h        ; data to unlock the writing mode
WAIT4         equ     0000Bh        ; loop 4 µs
WAIT10        equ     0001Fh        ; loop 10 µs
addrev        LIT     ’R0’          ; even address pointer
fcrval        LIT     ’R1’          ; register for FCR writing
addrod        LIT     ’R2’          ; odd address pointer
datal         LIT     ’R3’          ; register with first data
datah         LIT     ’R4’          ; register with second data
lpcnt         LIT     ’R5’          ; algorithm loop counter
all1          LIT     ’R6’          ; register used in EVM
unlock        LIT     ’R7’          ; register used to unlock
val10u        LIT     ’R8’          ; counter 10µs
val4u         LIT     ’R9’          ; counter 4µs
wait_cnt      LIT     ’R10’         ; register to control wait loop
fl_scan       LIT     ’R13’         ; bank address pointer
fcrrd         LIT     ’R15’         ; register for FCR reading

fwe           LIT     ’R1.0’        ; FCR FWE bit
fee           LIT     ’R1.1’        ; FCR FEE bit
ckctl0        LIT     ’R1.5’        ; FCR CKCTL0 bit
ckctl1        LIT     ’R1.6’        ; FCR CKCTL1 bit
wdww          LIT     ’R1.7’        ; FCR WDWW bit
be0           LIT     ’R1.8’        ; FCR BE0 bit
be1           LIT     ’R1.9’        ; FCR BE1 bit
busy          LIT     ’R15.2’       ; FCR BUSY bit
fcvpp         LIT     ’R15.3’       ; FCR FCVPP bit
vppriv        LIT     ’R15.4’       ; FCR VPPRIV bit
```

```
; ERASE ROUTINE: erasure of bank 1, this routine assumes that the bank
; ______________ was previously programmed to 0000h before erasure


; ***** ***** *** INITIAL CONDITIONS: *** ***** ***** ***** ***** ***** ***** ***
;
;            ALL WORDS IN BANK 1 HAVE TO BE PROGRAMMED AT "ZERO"
;            WITH THE PRESTO F PROGRAM WRITE ALGORITHM
;
; ***** ***** ***** ***** ***** ***** ***** ***** ***** ***** ***** ***** ***** ***** *
f_erase:
;
; REGISTERS INITIALIZATION
;
          mov       lpcnt,      #ALL0             ; reset algo. loop counter
          mov       fcrval,     #ALL0             ; reset FCR data value
          mov       unlock,     #UNLOCK           ; load unlock data
          mov       val10u,     #WAIT10           ; load 10 µs loop data
          mov       val4u,      #WAIT4            ; load 4 µs loop data
          mov       wait_cnt,   #ALL0             ; reset wait loop counter
          mov       all1,       #ALL1             ; set R2 to FFFF
          mov       fl_scan,    #BLK_START        ; load first bank address
;
; UNLOCK SEQUENCE FOR ENTERING IN THE WRITE MODE
;
          mov       FCR,        unlock            ; first instruction
          mov       [unlock],   unlock            ; second instruction of unlock
                                                  ; sequence to enter in the write
                                                  ; mode
          calla     cc_UC,      wait10            ; time out 10 µs to set internal
                                                  ; signals
;
; FCR SET UP FOR ERASURE
;
          bset      fwe                           ; FWE=1 ) these two instructions
          bset      fee                           ; FEE=1 ) define the erasure
          bclr      ckctl0                        ; CKCTL0=0 )
          bset      ckctl1                        ; CKCTL1=1 ) define a 10ms pulse
          bclr      wdww                          ; WDWW=0
          bset      be0                           ; BE0=1 )
          bclr      be1                           ; BE1=0 ) select bank 1
          bset      fwmset                        ; FWMSET=1 confirm write mode
          mov       FCR,        fcrval            ; load FCR set up
```

```
;
; TEST VPP
;
          mov     fcrrd,    FCR                ; read FCR
          jnb     vppriv,   vpp_fail           ; test if VPP is high
;
; FLASH ERASURE
;
erase:
          add     lpcnt,    #01h               ; increment the algo. loop counter
          cmp     lpcnt,    #MAXLOOP2          ; compare to the limit
          jmpr    cc_Z,     eras_fail          ; jump if limit has been reached
          mov     [fl_scan],fl_scan            ; erase command, erasure start
waiter  : mov     fcrrd,    FCR                ; read FCR
          jb      busy,     waiter             ; jump if erasure is not ended
;
; TEST VPP
;
          jb      fcvpp,    vpp_fail           ; jump if FCVPP is set, to know if
                                               ; a fail occured because VPP did not
                                               ; have the correct value during
                                               ; erasure
;
; ERASE VERIFY MODE
;
read_ff:cmp       all1,     [fl_scan]          ; first instruction for EVM
          calla   cc_UC,    wait 4             ; time out 4 µs
          cmp     all1,     [fl_scan]          ; second instruction for EVM
          jmpr    cc_NZ,    erase              ; jump if the word is not erased
          add     fl_scan,#02h                 ; increment the bank pointer
          cmp     fl_scan,#FL_SIZE             ; compare to the last bank address
          jmpr    cc_NZ,    read_ff            ; jump to verify the next address
;
; EXIT OF WRITE MODE
;
          mov     fcrval,   #ALL0
          mov     FCR;      fcrval             ; reset FCR and exit write mode
          ret                                  ; return to main program
```

```
; 32-BIT PROGRAMMING ROUTINE:   programming of address 0000Ch with 08642h
; ________________________________   and address 0000Eh with 09753h

bit32prg:
;
; REGISTER INITIALIZATION
;
          mov     lpcnt,    #ALL0             ; reset algo. loop counter
          mov     fcrval,   #ALL0             ; reset FCR data value
          mov     unlock,   #UNLOCK           ; load unlock data
          mov     val10u,   #WAIT10           ; load 10 µs loop data
          mov     val4u,    #WAIT4            ; load 4 µs loop data
          mov     wait_cnt, #ALL0             ; reset wait loop counter
          mov     all1,     #ALL1             ; set R2 to FFFF
          mov     datal,    #DATAL            ; load data for even address
          mov     datah,    #DATAH            ; load data for odd address
          mov     addrev,   #ADDREV           ; load even address
          mov     addrod,   #ADDROD           ; load odd address
;
; UNLOCK SEQUENCE FOR ENTERING IN THE WRITE MODE
;
          mov     FCR,      unlock            ; first instruction
          mov     [unlock],unlock             ; second instruction of unlock
                                              ; sequence to enter in the write
                                              ; mode
          calla   cc_UC,    wait10            ; time out 10 µs to set internal
                                              ; signals
;
; FCR SET UP FOR PROGRAMMING
;
          bset    fwe                         ; FWE=1 define programming operation
          bclr    ckctl0                      ; CKCTL0=0 )
          bclr    ckctl1                      ; CKCTL1=0 ) define a 100 µs pulse
          bset    wdww                        ; WDWW=1 define 32-bit configuration
          bset    fwmset                      ; FWMSET=1 enable write mode
          mov     FCR,      fcrval            ; load FCR set up
;
; TEST VPP
;
          mov     fcrrd,    FCR               ; read FCR
          jnb     vppriv,   vpp_fail          ; test if VPP is high
;
```

```
; FLASH PROGRAMMING
;
prog:
          add     lpcnt,     #01h            ; increment the algo. loop counter
          cmp     lpcnt,     #MAXLOOP1       ; compare to the limit
          jmpr    cc_Z,      prg_fail        ; jump if limit has been reached
          mov     [addrev],datal             ; programming command, even word
          mov     [addrev],datah             ; programming command, odd word
waitpr:   mov     fcrrd,     FCR             ; read FCR
          jb      busy,      waitpr          ; jump if programming is not ended
;
; TEST VPP
;
          jb      fcvpp,     vpp_fail        ; jump if FCVPP is set, to know if
                                             ; a fail occured because VPP did not
                                             ; have the correct value during
                                             ; programming
;
; PROGRAM VERIFY MODE
;
          cmp     datal,     [addrev]        ; first instruction for PVM (even)
          calla   cc_UC,     wait4           ; time out 4 µs
          cmp     datal,     [addrev]        ; second instruction for PVM
          jmpr    cc_NZ,     prog            ; jump if the word is not correctly
                                             ; programmed, restart programming
          cmp     datah,     [addrod]        ; first instruction for PVM (odd)
          calla   cc_UC,     wait4           ; time out 4 µs
          cmp     datah,     [addrod]        ; second instruction for PVM
          jmpr    cc_NZ,     prog            ; jump if the word is not correctly
                                             ; programmed, restart programming
;
; EXIT OF WRITE MODE
;
          mov     fcrval,    #ALL0
          mov     FCR,       fcrval          ; reset FCR and exit write mode
          ret                                ; return to main program
```

```
; 16-BIT PROGRAMMING ROUTINE:  programming of address 0000Ch with 08642h
; ______________________________


bit16prg:
;
; REGISTERS INITIALIZATION
;
        mov     lpcnt,    #ALL0          ; reset algo. loop counter
        mov     fcrval,   #ALL0          ; reset FCR data value
        mov     unlock,   #UNLOCK        ; load unlock data
        mov     val10u,   #WAIT10        ; load 10 µs loop data
        mov     val4u,    #WAIT4         ; load 4 µs loop data
        mov     wait_cnt,#ALL0           ; reset wait loop counter
        mov     all1,     #ALL1          ; set R2 to FFFF
        mov     datal,    #DATAL         ; load data
        mov     addrev,   #ADDREV        ; load address
;
; UNLOCK SEQUENCE FOR ENTERING IN THE WRITE MODE
;
        mov     FCR,      unlock         ; first instruction
        mov     [unlock],unlock          ; second instruction of unlock
                                         ; sequence to enter into the write
                                         ; mode
        calla   cc_UC,    wait10         ; time out 10 µs to set internal
                                         ; signals
;
; FCR SET UP FOR PROGRAMMING
;
        bset    fwe                      ; FWE=1 define programming operation
        bclr    ckctl0                   ; CKCTL0=0 )
        bclr    ckctl1                   ; CKCTL1=0 ) define a 100 µs pulse
        bclr    wdww                     ; WDWW=0 define 16-bit configuration
        bset    fwmset                   ; FWMSET=1 enable program mode
        mov     FCR,      fcrval         ; load FCR set up
;
; TEST VPP
;
        mov     fcrrd,    FCR            ; read FCR
        jnb     vppriv,   vpp_fail       ; test if VPP is high
;
```

```
;
; FLASH PROGRAMMING
;
progw:
          add       lpcnt,      #01h              ; increment the algo. loop counter
          cmp       lpcnt,      #MAXLOOP1         ; compare to the limit
          jmpr      cc_Z,       prg_fail          ; jump if limit has been reached
          mov       [addrev], datal               ; programming command
waitprw:  mov       fcrrd,      FCR               ; read FCR
          jb        busy,       waitprw           ; jump if programming is not ended
;
; TEST VPP
;
          jb        fcvpp,      vpp_fail          ; jump if FCVPP is set, to know if
                                                  ; a fail occured because VPP did not
                                                  ; have the correct value during
                                                  ; programming
;
; PROGRAM VERIFY MODE
;
          cmp       datal,      [addrev]          ; first instruction for PVM
          calla     cc_UC,      wait4             ; time out 4 µs
          cmp       datal,      [addrev]          ; second instruction for PVM
          jmpr      cc_NZ,      progw             ; jump if the word is not correctly
                                                  ; programmed, restart programming
;
; EXIT OF WRITE MODE
;
          mov       fcrval,     #ALL0
          mov       FCR,        fcrval            ; reset FCR and exit write mode
          ret                                     ; return to main program
```

SUBROUTINES USED IN WRITING OPERATION

```
wait4:    add       wait_cnt,#01h                 ; increment counter
          cmp       wait_cnt,val4u                ; compare with final value
          jmpr      cc_NZ,      wait4             ; jump if not equal
          mov       wait_cnt,#ALL0                ; reset counter
          ret
```

```
wait10 : add        wait_cnt,#01h              ; increment counter
         cmp        wait_cnt,val10u            ; compare with final value
         jmpr       cc_NZ, wait10              ; jump if not equal
         mov        wait_cnt,#ALL0             ; reset counter
         ret

vpp_fail:
         ; VPP FAIL ROUTINE DEFINED BY THE USER
prg_fail:
         ; PROGRAM FAIL ROUTINE DEFINED BY THE USER
eras_fail:
         ; ERASE FAIL ROUTINE DEFINED BY THE USER
```

THE SOFTWARE INCLUDED IN THIS NOTE IS FOR GUIDANCE ONLY. SGS-THOMSON SHALL NOT BE HELD LIABLE FOR ANY DIRECT, INDIRECT OR CONSEQUENTIAL DAMAGES WITH RESPECT TO ANY CLAIMS ARISING FROM USE OF THE SOFTWARE.

SGS-THOMSON
MICROELECTRONICS

ΑΠΠΕΝΔΙΞ Ε

Εξαμπλε Βοοτ–Στραπ Λοαδερ φορ τηε ΣΤ10Φ166 ιν Σινγλε–Χηιπ Μοδε

ΙΝΤΡΟΔΥΧΤΙΟΝ

Ωιτη ιτσ ον–χηιπ Φλαση μεμορψ, τηε ΣΤ10Φ166 ισ τηε ιδεαλ δεϖιχε φορ προτοτψπινγ, πρεπροδυχτιον, μεδιυμ ϖολυμε προδυχτιον ορ ρεπρογραμμαβλε αππλιχατιονσ. Τηισ νοτε γιϖεσ αν εξαμπλε οφ τηε ιμπλεμεντατιον οφ αν ον–χηιπ λοαδερ φορ εντερινγ προγραμ ορ χοδε ιντο τηε Φλαση μεμορψ φορ α ΣΤ10Φ166 χονφιγυρεδ ιν σινγλε χηιπ μοδε (νο εξτερναλ μεμορψ).

Ωηεν τηε ΣΤ10Φ166 ισ χονφιγυρεδ ιν σινγλε χηιπ μοδε, τηε ΣΤ10Φ166 προγραμ ωιλλ σταρτ ατ αδδρεσσ 0000η οφ τηε μεμορψ σπαχε (ωιτηιν τηε ΦΛΑΣΗ μεμορψ). Τηερεφορε ιν τηε χασε οφ α τοταλλψ ερασεδ Φλαση μεμορψ, ορ ωηεν υπγραδινγ τηε χοδε ινσιδε τηε Φλαση μεμορψ, ανοτηερ μεανσ το σταρτ ανδ προγραμ τηε δεϖιχε μυστ βε υσεδ το πασσ ρουνδ τηε Φλαση μεμορψ.

Ον–Χηιπ Βοοτ–Στραπ Λοαδερ

Α ΡΟΜ αρεα οφ 256 βψτεσ εξιστσ ον τηε ΣΤ10Φ166 ιν αδδιτιον το τηε Φλαση μεμορψ ωηιχη χαν βε προγραμμεδ ασ τηε Φλαση μεμορψ βυτ νοτ ερασεδ. Τηισ ΡΟΜ αρεα ισ αχχεσσεδ ιν α σπεχιαλ μοδε τηατ ωιλλ βε δεταιλεδ ιν τηε φολλοωινγ σεχτιονσ.

Τηε Βοοτ–Στραπ Λοαδερ, δεφινεδ βψ τηε υσερ, μαψ βε προγραμμεδ ιντο τηισ ΡΟΜ αρεα αλλοωινγ τηε ΦΛΑΣΗ μεμορψ το βε λοαδεδ φρομ αν εξτερναλ σψστεμ. Τηισ ρεπρεσεντσ τηε ονλψ ωαψ το αχχεσσ τηε ιντερναλ ΡΑΜ ιν ορδερ το προγραμ τηε ΦΛΑΣΗ μεμορψ (ωηιχη χαν νοτ βε προγραμμεδ φρομ α προγραμ ωιτηιν τηε ΦΛΑΣΗ μεμορψ ιτσελφ). Τηισ ρουτινε ισ λοαδεδ ον τηε δεϖιχε ωιτη τηε Προγραμμινγ Βοαρδ προϖιδεδ βψ ΣΓΣ–ΤΗΟΜΣΟΝ Μιχροελεχτρονιχσ ανδ ισ νοτ αχχεσσιβλε φρομ ανψ οτηερ ιντερναλ ορ εξτερναλ μεμορψ.

Τηε φολλοωινγ εξαμπλε δεσχριβεσ τηε λοαδερ οφ α σηορτ προγραμ ανδ τηε τεχηνιθυε το αχχεσσ ιτ. Τηε λοαδερ ρεχειϖεσ δατα φρομ α ηοστ σψστεμ, ϖια τηε ΣΤ10Φ166 σεριαλ πορτ Π0, ιντο τηε ιντερναλ ΡΑΜ ανδ αφτερ ρεχειϖινγ α δεφινεδ νυμβερ οφ βψτεσ φυμπσ το α δεφινεδ ΡΑΜ αδδρεσσ εξεχυτινγ τηε λοαδεδ προγραμ. Οτηερ προγραμ φυνχτιοναλιτψ ισ ποσσιβλε. Ηοωεϖερ, τηε εξαμπλε προποσεδ ωιλλ βε συιταβλε φορ μοστ αππλιχατιονσ.

Αχχεσσ το τηε Βοοτ–Στραπ Λοαδερ

Ιν ορδερ το εξεχυτε τηε Βοοτ–Στραπ λοαδερ, τηε ΣΤ10Φ166 ηασ το βε φορχεδ ιντο τηε βοοτ–στραπ μοδε. Τηισ ισ δονε ωιτη α πυλλ υπ ρεσιστορ χοννεχτεδ το τηε ΑΛΕ πιν ωηιλε α ηαρδωαρε ρεσετ (ΡΣΤΙΝ) ισ αππλιεδ το τηε δεϖιχε. Τηισ ισ ποσσιβλε δυε το τηε φαχτ τηατ δυρινγ ρεσετ, ΑΛΕ πιν ισ υσεδ ασ αν ινπυτ ανδ ισ ιντερναλλψ πυλλεδ δοων τηρουγη α ωεακ πυλλδοων. Τηεν ωιτη τηε δεαχτιϖατιον οφ τηε ρεσετ, τηισ χονδιτιον ισ ιντερναλλψ λατχηεδ ανδ ιμμεδιατελψ τηε ΣΤ10Φ166 σταρτσ τηε εξεχυτιον οφ τηε ιντερναλ ρουτινε ωαιτινγ φορ τηε Βοοτ Στραπ τριγγερ χονδιτιον το ινϖοκε τηε Βοοτ–Στραπ ρουτινε.

Ιν τηισ εξαμπλε τηισ χονδιτιον ισ ΝΜΙ ιντερρυπτ αππλιεδ το τηε ΣΤ10Φ166 βεφορε τηε ιντερναλ ρουτινε ωιλλ ενδεδ. Ιφ τηε χονδιτιον ισ νοτ φυλφιλλεδ τηεν α σοφτωαρε ρεσετ ινστρυχτιον (ΣΡΣΤ) ισ εξεχυτεδ ανδ ασ τηε σινγλε χηιπ μοδε ισ σελεχτεδ τηρουγη τηε ΕΒΧ1, ΕΒΧ0 ανδ ΒΥΣΑΧΤ πινσ, τηε ΣΤ10Φ166 προγραμ ωιλλ σταρτ ατ αδδρεσσ 0000η οφ τηε Φλαση μεμορψ. Σινχε τηε ΦΛΑΣΗ μεμορψ ισ στιλλ υνπρογραμμεδ, υνεξπεχτεδ προγραμ εξεχυτιον ωιλλ οχχυρ.

Ιτ ισ ρεχομμενδεδ το εντερ τηε βοοτ–στραπ μοδε ωιτη ΕΒΧ1, ΕΒΧ0 γρουνδεδ, ΒΥΣΑΧΤ τιεδ το 1∀ ανδ ΑΛΕ πυλλεδ ηιγη δυε το τηε φαχτ τηατ τηε στατε οφ ΑΛΕ πιν ισ νοτ σαμπλεδ βψ α σοφτωαρε ρεσετ. Α ηαρδωαρε ρεσετ (ον ΡΣΤΙΝ) ωιλλ τηεν σταρτ τηε δεϖιχε ιν τηισ σπεχιαλ μοδε, ωηιχη ωιλλ ενδ ωιτη α σοφτωαρε ρεσετ το αδδρεσσ 0000η οφ τηε Φλαση μεμορψ.

Τηε ωινδοω φορ τηε αχτιϖατιον οφ ΝΜΙ ιντερρυπτ ισ αππροξιματελψ 1μσ το 10 μσ αφτερ τηε δεαχτιϖατιον οφ ΡΣΤΙΝ.

Φιγυρε Ε–1. ΣΤ10Φ166 Μοδε Φλοω

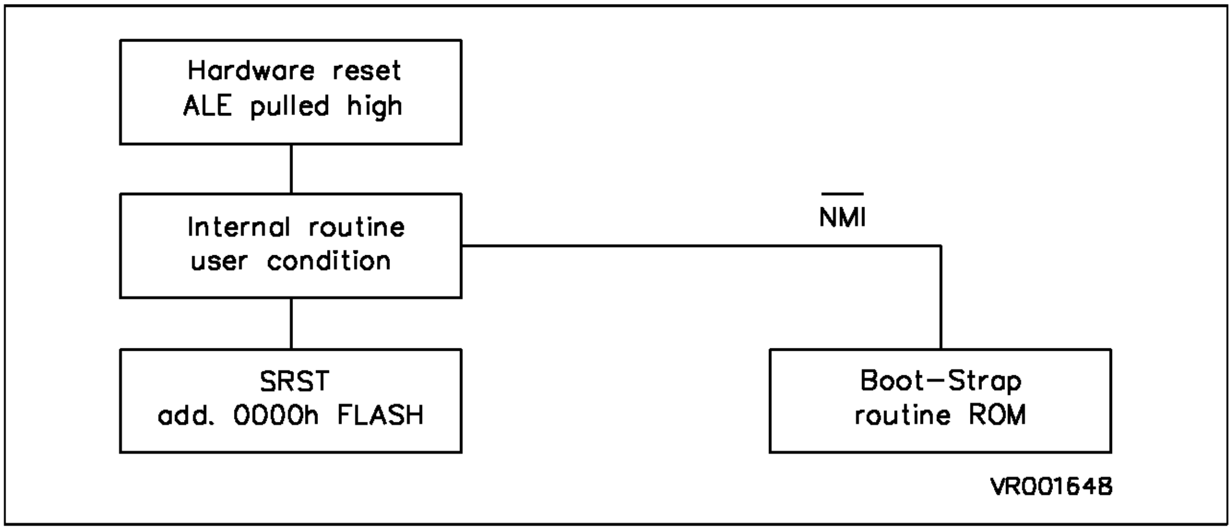

Οπερατιον οφ τηε εξαμπλε Βοοτ–Στραπ Λοαδερ

Ωηεν τηε Βοοτ–Στραπ Λοαδερ ισ ινϖοκεδ ωιτη τηε ΝΜΙ ιντερρυπτ, φιρστ τηε ΣΤ10Φ166 ισ ινιτιαλιζεδ (ΩΔΤ δισαβλεδ, ΣΨΣΧΟΝ σετ, ΧΠ, ΣΠ). Τηεν τηε δεϖιχε ωαιτσ φορ τηε ρεχεπτιον οφ 00 βψτε ατ πιν ΡξΔ0. Τηισ βψτε (8 βιτ δατα, νο παριτψ, ονε στοπ βιτ ανδ α στανδαρδ βαυδ ρατε: 9600 Βαυδ ορ λεσσ) ισ σεντ βψ τηε χοννεχτεδ ηοστ. Τηε τιμε λενγτη οφ τηεσε 9 0 βιτσ ισ μεασυρεδ ανδ υσεδ το χαλχυλατε τηε πρεσχαλερ φορ τηε βαυδ ρατε γενερατορ. Σεριαλ πορτ 0 ισ τηεν ινιτιαλιζεδ, ανδ τηε αχκνοωλεδγε βψτε 55η ισ τρανσμιττεδ το τηε ηοστ το χονφιρμ τηατ τηε χομμυνιχατιον ισ προπερλψ εσταβλισηεδ.

Τηε ρουτινε εξεχυτεσ τηεν α λοοπ, ωαιτινγ φορ 960 βψτεσ ϖια πορτ Π0. Τηεσε βψτεσ αρε στορεδ χονσεχυτιϖελψ ιντο τηε ιντερναλ ΡΑΜ, σταρτινγ φρομ αδδρεσσ 0ΦΑ40η. Αφτερ τηατ τηε λοοπ ισ εξιτεδ, ανδ α φυμπ το αδδρεσσ 0ΦΑ40η ισ περφορμεδ. Τηε δατα στορεδ ιν ΡΑΜ ισ τηεν εξεχυτεδ ασ προγραμ χοδε. Τηισ προγραμ, δετερμινεδ βψ τηε υσερ, μαψ αλλοω τηε φυλλ δοωνλοαδ ανδ προγραμμινγ οφ φυρτηερ χοδε ορ δατα ιντο τηε ΦΛΑΣΗ μεμορψ.

Ιν συμμαρψ, τηισ προχεδυρε ρεθυιρεσ τηε φολλοωινγ αχτιονσ φρομ τηε ηοστ σψστεμ:

1. Σενδ α ζερο βψτε (8 βιτ δατα, νο παριτψ, ονε στοπ βιτ, στανδαρδ βαυδ ρατε)
2. Ωαιτ φορ ανδ ϖεριφψ τηε αχκνοωλεδγε βψτε 55η
3. Τρανσμιτ 960 βψτεσ

Ιφ λεσσ τηαν 960 βψτεσ αρε νεεδεδ φορ τηε προγραμ χοδε, τηε ηοστ ηασ το τρανσμιτ δυμμψ δατα το φιλλ τηε φρεε βψτεσ, σινχε τηε λοοπ ωιλλ νοτ τερμινατε υντιλ 960 βψτεσ αρε ρεχειϖεδ.

Ωηεν τηε Βοοτ–Στραπ ρουτινε ισ υσεδ το λοαδ αδδιτιοναλ προγραμ ιν τηε ιντερναλ ΡΑΜ, χαρε μυστ βε τακεν ωιτη τηε πηψσιχαλ αδδρεσσεσ ανδ νεχεσσαρψ ρεσουρχεσ οφ τηε ιντερναλ ΡΑΜ, σπαχε μυστ βε ρεσερϖεδ φορ ρεγιστερ βανκσ, σταχκ αρεα ανδ ϖαριαβλεσ.

Τηε Βοοτ Στραπ μοδε μυστ βε εξιτεδ φρομ βψ εξεχυτινγ αν ΣΡΣΤ ινστρυχτιον.

ΩΑΡΝΙΝΓ: Ιφ τηε ΦΛΑΣΗ μεμορψ προτεχτιον ηασ βεεν εναβλεδ ωιτη τηε προγραμμινγ βοαρδ, ιτ ισ νεχεσσαρψ το φιρστ δισαβλε τηε προτεχτιον υσινγ τηε ΡΠΡΟΤ βιτ οφ ΦΧΡ ιν τηε λοαδεδ προγραμ. Τηισ ισ το αλλοω τηε ινιτιαλ σοφτωαρε ρουτινεσ ιν τηε ΡΑΜ το προγραμ ανδ ερασε τηε ΦΛΑΣΗ μεμορψ.

Φιγυρε Ε–2. Βοοτ–Στραπ Λοαδερ Οπερατιον

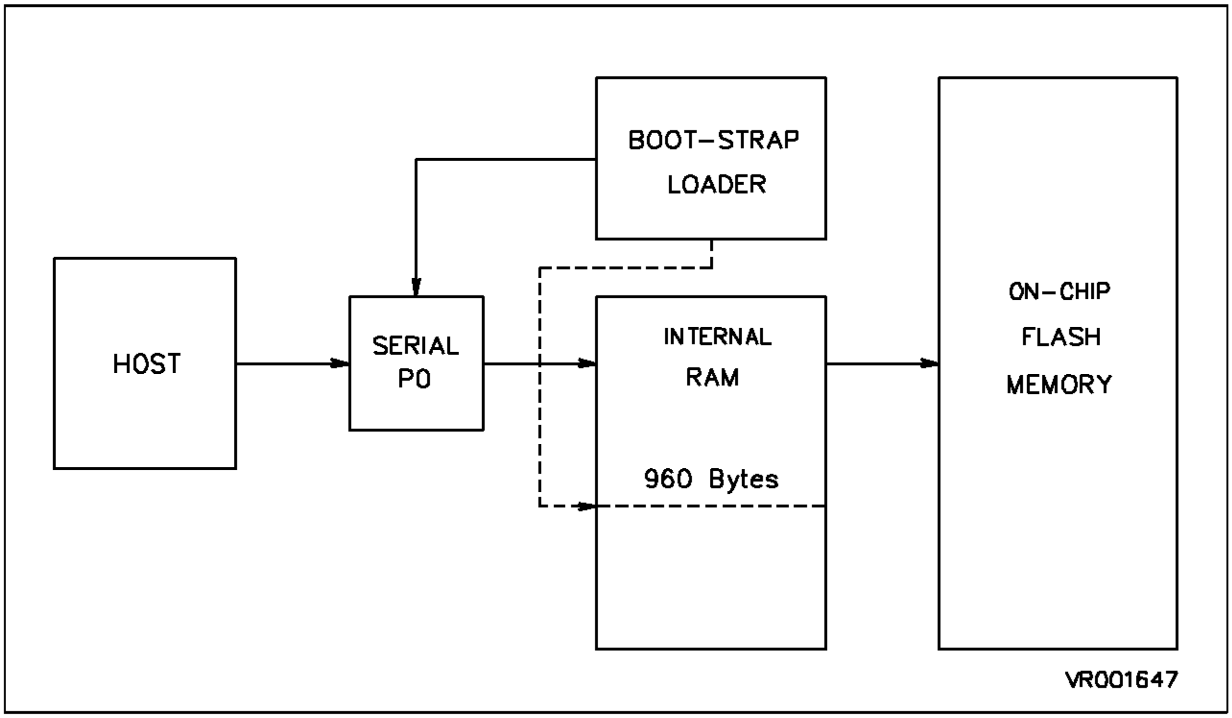
BOOT–STRAP
LOADER
HOST
SERIAL
P0
INTERNAL
RAM
960 Bytes
ON–CHIP
FLASH
MEMORY
VR001647

Φιγυρε Ε–3. Ασσεμβλερ Εξαμπλε

```
TOS                 equ       0FA40h              ; Top of stack, 64 bytes max
StartAddress        equ       0FA40h              ; Start Address of RAM area
EndAddress          equ       0FDFFh              ; End Address of RAM area
RamRoutineStart     equ near  0FA40h              ; Start Address of RAM routine


REGBAS              equ       0FA00h              ; Register bank declaration
                    sskdef    0                   ; Stack reservation

BTLCODE             section   code

BTL_INIT:
                    MOV       SYSCON,#SYSCNF      ; initialize system
                                                  ; configuration register
                                                  ; SYSCNF Defined by the user
                    DISWDT                        ; disable watchdog timer
                    MOV       CP,#REGBAS          ; set register bank
                    MOV       SP,#TOS             ;set stack pointer
```

Ασσεμβλερ Εξαμπλε (Χοντδ)

```
GetBaudRate:
WaitStartBit:
            JB      P3.11,WaitStartBit      ; wait for start bit at RXD0
            BSET    T6R                     ;start timer T6
WaitStopBit:
            JNB     P3.11,WaitStopBit       ; wait for stop bit at RXD0
            BCLR    T6R                     ;stop timer T6
            MOV     R1,#36                  ; load divide factor
            MOV     MDL,T6                  ; baudrate = ((T6/36)/2)-1
            DIVU    R1
            MOV     R2,MDL                  ; get division result
            ROR     R2,#1                   ; round result
            JMPR    CC_C,InitSerialPort
            SUB     R2,#1                   ; adjust by one for baud
                                            ; rate generator
InitSerialPort:
            MOV     S0BG,R2                 ; load baudrate generator
            BSET    P3.10                   ; initialize TXD0 output
            BSET    DP3.10
            MOV     S0CON,#8011h            ; initialize serial port 0:
                                            ; 8bit data,no parity,one stop bit
                                            ; receiver enabled
SendAcknowledge:
            MOV     S0TBUF,#55h             ; send acknowledge byte
                                            ; for baudrate check
ReceiveData:
            MOV     R0,#StartAddress
ReceiveLoop:
            JNB     S0RIR,ReceiveLoop       ; wait for receive interrupt request
            MOVB    [R0],S0RBUF             ; store received byte
            BCLR    S0RIR                   ;clear receive interrupt request bit
            CMPI1   R0,#EndAddress          ; all bytes received ?
            JMPR    CC_NE,ReceiveLoop       ;if not continue loop
            JMPA    CC_UC,RamRoutineStart   ; yes: jump to RAM routine

BTLCODE ENDS
            END
```

APPENDIX F

DATASHEET OVERVIEW

This Appendix presents an overview of the ST10x166 product range:

ST10F166	: 16 BIT MCU WITH 256K FLASH MEMORY AND A/D CONVERTER
ST10166	: 16 BIT MCU WITH 32K INTERNAL ROM AND A/D CONVERTER
ST10R166	: 16 BIT MCU WITH A/D CONVERTER, ROMLESS

SGS-THOMSON
MICROELECTRONICS

ST10F166

16 BIT MCU WITH 256K FLASH MEMORY AND A/D CONVERTER

ADVANCE DATA

- High-Performance 16-bit CPU with 4-Stage Pipeline
- 100ns Instruction Cycle Time at 20MHz CPU Clock
- 500ns Multiplication (16x16 bits), 1µs Division (32/16 bits)
- Enhanced Boolean Bit Manipulation Facilities
- Register-Based Design with Multiple Variable Register Banks
- Single-Cycle Context Switching Support
- 256 Kbyte Linear Address Space for Code and Data
- 1Kbyte On-Chip RAM
- **32 KBYTE ON-CHIP FLASH MEMORY WITH BANK ERASE**
- 512 byte On-Chip Special Function Register Area
- 8-Channel Interrupt-Driven Single-Cycle Data Transfer Facilities via Peripheral Event Controller (PEC)
- 16-Priority-Level Interrupt System
- 10-Channel 10-bit A/D Converter with 9.75µs Conversion Time
- 16-Channel Capture/Compare Unit
- 2 Multi-Functional General Purpose Timer Units
- 2 Serial Channels (USARTs)
- Programmable Watchdog Timer
- 76 General Purpose I/O Lines
- Temperature Range: 0 to 70 °C, -40 to 85 °C, -40 to 110 °C)
- 1.2 micron multifunctional CMOS technology
- 100 Pin Metric Plastic Quad Flat Pack (PQFP) Rectangular Package
- **FLASH MEMORY PROTECTION OPTIONAL**

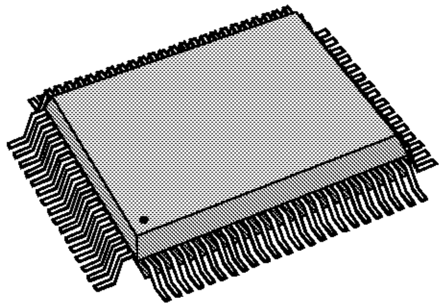

PQFP100

(Ordering Information at the end of the datasheet)

A complete set of development tools is also available including:

- 'C'-Compiler
- Assembler, Linker/Locater
- Librarian
- Emulator
- Flash Programming Board
- Starter Kit

January 1992

This is advance information from SGS-THOMSON. Details are subject to change without notice.

Figure 1. ST10F166 Pin Configuration

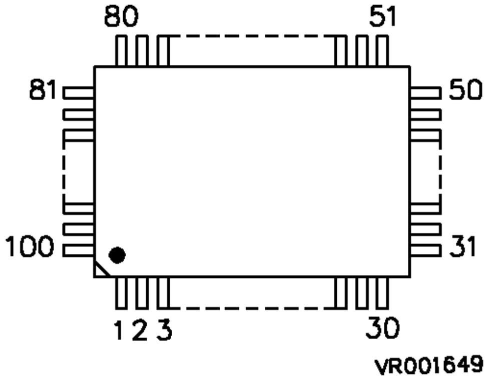

Table 1. PINOUT Description ST10F166

Pin number	Pin name	Pin number	Pin name	Pin number	Pin name	Pin number	Pin name
1	P0.3	31	P1.1	51	P5.3	81	P3.1
2	P0.4	32	P1.2	52	P5.4	82	P3.2
3	P0.5	33	P1.3	53	P5.5	83	P3.3
4	P0.6	34	P1.4	54	VAREF	84	P3.4
5	P0.7	35	P1.5	55	VAGND	85	P3.5
6	VSS	36	P1.6	56	P5.6	86	P3.6
7	VCC	37	P1.7	57	P5.7	87	P3.7
8	P0.8	38	VCC	58	P5.8	88	P3.8
9	P0.9	39	VSS	59	P5.9	89	P3.9
10	P0.10	40	P1.8	60	VSS	90	P3.10
11	P0.11	41	P1.9	61	VCC	91	P3.11
12	P0.12	42	P1.10	62	P2.0	92	P3.12
13	P0.13	43	P1.11	63	P2.1	93	VCC
14	P0.14	44	P1.12	64	P2.2	94	VSS
15	P0.15	45	P1.13	65	P2.3	95	P3.13
16	P4.0	46	P1.14	66	P2.4	96	P3.14
17	P4.1	47	P1.15	67	P2.5	97	P3.15
18	VCC	48	P5.0	68	P2.6	98	P0.0
19	XTAL2	49	P5.1	69	P2.7	99	P0.1
20	XTAL1	50	P5.2	70	P2.8	100	P0.2
21	VSS			71	P2.9		
22	$\overline{\text{BUSACT}}$			72	P2.10		
23	EBC1/VPP			73	P2.11		
24	EBC0			74	P2.12		
25	ALE			75	P2.13		
26	$\overline{\text{RD}}$			76	P2.14		
27	$\overline{\text{RSTIN}}$			77	P2.15		
28	$\overline{\text{RSTOUT}}$			78	VSS		
29	$\overline{\text{NMI}}$			79	VCC		
30	P1.0			80	P3.0		

ABSOLUTE MAXIMUM RATINGS

Ambient temperature under bias (T_A)	0 to + 70 °C
Storage temperature (T_{ST})	- 65 to + 125 °C
Supply Voltage (V_{CC})	+ 6.5 V
Input Voltage (V_{IN} min. = -3.0 V for pulse width less than 15ns)	- 0.5 to VCC + 0.5 V
V_{PP} Voltage	-0.6 to 13.5V

Note: Stresses above those listed under “Absolute Maximum Ratings” may cause permanent damage to the device. This is a stress rating only and functional operation of the device at these or any other conditions above those indicated in the operational sections of this specification is not implied.
Exposure to absolute maximum rating conditions for extended periods may affect device reliability.

Note: The ST10F166 is also offered in the temperature range -40° to 105°C and -40° to 85°C.
All the following time specifications refer to a CPU clock of 20MHz which is identical to an oscillator frequency (f_{OSC}) of 40MHz.

DC CHARACTERISTICS

T_A = 0 to + 70 °C; V_{CC} = 5 V ± 10%; V_{SS} = 0 V

Symbol	Parameter	Limit Values		Unit	Test Condition
		min.	max.		
V_{IL}	Input Low Voltage	- 0.5	0.2 V_{CC} - 0.1	V	-
V_{IH}	Input High Voltage (all except $\overline{\text{RSTIN}}$ and XTAL1)	0.2 V_{CC} + 0.9	V_{CC} + 0.5	V	-
V_{IH1}	Input High Voltage $\overline{\text{RSTIN}}$	0.6 V_{CC}	V_{CC} + 0.5	V	-
V_{IH2}	Input High Voltage XTAL1	0.7 V_{CC}	V_{CC} + 0.5	V	-
V_{OL}	Output Low Voltage (Ports 0, 1, 4, ALE, $\overline{\text{RD}}$, $\overline{\text{WR}}$, $\overline{\text{BHE}}$, CLKOUT, $\overline{\text{RSTOUT}}$	-	0.4	V	I_{OL} = 2.4mA
V_{OL1}	Output Low Voltage (all other outputs)	-	0.4	V	I_{OL1} = 1.6mA
V_{OH}	Output High Voltage (Ports 0, 1, 4, ALE, $\overline{\text{RD}}$, $\overline{\text{WR}}$, $\overline{\text{BHE}}$, CLKOUT, $\overline{\text{RSTOUT}}$)	0.9 V_{CC} 2.4	-	V	I_{OH} = - 100µA I_{OH} = - 2.4mA
V_{OH1}	Output High Voltage (all other outputs)	0.9 V_{CC} 2.4	–	V V	I_{OH} = - 50µA I_{OH} = - 1.6mA
I_{OZ}	Input Leakage Current (Ports 0, 1,2,3,4, $\overline{\text{NMI}}$, EBC0, $\overline{\text{BUSACT}}$)	-	±1	mA	0 V<V_{in}<V_{CC}
I_{PPS}	Vpp leakage Current (EBC1/Vpp)		±10	mA	V_{PP} < V_{CC}

DC Characteristics (Continued)

Symbol	Parameter	Limit Values		Unit	Test Condition
		min.	max.		
R_{RST}	Reset Pullup Resistor	50	150	kΩ	-
I_{IL}	XTAL1 Input Current	-	tbd	µA	$0\ V < V_{in} < V_{CC}$
C_{IO}	Pin Capacitance (digital inputs/outputs)	-	10	pF	f= 1MHz T_A = 25 °C
I_{CC1}	Power Supply Current	-	240	mA	1/TCL = 40MHz
I_{ID}	Idle Mode Supply Current	-	25	mA	1/TCL = 40MHz
I_{PD}	Power Down Mode Supply Current	-	150	µA	V_{CC} = 2.5 V 1)
I_{CC2}	V_{CC} writing current	-	240	mA	1/TCL = 40MHz 32 bit programming
I_{PP1}	V_{PP} read current	-	200 ±10	µA	$V_{PP} > V_{CC}$ $V_{PP} < V_{CC}$
I_{PP2}	V_{PP} writing current		50	mA	1/TCL = 40MHz 32 bit programming V_{PP} = 12V
V_{PP}	V_{PP} durint write/read op.	11.4	12.6	V	

A/D CONVERTER CHARACTERISTICS

T_A = 0 to + 70 °C; V_{CC} = 5 V ± 10%; V_{SS} = 0 V; V_{AREF} = V_{CC} ± 0.2 V; V_{AGND} = V_{SS} ± 0.2 V

Symbol	Parameter	Limit Values		Unit	Test Condition
		min.	max.		
V_{AIN}	Analog Input Voltage	V_{SS} - 0.2	VCC + 0.2	V	-
C_I	Analog Input Capacitance	-	70	pF	-
t_S	Sample Time	-	63 TCL		2)
t_C	Conversion Time	-	390 TCL		3)
TUE	Total Unadjusted Error	-	±2	LSB	-
I_{REF}	V_{AREF} Supply Current	-	5	mA	4)
I_{AIN}	Analog Input Current	±500		nA	5)

Notes:

1) This parameter is tested including leakage currents. All inputs (including pins configured as inputs) at 0 V to 0.1 V or at V_{CC} - 0.1 V to V_{CC}, V_{REF} = 0 V, all outputs (including pins configured as outputs) disconnected.

2) This parameter specifies the time during which the input capacitance C_I can be charged/decharged by the external source. It must be guaranteed, that the input capacitance C_I is fully loaded within these 63 TCLs. 63 TCL is 1.575µs at 20MHz CPU clock. After the end of the sample time t_S, changes of the analog input voltage have no effect on the conversion result.

3) This parameter includes the sample time t_S. 390 TCL is 9.75µs at 20MHz CPU clock.

4) I_{REF} in Power Down Mode: TBD

5) This parameter specifies the static input current for an analog input channel, e.g. when the channel is not selected for conversion.

AC CHARACTERISTICS

Testing Waveforms

Figure 8. Input Output Waveforms

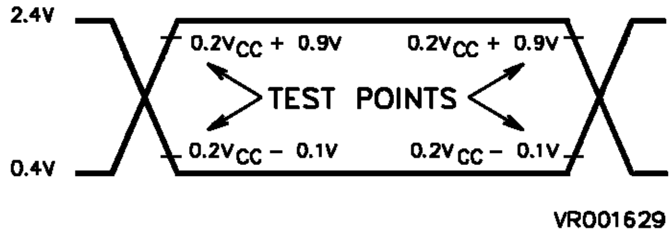
2.4V
0.4V
0.2VCC + 0.9V
0.2VCC + 0.9V
TEST POINTS
0.2VCC − 0.1V
0.2VCC − 0.1V
VR001629

AC Inputs during testing are driven at 2.4 V for a logic ’1’ and 0.4 V for a logic ’0’.

Timing measurements are made at V_{IH} min for a logic ’1’ and V_{IL} max for a logic ’0’.

Figure 9. Float Waveforms

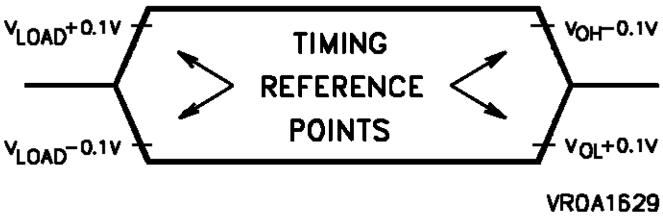
VLOAD+0.1V
VLOAD−0.1V
TIMING
REFERENCE
POINTS
VOH−0.1V
VOL+0.1V
VR0A1629

For timing purposes a port pin is no longer floating when a 100mV change from load voltage occurs, but begins to float when a 100mV change from the loaded V_{OH}/V_{OL} level occurs (I_{OH}/I_{OL}=20mA)

AC CHARACTERISTICS (Continued)

In the AC Characteristics waveforms, the mid-point of a signal transition is mostly used as the timing reference point.

If not specifically specified in the drawings, the exact timing reference points are given by the parameter description according to the following figures (test voltage levels and float state references shown on previous page):

Figure 10. Timing Reference Points

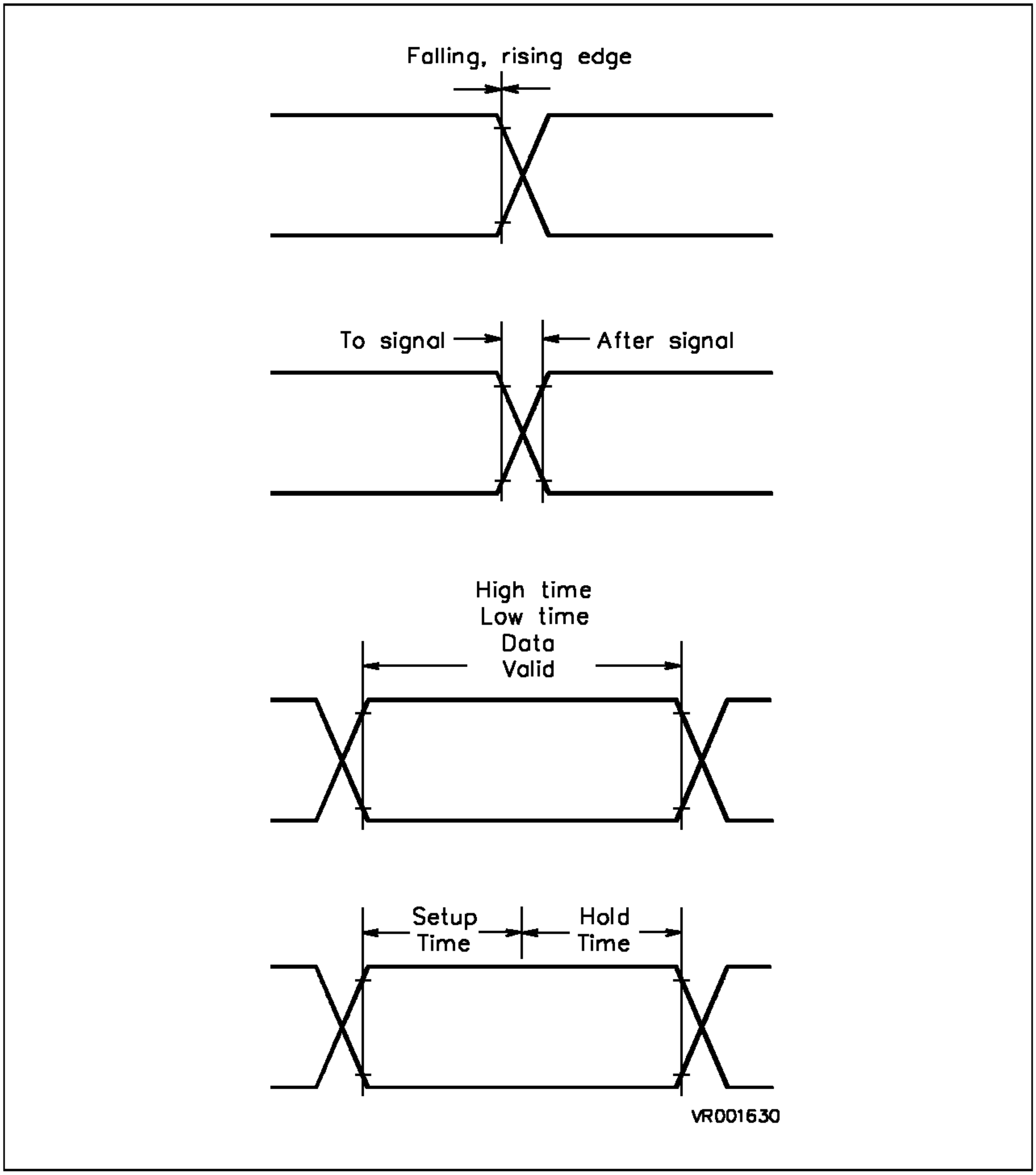
Falling, rising edge
To signal
After signal
High time
Low time
Data
Valid
Setup
Time
Hold
Time
VR001630

AC CHARACTERISTICS (Continued)

External Clock Drive XTAL1

T_A=0 to + 70°C; V_{CC}=5 V ± 10%; V_{SS}=0 V

Symbol	Parameter	CPU Clock 20MHz		Variable TIming 1/TCL = 2 to 40MHz		Unit
		min.	max.	min.	max.	
TCL	Oscillator Period	25	25	25	500	ns
t_1	High Time	6	-	6	-	ns
t_2	Low TIme	6	-	6	-	ns
t_3	Rise TIme	_	5	-	5	ns
t_4	Fail Time	_	5	-	5	ns

Figure 11. External Clock Drive XTAL1

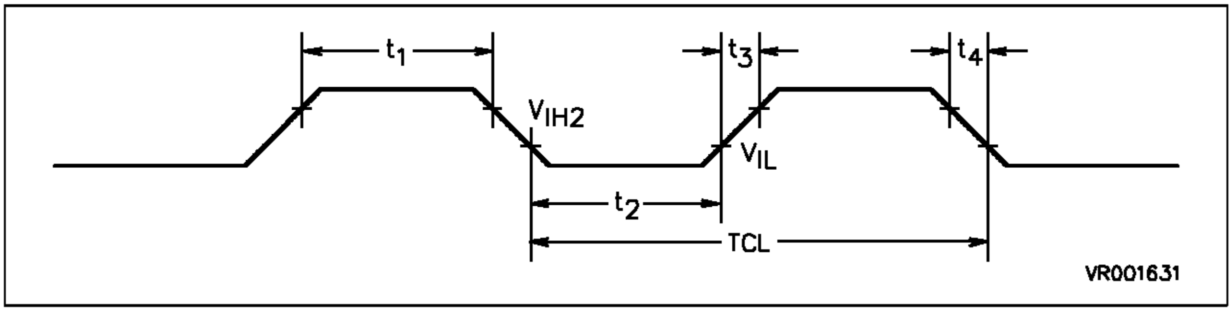

AC CHARACTERISTICS (Continued)

CLKOUT and $\overline{\text{READY}}$

T_A=0 to + 70°C; V_{CC}=5 V ± 10%; V_{SS}=0 V;
C_L (for Ports 0, 1 and 4, ALE, $\overline{\text{RD}}$, $\overline{\text{WR}}$, $\overline{\text{BHE}}$, CLKOUT)=100pF

Symbol	Parameter	CPU Clock 20MHz		Variable Timing 1/TCL = 2 to 40MHz		Unit
		min.	max.	min.	max.	
t_{29}	CLKOUT Cycle Time	50	50	2TCL	2TCL	ns
t_{30}	CLKOUT High Time	15	-	TCL - 10	-	ns
t_{31}	CLKOUT Low Time	15	-	TCL - 10	-	ns
t_{32}	CLKOUT Rise TIme	-	5	-	5	ns
t_{33}	CLKOUT Fall Time	-	5	-	5	ns
t_{34}	ALE Rising to CLKOUT Falling Edge	0	10	0	10	ns
t_{35}	Synchronous $\overline{\text{READY}}$ Setup Time to CLKOUT	10	-	10	-	ns
t_{36}	Synchronous $\overline{\text{READY}}$ Hold Time to CLKOUT	10	-	10	-	ns
t_{37}	Asynchronous $\overline{\text{READY}}$ Hold TIme	65	-	2TCL + 15	-	ns

Figure 12. CLKOUT and $\overline{\text{READY}}$

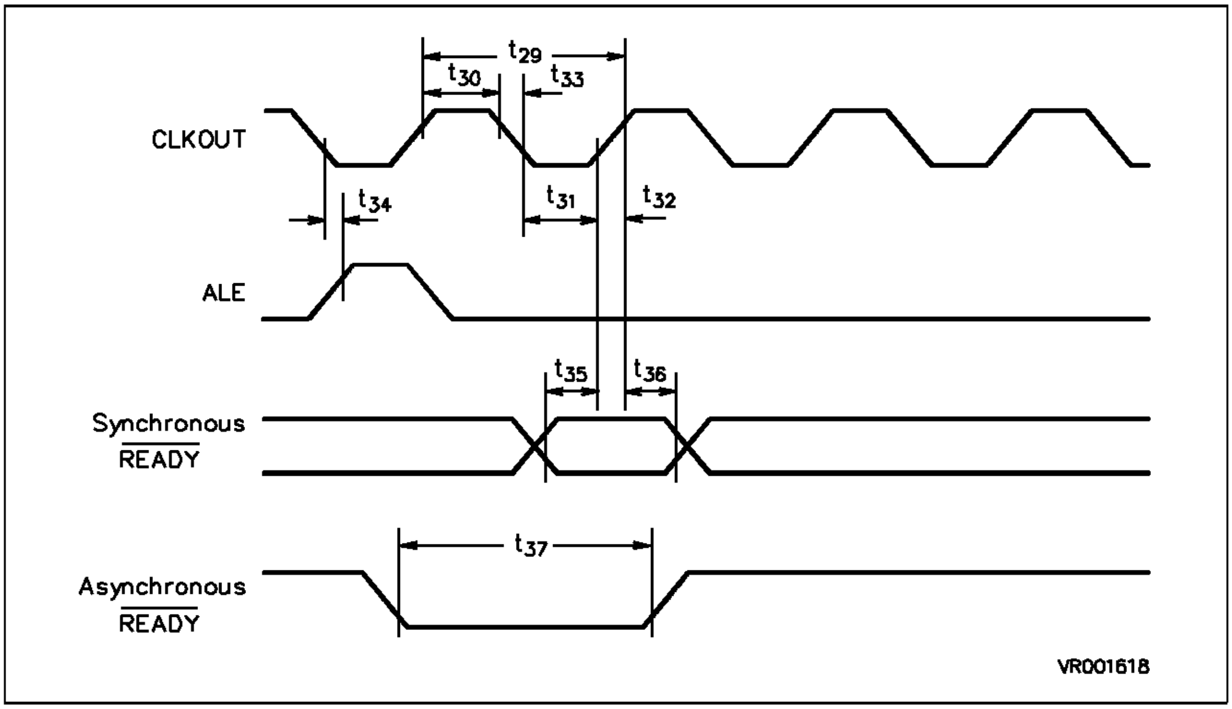
t29
t30
t33
CLKOUT
t34
t31
t32
ALE
t35
t36
Synchronous
READY
t37
Asynchronous
READY
VR001618

AC CHARACTERISTICS (Continued)

Multiplexed Bus with Read/Write Delay

T_A=0 to + 70°C; V_{CC}=5 V ± 10%; V_{SS}=0 V;
C_L (for Ports 0, 1 and 4, ALE, $\overline{\text{RD}}$, $\overline{\text{WR}}$, $\overline{\text{BHE}}$, CLKOUT)=100pF
ALE cycle time = 6TCL (150ns at 20MHz CPU clock)

Symbol	Parameter	CPU Clock 20MHz		Variable Timing 1/TCL = 2 to 40MHz		Unit
		min.	max.	min.	max.	
t_5	ALE High Time	15	-	TCL - 10	-	ns
t_6	Address Setup to ALE	10	-	TCL - 15	-	ns
t_7	Address Hold after ALE	15	-	TCL - 10	-	ns
t_8	ALE Falling Edge to $\overline{\text{RD}}$, $\overline{\text{WR}}$	15	-	TCL - 10	-	ns
t_{10}	Address Float after $\overline{\text{RD}}$, $\overline{\text{WR}}$	-	5	-	5	ns
t_{12}	$\overline{\text{RD}}$, $\overline{\text{WR}}$ Low Time	40	-	2TCL - 10	-	ns
t_{14}	$\overline{\text{RD}}$ to Valid Data In	-	35	-	2TCL - 15	ns
t_{16}	ALE Low to Valid Data In	-	60	-	3TCL - 15	ns
t_{17}	Address to Valid Data In	-	75	-	4TCL - 25	ns
t_{18}	Data Hold after $\overline{\text{RD}}$ Rising Edge	0	-	0	-	ns
t_{19}	Data Float after $\overline{\text{RD}}$	-	35	-	2TCL - 15	ns
t_{22}	Data Valid to $\overline{\text{WR}}$	35	-	2TCL - 15	-	ns
t_{23}	Data Hold after $\overline{\text{WR}}$	35	-	2TCL - 15	-	ns
t_{25}	ALE rising edge after $\overline{\text{RD}}$, $\overline{\text{WR}}$	35	-	2TCL - 15	-	ns
t_{27}	Address Hold after $\overline{\text{RD}}$, $\overline{\text{WR}}$	35	-	2TCL - 15	-	ns

Figure 13. External Memory Read Cycle

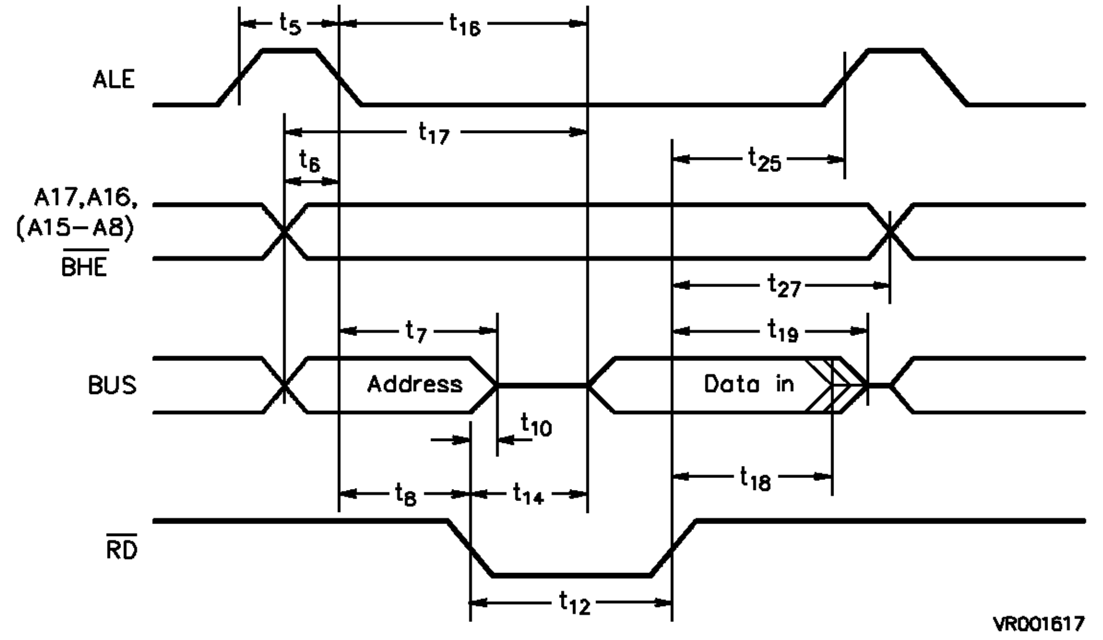
t5
t16
ALE
t17
t6
t25
A17,A16,
(A15–A8)
BHE
t27
t7
t19
BUS
Address
Data in
t10
t18
t8
t14
RD
t12
VR001617

Figure 14. External Memory Write Cycle

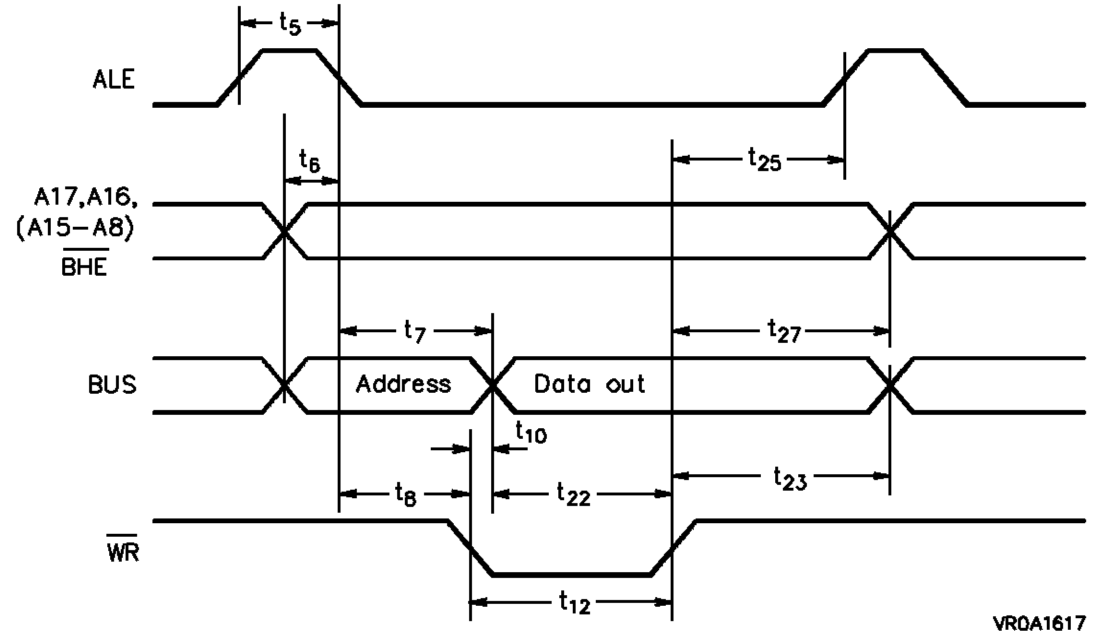
t5
ALE
t6
t25
A17,A16,
(A15–A8)
BHE
t7
t27
BUS
Address
Data out
t10
t8
t22
t23
WR
t12
VR0A1617

AC CHARACTERISTICS (Continued)

Multiplexed Bus without Read/Write Delay

T_A=0 to + 70°C; V_{CC}=5 V ± 10%; V_{SS}=0 V;
C_L (for Ports 0, 1 and 4, ALE, $\overline{RD}$, $\overline{WR}$, $\overline{BHE}$, CLKOUT)=100pF
ALE cycle time = 6TCL (150ns at 20MHz CPU clock)

Symbol	Parameter	CPU Clock 20MHz		Variable Timing 1/TCL = 2 to 40MHz		Unit
		min.	max.	min.	max.	
t_5	ALE High Time	15	-	TCL - 10	-	ns
t_6	Address Setup to ALE	10	-	TCL - 15	-	ns
t_7	Address Hold after ALE	15	-	TCL - 10	-	ns
t_9	ALE Falling Edge to $\overline{RD}$, $\overline{WR}$	- 10	-	- 10	-	ns
t_{11}	Address Float after $\overline{RD}$, $\overline{WR}$	-	30	-	TCL + 5	ns
t_{13}	$\overline{RD}$, $\overline{WR}$ Low Time	65	-	3TCL - 30	-	ns
t_{15}	$\overline{RD}$ to Valid Data In	-	60	-	3TCL - 15	ns
t_{16}	ALE Low to Valid Data In	-	60	-	3TCL - 15	ns
t_{17}	Address to Valid Data In	-	75	-	4TCL - 25	ns
t_{18}	Data Hold after $\overline{RD}$ Rising Edge	0	-	0	-	ns
t_{19}	Data Float after $\overline{RD}$	-	35	-	2TCL - 15	ns
t_{22}	Data Valid to $\overline{WR}$	35	-	2TCL - 15	-	ns
t_{23}	Data Hold after $\overline{WR}$	35	-	2TCL - 15	-	ns
t_{25}	ALE rising edge after $\overline{RD}$, $\overline{WR}$	35	-	2TCL - 15	-	ns
t_{27}	Address Hold after $\overline{RD}$, $\overline{WR}$	35	-	2TCL - 15	-	ns

Figure 15. External Memory Read Cycle

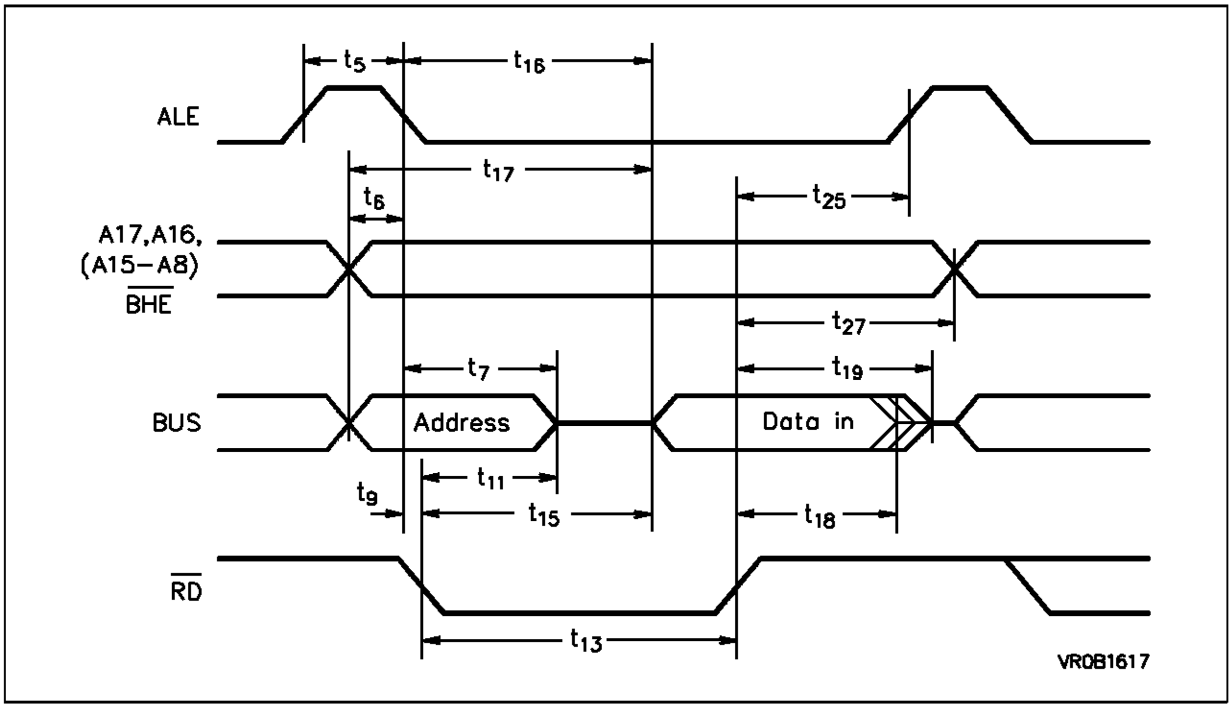

ALE
A17,A16,
(A15–A8)
$\overline{BHE}$
BUS
$\overline{RD}$
t_5
t_{16}
t_{17}
t_6
t_{25}
t_{27}
t_7
t_{19}
Address
Data in
t_{11}
t_9
t_{15}
t_{18}
t_{13}
VR0B1617

Figure 16. External Memory Write Cycle

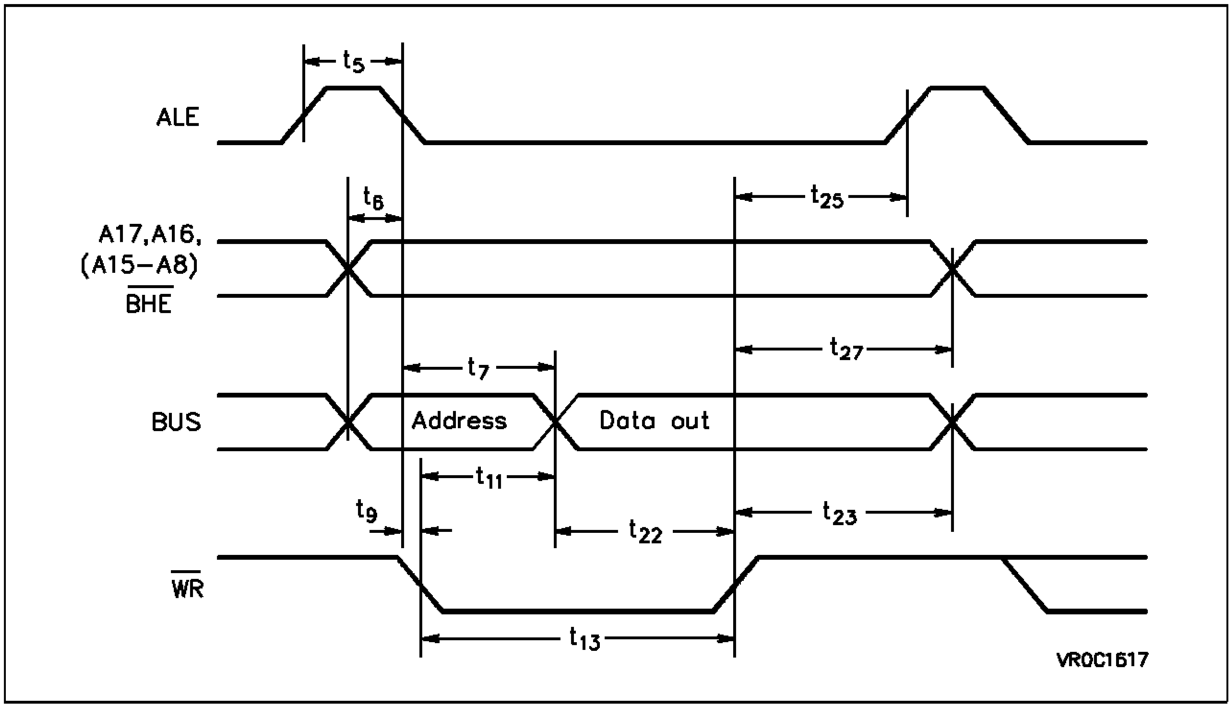

ALE
A17,A16,
(A15–A8)
$\overline{BHE}$
BUS
$\overline{WR}$
t_5
t_6
t_{25}
t_{27}
t_7
Address
Data out
t_{11}
t_9
t_{22}
t_{23}
t_{13}
VR0C1617

AC CHARACTERISTICS (Continued)

Non-Multiplexed Bus with Read/Write Delay

T_A=0 to + 70°C; V_{CC}=5 V ± 10%; V_{SS}=0 V;
C_L (for Ports 0, 1 and 4, ALE, $\overline{\text{RD}}$, $\overline{\text{WR}}$, $\overline{\text{BHE}}$, CLKOUT)=100pF
ALE cycle time = 4TCL (100ns at 20MHz CPU clock)

Symbol	Parameter	CPU Clock 20MHz		Variable Timing 1/TCL = 2 to 40MHz		Unit
		min.	**max.**	**min.**	**max.**	
t_5	ALE High Time	15	-	TCL - 10	-	ns
t_6	Address Setup to ALE	10	-	TCL - 15	-	ns
t_8	ALE Falling Edge to $\overline{\text{RD}}$, $\overline{\text{WR}}$	15	-	TCL - 10	-	ns
t_{12}	$\overline{\text{RD}}$, $\overline{\text{WR}}$ Low Time	40	-	2TCL - 10	-	ns
t_{14}	$\overline{\text{RD}}$ to Valid Data In	-	35	-	2TCL - 15	ns
t_{16}	ALE Low to Valid Data In	-	60	-	3TCL - 15	ns
t_{17}	Address to Valid Data In	-	75	-	4TCL - 25	ns
t_{18}	Data Hold after $\overline{\text{RD}}$ Rising Edge	0	-	0	-	ns
t_{20}	Data Float after $\overline{\text{RD}}$ *)	-	35	-	2TCL - 15	ns
t_{22}	Data Valid to $\overline{\text{WR}}$	35	-	2TCL - 15	-	ns
t_{24}	Data Hold after $\overline{\text{WR}}$	15	-	TCL - 10	-	ns
t_{26}	ALE rising edge after $\overline{\text{RD}}$, $\overline{\text{WR}}$	- 10	-	- 10	-	ns
t_{28}	Address Hold after $\overline{\text{RD}}$, $\overline{\text{WR}}$	0	-	0	-	ns

*) This time may be longer if no external bus conflict can occur. For example, this requirement is always met if only code but no data are accessed externally.

Figure 17. External Memory Read Cycle

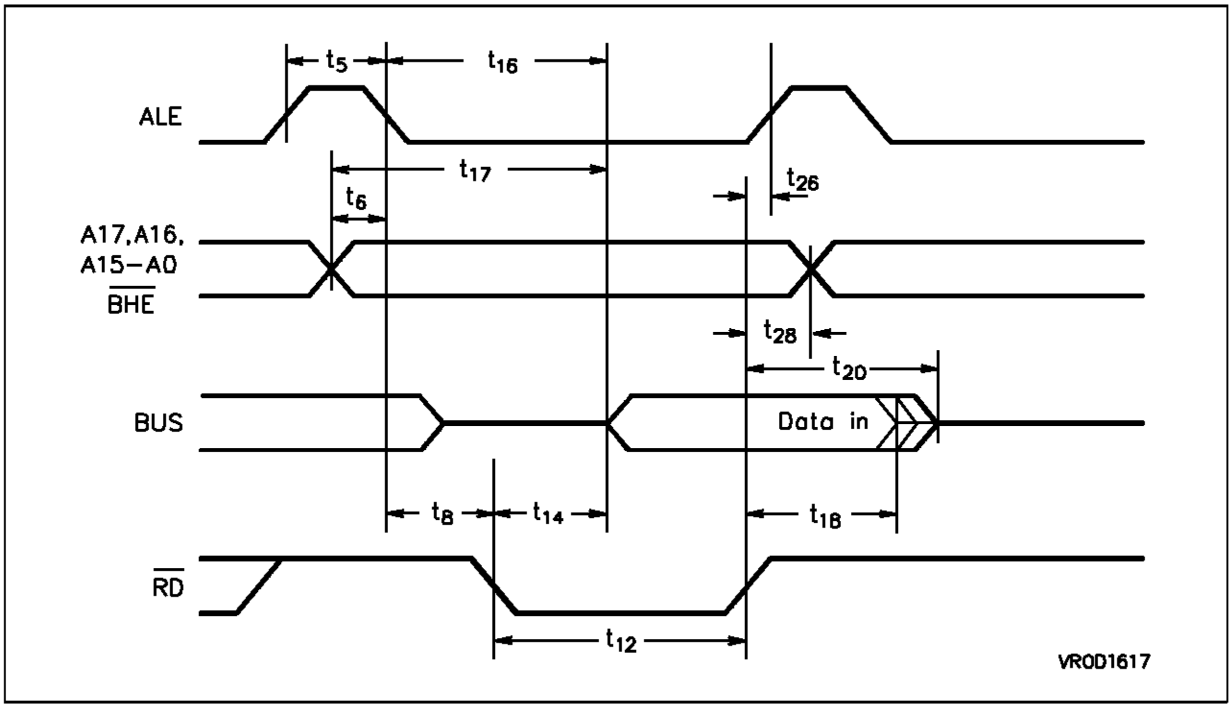
t_5
t_{16}
ALE
t_{17}
t_{26}
t_6
A17,A16,
A15–A0
$\overline{BHE}$
t_{28}
t_{20}
BUS
Data in
t_8
t_{14}
t_{18}
$\overline{RD}$
t_{12}
VR0D1617

Figure 18. External Memory Write Cycle

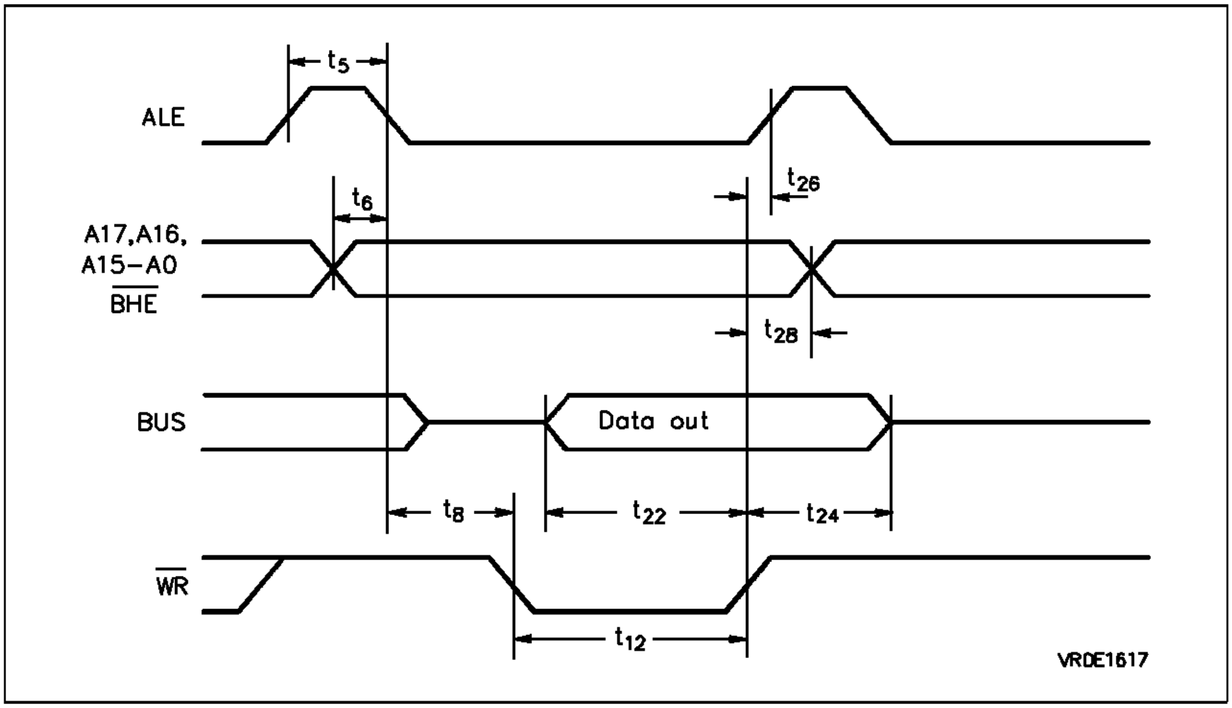
t_5
ALE
t_{26}
t_6
A17,A16,
A15–A0
$\overline{BHE}$
t_{28}
BUS
Data out
t_8
t_{22}
t_{24}
$\overline{WR}$
t_{12}
VR0E1617

AC CHARACTERISTICS (Continued)

Non-Multiplexed Bus without Read/Write Delay

T_A=0 to + 70°C; V_{CC}=5 V ± 10%; V_{SS}=0 V;
C_L (for Ports 0, 1 and 4, ALE, $\overline{RD}$, $\overline{WR}$, $\overline{BHE}$, CLKOUT)=100pF
ALE cycle time = 4TCL (100ns at 20MHz CPU clock)

Symbol	Parameter	CPU Clock 20MHz		Variable Timing 1/TCL = 2 to 40MHz		Unit
		min.	max.	min.	max.	
t_5	ALE High Time	15	-	TCL - 10	-	ns
t_6	Address Setup to ALE	10	-	TCL - 15	-	ns
t_9	ALE Falling Edge to $\overline{RD}$, $\overline{WR}$	- 10	-	- 10	-	ns
t_{13}	$\overline{RD}$, $\overline{WR}$ Low Time	65	-	3TCL - 10	-	ns
t_{15}	$\overline{RD}$ to Valid Data In	-	60	-	3TCL - 15	ns
t_{16}	ALE Low to Valid Data In	-	60	-	3TCL - 15	ns
t_{17}	Address to Valid Data In	-	75	-	4TCL - 25	ns
t_{18}	Data Hold after $\overline{RD}$ Rising Edge	0	-	0	-	ns
t_{21}	Data Float after $\overline{RD}$ *)	-	15	-	TCL - 10	ns
t_{22}	Data Valid to $\overline{WR}$	35	-	2TCL - 15	-	ns
t_{24}	Data Hold after $\overline{WR}$	15	-	TCL - 10	-	ns
t_{26}	ALE rising edge after $\overline{RD}$, $\overline{WR}$	- 10	-	- 10	-	ns
t_{28}	Address Hold after $\overline{RD}$, $\overline{WR}$	0	-	0	-	ns

*) This time may be longer if no external bus conflict can occur. For example, this requirement is always met if only code but no data are accessed externally.

Figure 19. External Memory Read Cycle

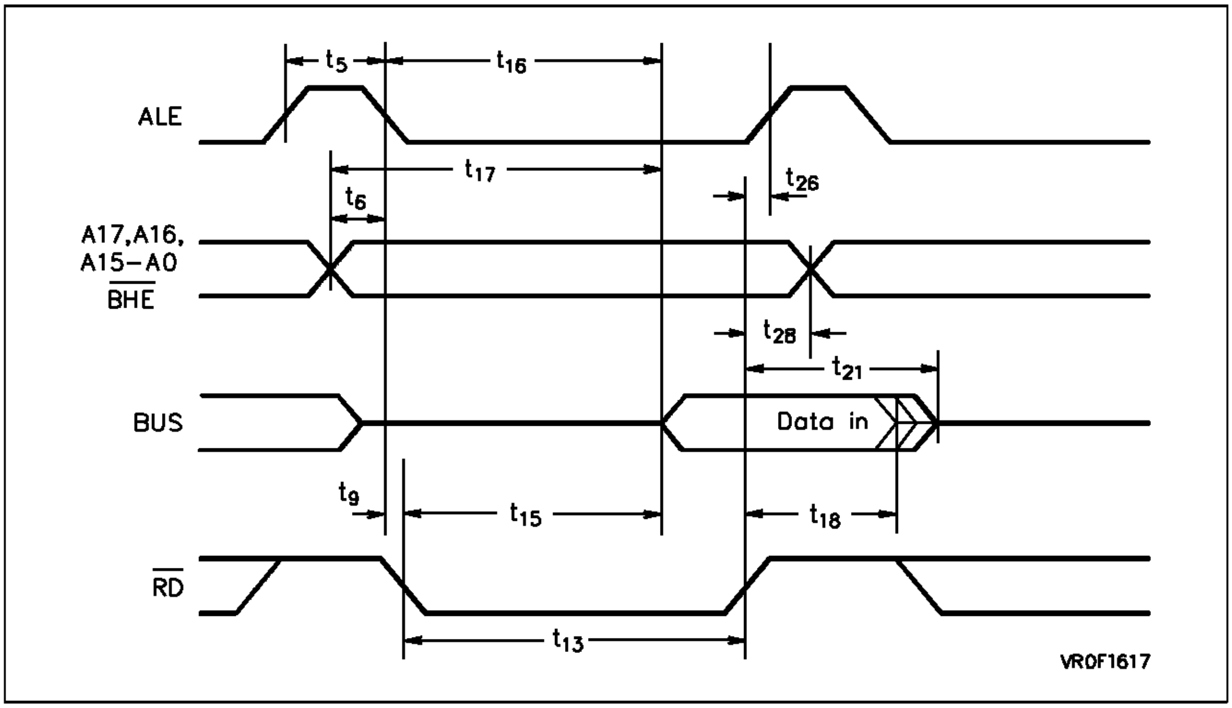
t_5
t_{16}
ALE
t_{17}
t_{26}
t_6
A17,A16,
A15–A0
$\overline{BHE}$
t_{28}
t_{21}
BUS
Data in
t_9
t_{15}
t_{18}
$\overline{RD}$
t_{13}
VR0F1617

Figure 20. External Memory Write Cycle

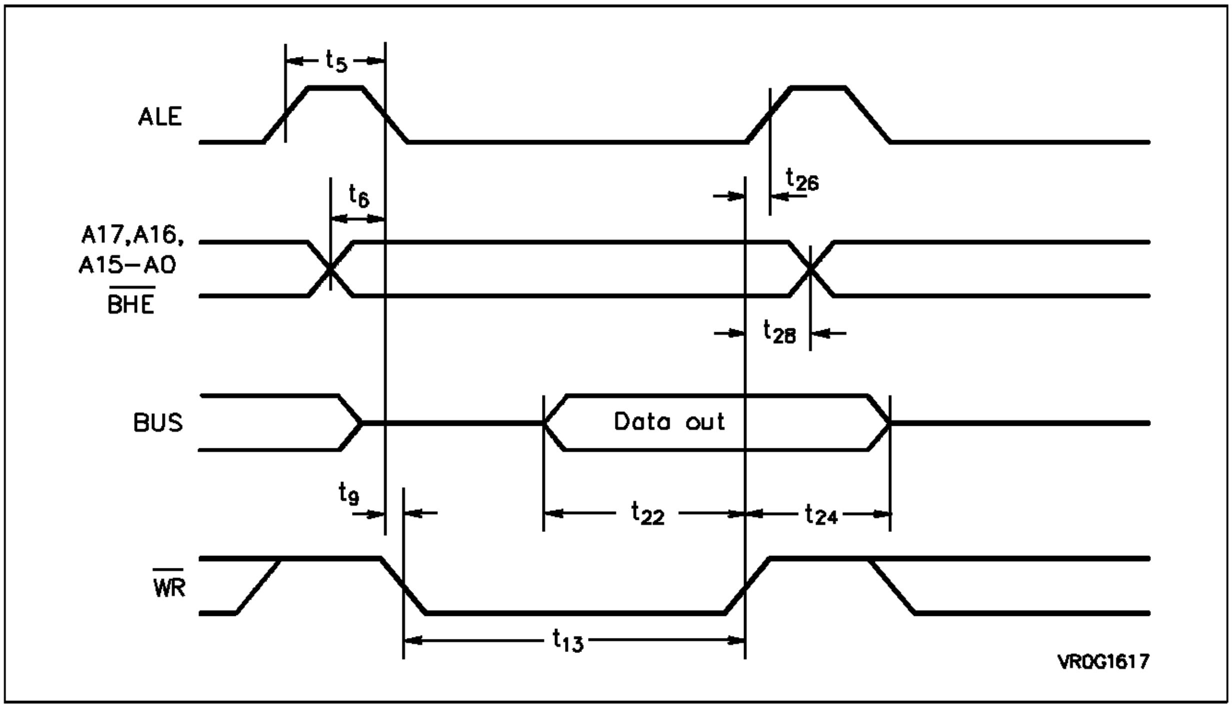
t_5
ALE
t_{26}
t_6
A17,A16,
A15–A0
$\overline{BHE}$
t_{28}
BUS
Data out
t_9
t_{22}
t_{24}
$\overline{WR}$
t_{13}
VR0G1617

PACKAGE MECHANICAL DATA

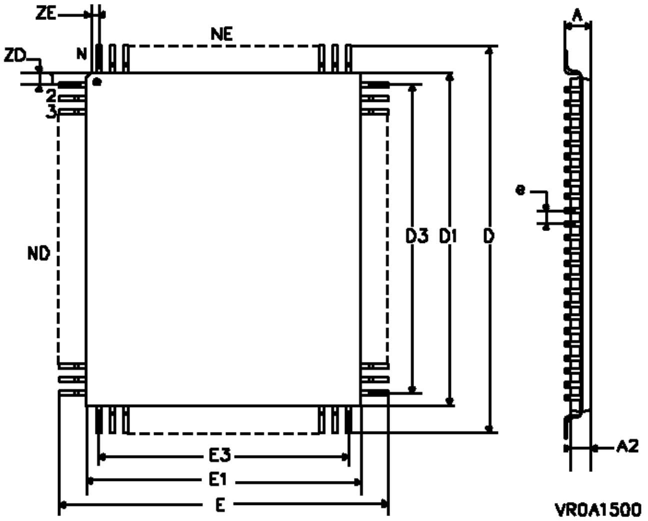

Dim.	mm			inches		
	Min	Typ	Max	Min	Typ	Max
A			3.40			0.134
A2	2.55	2.80	3.05	0.100	0.110	0.120
D	22.95	23.20	23.45	0.904	0.913	0.923
D1	19.90	20.00	20.10	0.783	0.787	0.791
D3		18.85			0.742	
ZD		0.58			0.023	
E	16.95	17.20	17.45	0.667	0.667	0.687
E1	13.90	14.00	14.10	0.547	0.551	0.555
E3		12.35			0.486	
ZE		0.83			0.033	
e		0.65			0.026	
N		100			100	

ORDERING INFORMATION

Sales type	Frequency	Temperature Range	Package
ST10F166AQ1	40MHz	0 to 70°C	PQFP100
ST10F166AQ6		-40 to 85°C	
ST10F166AQ7		-40 to 105°C	
ST10F166BQ1	32MHz	0 to 70°C	PQFP100
ST10F166BQ6		-40 to 85°C	
ST10F166BQ7		-40 to 105°C	
ST10F166CQ1	24MHz	0 to 70°C	PQFP100
ST10F166CQ6		-40 to 85°C	
ST10F166CQ7		-40 to 105°C	

NOTES:

SGS-THOMSON
MICROELECTRONICS

ST10166
ST10R166

16 BIT MCU WITH A/D CONVERTER

PRELIMINARY DATA

- High-Performance 16-bit CPU with 4-Stage Pipeline
- 100ns Instruction Cycle Time at 20MHz CPU Clock
- 500ns Multiplication (16x16 bits), 1µs Division (32/16 bits)
- Enhanced Boolean Bit Manipulation Facilities
- Register-Based Design with Multiple Variable Register Banks
- Single-Cycle Context Switching Support
- 256 Kbyte Linear Address Space for Code and Data
- 1Kbyte On-Chip RAM
- **32 KBYTE ON-CHIP ROM (ST10166 ONLY)**
- 512 byte On-Chip Special Function Register Area
- 8-Channel Interrupt-Driven Single-Cycle Data Transfer Facilities via Peripheral Event Controller (PEC)
- 16-Priority-Level Interrupt System
- 10-Channel 10-bit A/D Converter with 9.75µs Conversion Time
- 16-Channel Capture/Compare Unit
- 2 Multi-Functional General Purpose Timer Units
- 2 Serial Channels (USARTs)
- Programmable Watchdog Timer
- 76 General Purpose I/O Lines
- Temperature Range: 0 to 70 °C, -40 to 85 °C, -40 to 125 °C)
- 1.2 micron multifunctional CMOS technology
- 100 Pin Metric Plastic Quad Flat Pack (PQFP) Rectangular Package

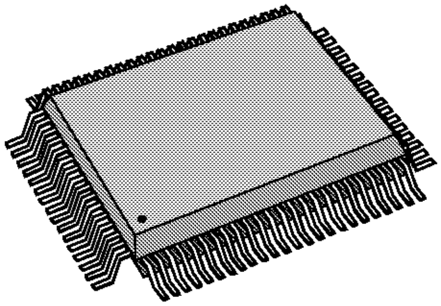

PQFP100

(Ordering Information at the end of the datasheet)

A complete set of development tools is also available including:

- 'C'-Compiler
- Assembler, Linker/Locater
- Librarian
- Emulator
- Starter Kit

This is advance information from SGS-THOMSON. Details are subject to change without notice.

Figure 1. ST10166/ST10R166 Pin Configuration

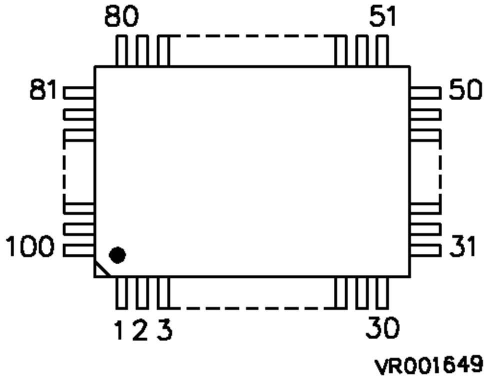

Table 1. PINOUT Description ST10166/ST10R166

Pin number	Pin name	Pin number	Pin name	Pin number	Pin name	Pin number	Pin name
1	P0.3	31	P1.1	51	P5.3	81	P3.1
2	P0.4	32	P1.2	52	P5.4	82	P3.2
3	P0.5	33	P1.3	53	P5.5	83	P3.3
4	P0.6	34	P1.4	54	VAREF	84	P3.4
5	P0.7	35	P1.5	55	VAGND	85	P3.5
6	VSS	36	P1.6	56	P5.6	86	P3.6
7	VCC	37	P1.7	57	P5.7	87	P3.7
8	P0.8	38	VCC	58	P5.8	88	P3.8
9	P0.9	39	VSS	59	P5.9	89	P3.9
10	P0.10	40	P1.8	60	VSS	90	P3.10
11	P0.11	41	P1.9	61	VCC	91	P3.11
12	P0.12	42	P1.10	62	P2.0	92	P3.12
13	P0.13	43	P1.11	63	P2.1	93	VCC
14	P0.14	44	P1.12	64	P2.2	94	VSS
15	P0.15	45	P1.13	65	P2.3	95	P3.13
16	P4.0	46	P1.14	66	P2.4	96	P3.14
17	P4.1	47	P1.15	67	P2.5	97	P3.15
18	VCC	48	P5.0	68	P2.6	98	P0.0
19	XTAL2	49	P5.1	69	P2.7	99	P0.1
20	XTAL1	50	P5.2	70	P2.8	100	P0.2
21	VSS			71	P2.9		
22	$\overline{\text{BUSACT}}$			72	P2.10		
23	EBC1			73	P2.11		
24	EBC0			74	P2.12		
25	ALE			75	P2.13		
26	$\overline{\text{RD}}$			76	P2.14		
27	$\overline{\text{RSTIN}}$			77	P2.15		
28	$\overline{\text{RSTOUT}}$			78	VSS		
29	$\overline{\text{NMI}}$			79	VCC		
30	P1.0			80	P3.0		

ABSOLUTE MAXIMUM RATINGS

Ambient temperature under bias (T_A)	0 to + 70 °C
Storage temperature (T_{ST})	- 65 to + 125 °C
Supply Voltage (V_{CC})	+ 6.5 V
Input Voltage (V_{IN} min. = -3.0 V for pulse width less than 15ns)	- 0.5 to VCC + 0.5 V

Note: Stresses above those listed under “Absolute Maximum Ratings” may cause permanent damage to the device. This is a stress rating only and functional operation of the device at these or any other conditions above those indicated in the operational sections of this specification is not implied.
Exposure to absolute maximum rating conditions for extended periods may affect device reliability.

Note: The ST10166/ST10R166 is also offered in the temperature range -40° to 125°C and -40° to 85°C.
All the following time specifications refer to a CPU clock of 20MHz which is identical to an oscillator frequency (fosc) of 40MHZ.

Symbol	Parameter	Limit Values		Unit	Test Condition
		min.	max.		
V_{IL}	Input Low Voltage	- 0.5	0.2 V_{CC} - 0.1	V	-
V_{IH}	Input High Voltage (all except $\overline{\text{RSTIN}}$ and XTAL1)	0.2 V_{CC} + 0.9	V_{CC} + 0.5	V	-
V_{IH1}	Input High Voltage $\overline{\text{RSTIN}}$	0.6 V_{CC}	V_{CC} + 0.5	V	-
V_{IH2}	Input High Voltage XTAL1	0.7 V_{CC}	V_{CC} + 0.5	V	-
V_{OL}	Output Low Voltage (Ports 0, 1, 4, ALE $\overline{\text{RD}}$, $\overline{\text{WR}}$, $\overline{\text{BHE}}$, CLKOUT, $\overline{\text{RSTOUT}}$	-	0.4	V	I_{OL} = 2.4mA
V_{OL1}	Output Low Voltage (all other outputs)	-	0.4	V	I_{OL1} = 1.6mA
V_{OH}	Output High Voltage (Ports 0, 1, 4, ALE $\overline{\text{RD}}$, $\overline{\text{WR}}$, $\overline{\text{BHE}}$, CLKOUT, $\overline{\text{RSTOUT}}$	0.9 V_{CC} 2.4	-	V	I_{OH} = - 100µA I_{OH} = - 2.4mA
V_{OH1}	Output High Voltage (all other outputs)	0.9 V_{CC} 2.4	–	V V	I_{OH} = - 50µA I_{OH} = - 1.6mA
I_{OZ}	Input Leakage Current (Ports 0, 1,2,3,4, $\overline{\text{NMI}}$, EBC0, EBC1, $\overline{\text{BUSACT}}$)	-	±1	mA	0 V<V_{in}<V_{CC}

DC Characteristics (Continued)

Symbol	Parameter	Limit Values		Unit	Test Condition
		min.	max.		
R_{RST}	Reset Pullup Resistor	50	150	kΩ	-
I_{IL}	XTAL1 Input Current	-	tbd	µA	$0\ V<V_{in}<V_{CC}$
C_{IO}	Pin Capacitance (digital inputs/outputs)	-	10	pF	f= 1MHz $T_A = 25\ °C$
I_{CC}	Power Supply Current	-	180	mA	1/TCL = 40MHz
I_{ID}	Idle Mode Supply Current	-	20	mA	1/TCL = 40MHz
I_{PD}	Power Down Mode Supply Current	-	100	µA	$V_{CC} = 2.5\ V$ 1)

A/D CONVERTER CHARACTERISTICS

$T_A = 0$ to $+ 70\ °C$; $V_{CC} = 5\ V \pm 10\%$; $V_{SS} = 0\ V$; $V_{AREF} = V_{CC} \pm 0.2\ V$; $V_{AGND} = V_{SS} \pm 0.2\ V$

Symbol	Parameter	Limit Values		Unit	Test Condition
		min.	max.		
V_{AIN}	Analog Input Voltage	V_{SS} - 0.2	VCC + 0.2	V	-
C_I	Analog Input Capacitance	-	70	pF	-
t_S	Sample TIme	-	63 TCL		2)
t_C	Converstion Time	-	390 TCL		3)
TUE	Total Unadjusted Error	-	±2	LSB	-
I_{REF}	V_{AREF} Supply Current	-	5	mA	4)
I_{AIN}	Analog Input Current	±500		nA	5)

Notes:

1) This parameter is tested including leakage currents. All inputs (including pins configured as inputs) at 0 V to 0.1 V or at V_{CC} - 0.1 V to V_{CC}, V_{REF} = 0 V, all outputs (including pins configured as outputs) disconnected.

2) This parameter specifies the time during which the input capacitance C_I can be charged/decharged by the external source. It must be guaranteed, that the input capacitance C_I is fully loaded within these 63 TCLs. 63 TCL is 1.575µs at 20MHz CPU clock. After the end of the sample time ts, changes of the analog input voltage have no effect on the conversion result.

3) This parameter includes the sample time t_S. 390 TCL is 9.75µs at 20MHz CPU clock.

4) IREF in Power Down Mode: TBD

5) This parameter specifies the static input current for an analog input channel, e.g. when the channel is not selected for conversion.

AC CHARACTERISTICS

Refer to the ST10F166 Data Sheet for AC characteristics

PACKAGE MECHANICAL DATA

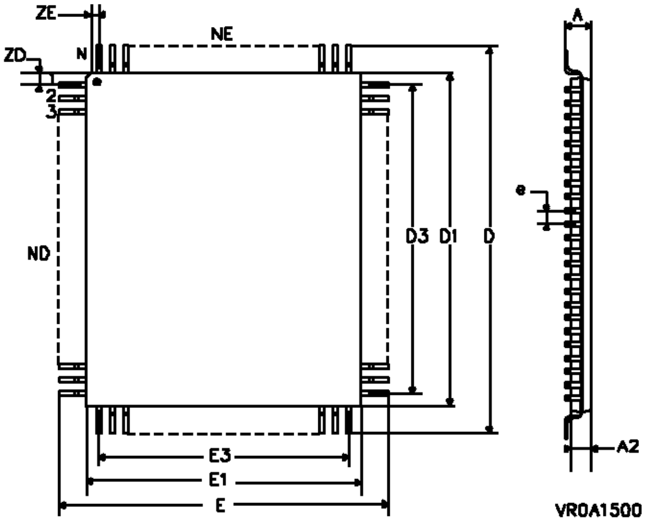

Dim.	mm			inches		
	Min	Typ	Max	Min	Typ	Max
A			3.40			0.134
A2	2.55	2.80	3.05	0.100	0.110	0.120
D	22.95	23.20	23.45	0.904	0.913	0.923
D1	19.90	20.00	20.10	0.783	0.787	0.791
D3		18.85			0.742	
ZD		0.58			0.023	
E	16.95	17.20	17.45	0.667	0.667	0.687
E1	13.90	14.00	14.10	0.547	0.551	0.555
E3		12.35			0.486	
ZE		0.83			0.033	
e		0.65			0.026	
N		100			100	

ORDERING INFORMATION

Sales type	Frequency	Temperature Range	Package
ST10166AQ1	40MHz	0 to 70°C	PQFP100
ST10166AQ6		-40 to 85°C	
ST10R166AQ1	40MHz	0 to 70°C	PQFP100
ST10R166AQ6		-40 to 85°C	
ST10166BQ1	32MHz	0 to 70°C	PQFP100
ST10166BQ6		-40 to 85°C	
ST10R166BQ1	32MHz	0 to 70°C	PQFP100
ST10R166BQ6		-40 to 85°C	
ST10166CQ1	24MHz	0 to 70°C	PQFP100
ST10166CQ6		-40 to 85°C	
ST10R166CQ1	24MHz	0 to 70°C	PQFP100
ST10R166CQ6		-40 to 85°C	

NOTES:

Information furnished is believed to be accurate and reliable. However, SGS-THOMSON Microelectronics assumes no responsability for the consequences of use of such information nor for any infringement of patents or other rights of third parties which may result from its use. No license is granted by implication or otherwise under any patent or patent rights of SGS-THOMSON Microelectronics. Specifications mentioned in this publication are subject to change without notice. This publication supersedes and replaces all information previously supplied.
SGS-THOMSON Microelectronics products are not authorized for use as critical components in life support devices or systems without the express written approval of SGS-THOMSON Microelectronics.

© 1994 SGS-THOMSON Microelectronics - All rights reserved.

Purchase of I^{2}C Components by SGS-THOMSON Microelectronics conveys a license under the Philips I^{2}C Patent. Rights to use these components in an I^{2}C system is granted provided that the system conforms to the I^{2}C Standard Specification as defined by Philips.

SGS-THOMSON Microelectronics Group of Companies

Australia - Brazil - France - Germany - Hong Kong - Italy - Japan - Korea - Malaysia - Malta - Morocco - The Netherlands
Singapore - Spain - Sweden - Switzerland - Taiwan - Thailand - United Kingdom - U.S.A.